MOTION CONTROL
ENGINEERING

ELEMENT TRACTION™ ELEVATOR CONTROL

USER GUIDE

Nidec
All for dreams

MCE
Motion Control Engineering®

Motion Control Engineering
11380 White Rock Road
Rancho Cordova, CA 95742

voice 916 463 9200
fax 916 463 9201
https://acim.nidec.com/elevators/motion-control-engineering

Element Series™
Element Traction™ Elevator Control

Manual # 42-02-2P26, Rev A8 September 2024

Copyright

This document is owned and copyrighted by Motion Control Engineering. All Rights Reserved. Upon request by Motion Control Engineering, this document must be returned to Motion Control Engineering. © Motion Control Engineering 2024.

Trademarks

All trademarks or registered product names appearing in this document are the exclusive property of the respective owners.

Warning and Disclaimer

Although every effort has been made to make this document as complete and accurate as possible, Motion Control Engineering and the document authors, publishers, distributors, and representatives have neither liability nor responsibility for any loss or damage arising from information contained in this document or from informational errors or omissions. Information contained in this document shall not be deemed to constitute a commitment to provide service, equipment, or software by Motion Control Engineering or the document authors, publishers, distributors, or representatives.

Limited Warranty

Motion Control Engineering (manufacturer) warrants its products for a period of 15 months from the date of shipment from its factory to be free from defects in workmanship and materials. Any defect appearing more than 15 months from the date of shipment from the factory shall be deemed to be due to ordinary wear and tear. Manufacturer, however, assumes no risk or liability for results of the use of the products purchased from it, including, but without limiting the generality of the forgoing: (1) The use in combination with any electrical or electronic components, circuits, systems, assemblies or any other material or equipment (2) Unsuitability of this product for use in any circuit, assembly or environment. Purchasers' rights under this warranty shall consist solely of requiring the manufacturer to repair, or in manufacturer's sole discretion, replace free of charge, F.O.B. factory, any defective items received at said factory within the said 15 months and determined by manufacturer to be defective. The giving of or failure to give any advice or recommendation by manufacturer shall not constitute any warranty by or impose any liability upon the manufacturer. This warranty constitutes the sole and exclusive remedy of the purchaser and the exclusive liability of the manufacturer, AND IN LIEU OF ANY AND ALL OTHER WARRANTIES, EXPRESSED, IMPLIED, OR STATUTORY AS TO MERCHANTABILITY, FITNESS, FOR PURPOSE SOLD, DESCRIPTION, QUALITY PRODUCTIVENESS OR ANY OTHER MATTER. In no event will the manufacturer be liable for special or consequential damages or for delay in performance of this warranty.

Products that are not manufactured by MCE (such as drives, CRTs, modems, printers, etc.) are not covered under the above warranty terms. MCE, however, extends the same warranty terms that the original manufacturer of such equipment provide with their product (refer to the warranty terms for such products in their respective manual).

End User License Agreement

This End User License Agreement ("Agreement") grants you the right to use the software contained in this product (the "Software") subject to the following restrictions: You may not: (i) copy the Software, except for archive purposes consistent with your standard archive procedures; (ii) transfer the Software to a third party apart from the entire product; (iii) modify, decompile, disassemble, reverse engineer or otherwise attempt to derive the source code of the Software; (iv) export the Software or underlying technology in contravention of applicable U.S. and foreign export laws and regulations; and (v) use the Software other than in connection with operation of the product.

"LICENSOR'S SUPPLIERS DO NOT MAKE OR PASS ON TO END USER OR ANY OTHER THIRD PARTY, ANY EXPRESS, IMPLIED OR STATUTORY WARRANTY OR REPRESENTATION ON BEHALF OF SUCH SUPPLIERS, INCLUDING BUT NOT LIMITED TO THE IMPLIED WARRANTIES OF NON-INFRINGEMENT, TITLE, MERCHANTABILITY OR FITNESS FOR A PARTICULAR PURPOSE."

Important Precautions and Useful Information

This preface contains information that will help you understand and safely maintain MCE equipment. We strongly recommend you review this preface and read this manual before installing, adjusting, or maintaining Motion Control Engineering equipment. This preface discusses:

- Safety and Other Symbol Meanings
- Safety Precautions
- Environmental Considerations
- In this manual

Safety and Other Symbol Meanings

Danger

This manual symbol is used to alert you to procedures, instructions, or situations which, if not done properly, might result in personal injury or substantial equipment damage.

Caution

This manual symbol is used to alert you to procedures, instructions, or situations which, if not done properly, might result in equipment damage.

Note

This manual symbol is used to alert you to instructions or other immediately helpful information.

Safety Precautions

Danger

This equipment is designed to comply with ASME A17.1, National Electrical Code, CE, and CAN/CSA-B44.1/ASME-A17.5 and must be installed by a qualified contractor. It is the responsibility of the contractor to make sure that the final installation complies with all local codes and is installed in a safe manner.

This equipment is suitable for use on a circuit capable of delivering not more than 10,000 rms symmetrical amperes, 600 volts maximum. The three-phase AC power supply to the Drive Isolation Transformer used with this equipment must originate from a fused disconnect switch or circuit breaker sized in conformance to all applicable national, state, and local electrical codes in order to provide the necessary motor branch circuit protection for the Drive Unit and motor. Incorrect motor branch circuit protection will void the warranty and may create a hazardous condition.

Proper grounding is vitally important to safe and successful operation. Bring your ground wire to the system subplate. You must choose the proper conductor size and minimize the resistance to ground by using the shortest possible routing. See National Electrical Code Article 250 or the applicable local electrical code.

Before applying power to the controller, physically check all the power resistors and other components located in the resistor cabinet and inside the controller. Components loosened during shipment may cause damage.

For proper operation of the AC Drive Unit in your controller, you must make sure that: 1) A direct solid ground is provided in the machine room to properly ground the controller and motor. Indirect grounds such as the building structure or a water pipe may not provide proper grounding and could act as an antenna to radiate RFI noise, thus disturbing sensitive equipment in the building. Improper grounding may also render any RFI filter ineffective. 2) The incoming power to the controller and the outgoing power wires to the motor are in their respective, separate, grounded conduits.

This equipment may contain voltages as high as 1000 volts. Use extreme caution. Do not touch any components, resistors, circuit boards, power devices, or electrical connections without ensuring that high voltage is not present.

Environmental Considerations

- Keep the machine room clean.
- Controllers are generally in NEMA 1 enclosures.
- Do not install the controller in a dusty area.
- Do not install the controller in a carpeted area.
- Keep room temperature between 32 and 104° F (0 to 40° C).
- Prevent condensation on the equipment.
- Do not install the controller in a hazardous location or where excessive amounts of vapors or chemical fumes may be present.
- Make certain that power line fluctuations are within plus or minus 10% of proper value.

Air Conditioned Equipment Cabinets

If your control or group enclosure is equipped with an air conditioning unit, it is very important to observe the following precautions. (Failure to do so can result in moisture damage to electrical components.)

- Maintain the integrity of the cabinet by using sealed knockouts and sealing any holes made during installation.
- Do not run the air conditioning while the cabinet doors are open.
- If you turn the air conditioner off while it is running, wait at least five minutes before restarting it. Otherwise, the compressor may be damaged.
- Observe the recommended thermostat setting (75 degrees) and follow recommended maintenance schedules.
- Make certain that the air conditioning drain tube remains clear to avoid water accumulation in the unit.

In This Manual:

This is the installation, adjustment, and troubleshooting guide for the Element traction controller. When viewed online as a pdf file, hyperlinks (buttons or blue text) link to related topics and informational websites. The manual includes:

- Contents: Table of Contents. When viewed online as a pdf file, hyperlinks in the Contents link to the associated topic in the body of the manual.
- Section 1. Installation
- Section 2. Configuration and Troubleshooting
- Section 3. Maintenance Plan Information
- Index: Alphabetical index to help you find information in the manual. When viewed online as a pdf file, index entry page references are hyperlinks to the associated information in the body of the manual.

Contents

Important Precautions and Useful Information **1-iv**
Safety and Other Symbol Meanings 1-iv
Safety Precautions 1-iv
Environmental Considerations 1-v
Air Conditioned Equipment Cabinets 1-v
In This Manual: **1-vi**

Section 1. Installation

Installation **1-1**
Element Controls **1-2**
Safety **1-4**
Personal Safety 1-4
Equipment Safety 1-4
Specifications **1-5**
Operating Mode Definitions 1-7
Non-Automatic Modes 1-7
Cartop Inspection. 1-7
Car Panel Inspection 1-7
Hoistway Access Inspection 1-7
Machine Room Inspection 1-7
Construction Operation. 1-8
Attended Modes. 1-8
Independent Service 1-8
Fire Service Phase II 1-8
Automatic Modes of Operation 1-8
Passenger Mode 1-8
Capture for Test (Pretest) 1-8
Test Mode 1-9
Recall 1-9
Emergency Modes of Operation. 1-9
Dynamic Braking Transistor Failure (DBTRF). 1-9
Fire Recall 1-9
Earthquake Operation 1-9
Pit Flood Operation 1-9
Emergency Power Operation 1-10
Emergency Dispatch Operation 1-10
Learn Modes 1-10
Hoistway Learn (Landing System Learn) 1-10
Terminal Switch Learn 1-10
User Interface **1-11**
Home Screen 1-11

Mode of Operation 1-12
Faults and Safety 1-12
System Status 1-12
Menu Overview 1-13
Component Identification 1-17
Installation 1-20
Installation Checklist 1-20
Enclosure Installation 1-20
Grounding 1-20
Check for Shorts to Ground 1-21
AC Power, Motor, Brake 1-21
Wire Separation 1-21
Initial Power Check 1-21
Machine Room Construction Run 1-22
Construction Run: Cartop 1-22
Required Drive Settings 1-23
Magnetek HPV900 Series 2 1-23
TORQMAX F5, v3.21 1-24
Full Drive Parameters 1-24
Required Controller Settings 1-25
Brake Pick and Hold Voltages (SCE-BRK board R3 and up) 1-25
Brake Faults 1-25
Brake Transformer Information 1-26
Initial Speed Calibration 1-26
Magnetek 1-26
TORQMAX 1-26
LS-EDGE Landing System 1-27
Tape Installation 1-28
Top and Bottom Hangers 1-28
Bottom Hanger 1-29
LS-EDGE Broken Tape Switch 1-30
Tape Hanging 1-30
Tape Tension 1-30
Sensor Installation 1-31
Sensor Alignment 1-31
Door Zone Magnets 1-32
Top Terminal, Bottom Terminal and ETS Magnets 1-33
Install the Top Terminal Magnets 1-33
Install the Bottom Terminal Magnets 1-34
ETS/ETSL magnets and/or switches 1-34
Electrical Connection 1-34
Parameter Settings 1-35
Hoistway Learn 1-35
Offset 1-35
LS-EDGE Indicators 1-35
LS-RAIL Landing System 1-36
Mounting Pedestal 1-37
Electrical Connections 1-38
Diagnostic LEDs 1-38

Hoistway Limits and Slowdowns 1-38
Virtual Switches 1-38
Door Zone Magnets 1-39
To mount the door zone magnets: 1-39
Terminal Magnets 1-40
Top and Bottom Terminal 1-40
Install the Top Terminal Magnets 1-40
Install the Bottom Terminal Magnets 1-41
ETS/ETSL magnets and/or switches 1-41
Parameter Settings 1-41
Hoistway Learn 1-41
Offset 1-41
Landing System Troubleshooting Tools 1-41
Door Zone Verification 1-41
Indicators 1-42
Permanently Attach Magnets 1-42
Serial Hall and Car Call Boards 1-43
Hall Calls 1-43
General Installation 1-43
Addressing and CAN Bus Termination 1-44
Riser Assignment 1-44
Floor Number and Front or Rear Opening 1-44
Baud Rate 1-44
CAN Bus Termination 1-44
On Board Diagnostics 1-45
ON LED 1-45
(FLT) FAULT LED 1-45
Inventory 1-45
SC-3HN-2 Hall Calls 1-46
General Installation 1-46
Addressing and CAN Bus Termination 1-47
Riser Assignment 1-47
Floor Number and Front or Rear Opening 1-47
Baud Switch 1-47
CAN Bus Termination 1-47
On Board Diagnostics 1-48
ON LED 1-48
(FLT) FAULT LED 1-48
Inventory 1-48
Serial Car Call Board 1-49
Installation Instructions 1-49
Lanterns and PIs 1-52
Serial PI Configuration 1-52
Door Operator 1-53
Door Position Monitor Switch 1-53
Load Weigher 1-53
Traction Elevator Adjustment 1-54
Counterweight Position 1-54
Brake Coordination 1-54
Hoistway Learn (Landing System Learn) 1-55

Tuning 1-55
Magnetek HPV 900 Series 2 1-55
TORQMAX F5 1-55
Drive Response 1-56
Tuning 1-57
S-Curve 1-57
One Floor Run 1-58
Contract Speed Operation 1-58
Magnetek 1-58
TORQMAX 1-58
Relevel Operation 1-58
Terminal Switch Configuration 1-59
Terminal Switch Learn 1-60
NTS/ETS Switches with Full Stroke Buffers 1-60
Virtual NTS/ETS (Landing system position count) 1-60
Physical ETS (Cam-operated switches) 1-60
ETS-LS (Magnets detected by the landing system) 1-61
NTS/ETSL Switches with Reduced Stroke Buffers 1-61
ETS-LS (Magnets detected by the landing system) 1-61
Virtual NTS/ETSL (Landing system position count) 1-61
Physical ETSL (Cam-operated switches) 1-61
Adjustment Problems 1-62
Performance and Ride Quality 1-62
TORQMAX 1-62
Magnetek HPV S2 1-62
Speed Changes Felt Excessively in Car 1-63
Car Overshoots or Motor Overload/Overvolt 1-63
Car Oscillates at Contract Speed 1-63
Electrical Noise 1-63
Duplex Operation 1-64
Interconnect 1-64
Power Phasing 1-64
Traction Acceptance Tests 1-65
Manual Tests 1-65
Safety String Test 1-65
SAFH Safety String Test 1-65
SAFC Safety String Test 1-65
Motor Contactor Proofing Test 1-65
Car Stopped at Floor 1-65
Car in Motion 1-65
Brake Contactor Proofing Test 1-66
Car Stopped at Floor 1-66
Car in Motion 1-66
Ascending Car Overspeed Test 1-66
Emergency Brake Test - Unintended Motion, Rope Brake 1-66
Automated Tests 1-67
Prepare drive for overspeed test 1-67
Car/CWT safety 1-68
Car/CWT buffer 1-68
Electrical Governor 1-69

Inspection Overspeed 1-69
Contract Overspeed 1-70
Leveling Overspeed Test 1-70
Emergency Terminal Switch Overspeed Test 1-71
Switch Overspeed Tests. 1-72
NTS1 SWITCHES – LOWER OVERSPEED 1-72
NTS1 SWITCHES – UPPER OVERSPEED. 1-73
NTS2 SWITCHES – LOWER OVERSPEED. 1-73
NTS2 SWITCHES – UPPER OVERSPEED 1-74
Passcode (Restricted Mode) 1-76
Backup the Parameter Settings 1-76

Section 2. Configuration and Troubleshooting

In this Section 2-1
Using the Touch Screen/OBD 2-2
Home 2-2
Shortcuts 2-4
Screen Descriptions 2-5
Web Browser Access 2-29
Web Setup 2-29
Access 2-29
USB Parameter Transfer 2-29
Event Log Archive/Email 2-30
USB Archive 2-30
Ethernet Archive 2-30
Email 2-30
Troubleshooting Reference 2-31
Bus Voltage Testpoints and Fuse Locations 2-31
Touch Screen Tools 2-32
System I/O 2-32
System Diagnostics 2-32
SPA, SPB, SPC, PLD Diagnostics 2-32
SPA Diag 2-32
SPB Diag 2-32
SPC Diag 2-32
PLD Diag. 2-32
Action Info 2-33
Status Info 2-33
Stats. 2-33
Scope 2-33
Circuit Board Descriptions 2-34
MC-CPI-2. 2-35
CPI-2 Configuration. 2-36
SC-3HN or SC-3HN-2 Serial Hall Call Node Board. 2-36
SCE-BRK Brake Control Board 2-37
Brake Transformer. 2-37
SCE-CON Board. 2-38

SCE-CPU 2-40
CPU Switches, Interface 2-41
Updating System Software 2-43
Replacing the SCE-CPU Board 2-44
SCE-HVI 2-47
Door Operator Compatibility 2-49
SCE-UPD 2-50
Event and Fault Message Descriptions 2-52
Event Log Viewing 2-93
Touch Screen Log Access 2-93
Filtering 2-93
PC Log Access 2-93

Section 3. Maintenance Plan Information

In this section 3-1
Maintenance Intervals 3-1
Controller 3-2
Monthly 3-2
Controller General 3-2
Air Conditioned Cabinets 3-2
Load Weighers 3-2
MCE Isolated Platform 3-2
Lead/Acid Batteries 3-2
Car 3-2
Every Six Months 3-3
Controller General 3-3
Air Conditioned Cabinets 3-3
Load Weighers 3-3
Lead/Acid Batteries 3-3
Car 3-3
Landing System 3-3
Power Supplies 3-3
Brake 3-3
Yearly 3-4
Controller General 3-4
Air Conditioned Cabinets 3-4
Load Weighers 3-4
Lead/Acid Batteries 3-4
Board-mounted Batteries 3-4
Car 3-4
Landing System 3-4
Power Supplies 3-4
Brake 3-4
Rope Gripper 3-4
SmarTraq Door Operator 3-5
Door Closing Force 3-5
TAPS, Traction Auxiliary Power Supply 3-10
Functional Test 3-10

Installation

In this section:

- Element Controls, page 1-2
- Safety, page 1-4
- Specifications, page 1-5
- Operating Mode Definitions, page 1-7
- User Interface, page 1-11
- Component Identification, page 1-17
- Installation, page 1-20
- Machine Room Construction Run, page 1-22
- Landing System, page 1-27
- Serial Hall and Car Call Boards, page 1-43
- Door Operator, page 1-53
- Load Weigher, page 1-53
- Traction Elevator Adjustment, page 1-54
- Emergency Terminal Switch Configuration, page 1-59
- Duplex Operation, page 1-64
- Traction Acceptance Tests, page 1-65
- Passcode, page 1-76

Element Controls

Element elevator controls are available for hydraulic or traction applications.

- **Traction Applications**
  - Up to 16 floors
  - Single, in-line openings
  - Magnetek HPV 900 Series 2 or M1000 drive, TORQMAX F5
  - Up to 350 FPM
  - AC geared machines
  - Open or Closed Loop operation
  - Simplex or Duplex dispatching
  - One car operating panel per car (two if wired in parallel)
  - Serial hall calls
  - Serial car calls
  - MCE LS-EDGE landing system, or
  - MCE LS-RAIL landing system
  - Load Weigher: Strain gauge, discrete
- **User Interface**
  - On-board, touch screen (OBD) configuration
  - Web browser access
  - USB thumb drive for software update, parameter transfer, or event log download
  - Micro SD card event storage and program backup
- **Supported Door Operators**
  - MCE Universal Door Control (Interface)
  - MCE SmarTraq
  - MCE Profile
  - ECI 895
  - ECI 1000
  - ECI 2000
  - ECI VFE2500
  - GAL MOD (220V only)
  - GAL MODHFL
  - GAL MONXT
  - GAL MOVFR (220V only)
  - GAL MOVFE 2500 (220V only)
  - MAC PMSSC
  - OTIS AT400
  - TKE/DOVER HDLM

Figure 1.1 Element Traction Control

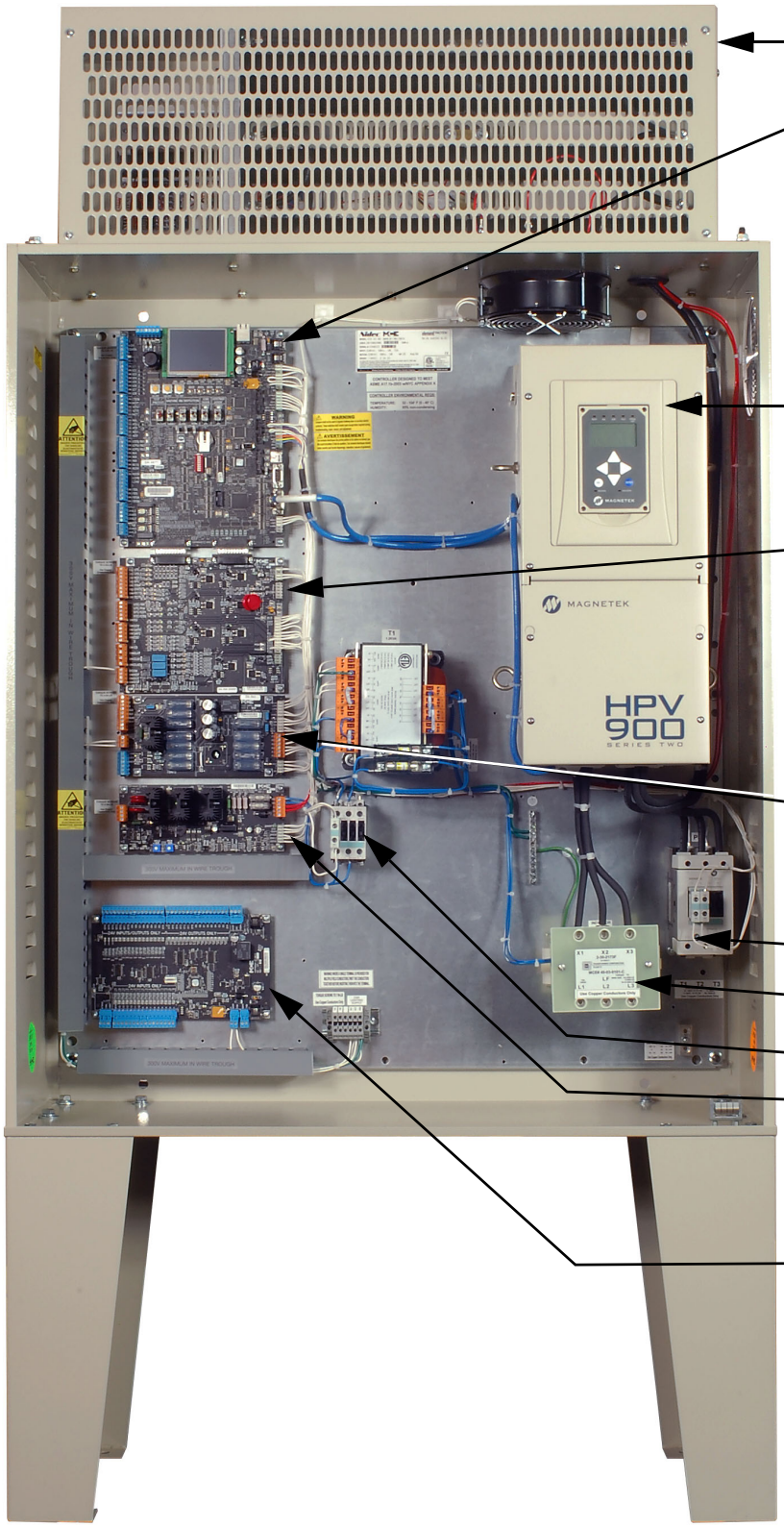

Braking resistor cabinet

SCE-CPU:
3.5 "color touch screen
Capture/Test controls
Machine Room Inspection
Car/Hoistway Door Bypass
EQ reset
UIM reset
FAULT reset
Drive control
Elevator logic

AC drive. May be:
TORQMAX/KEB F5
Magnetek HPV 900 S2,
Magnetek M1000

SCE-HVI:
Normal slowdowns
Terminal switches
Safety string
Door locks
Rope brake
Brake control
Motor contactor
Brake contactor

SCE-UPD:
Bus fusing
Power distribution
Touch safe design

Motor Contactor

AC Choke

Brake Contactor

SCE-BRK:
Brake control
Current limited
Fused contact
Monitoring

MC-CPI: (optional)
Additional I/O and/or
Card Reader Security

Input power:
208 - 480 VAC,
50/60 Hz, 3 Phase

Enclosure dimensions: *
44"H x 34"W x 11"D or
54.5"H x 36"W x 14"D

*** Note:** Dimensions include Braking Resistor enclosure mounted on top of the controller. Floor mounting kit (optional) adds 18" to the total height of the controller.

Safety

Certain fundamental warnings must be kept in mind at all times to help avoid accidental death, severe personal injury, or equipment damage.

Personal Safety

- Controllers may only be installed by qualified, licensed, trained elevator personnel familiar with the operation of microprocessor-based elevator controls.
- Verify safety devices (limits, governors, hoistway locks, car gate, etc.) are fully functional before running the elevator. Never operate controls with any safety device inoperative.
- The user is responsible for complying with the current National Electrical Code with respect to the overall installation of equipment and proper sizing of electrical conductors.
- The user is responsible for understanding and applying all current local, state, provincial, and federal codes that govern practices such as controller placement, applicability, wiring protection, disconnections, over-current protection, and grounding procedures.
- Controller equipment is at line voltage when AC power is connected. Never operate controls with covers removed from drive or brake controls.
- After AC power has been removed, internal capacitors can remain charged for up to 5 minutes. Wait at least 5 minutes after power down and check for live circuits before touching any components.
- Verify no remaining voltage on the large inductor below the drive. Short to ground to discharge if required.
- To reduce the risk of shock, all equipment should be securely grounded to earth ground. Failure to obtain an actual earth ground may result in electrical shock to personnel.
- Provide equipment grounding in accordance with local code and NEC Article 250.
- When using test equipment (oscilloscopes, etc.) with a power cord that electrically ties probe common to earth ground, an isolation transformer should be used to isolate the instrument common from earth ground.
- Remain clear of all rotating equipment while working on the controls.

Equipment Safety

- Provide equipment grounding in accordance with local code and NEC Article 250. Failure to obtain a true earth ground may result in electrical shock. Improper grounding is the most common cause of electrical component failure and noise-induced problems.
- Replace components only with main line power off. Damage to equipment or unexpected operation of the elevator may occur if this precaution is not observed.
- Do not substitute or modify parts. MCE will not be responsible for modifications made in the field unless they are approved in writing by MCE.
- Circuit boards believed to be defective must be sent to MCE for repair and testing. Field repair may leave the board with undetected problems.
- Care should be taken when using test leads and jumpers to avoid shorting high voltage or ground to low voltage microprocessor circuits.
- Do not allow dust, carbon, or metallic particles to accumulate on any part of the control.
- Avoid vibration, shock, high humidity, high ambient temperature, and caustic fumes.

Specifications

This section lists specification and feature set information for traction installations.

- Environmental and Power Input
- Standardization and Code Compliance
- Operating Modes
- Operating Mode Definitions, page 1-7

Table 1.1 Environmental and Power Input

Topic	Description
Enclosures	NEMA 1 standard, others available
Temperature	32 to 104° F, 0 to 40° C
Humidity	To 95% non-condensing
Altitude	To 10,000 feet (3000 meters), drive derating per manufacturer
Power Input	Power Input: 208 - 480 VAC, 50/60 Hz, 3 phase

Table 1.2 Standardization and Code Compliance

Topic	Description
Safety Codes (Fire Codes)	- ASME A17.1/CSA B44 2016 - ASME A17.1/CSA B44 (2007 to 2013) - ASME A17.1a/CSA B44S1 2005 - ASME A17.1/CSA B44 2004 - ASME A17.1/CSA B44 2000 W/Add - ASME A17.1-1996 with addenda - Massachusetts - New York City
Special Needs	2010 ADA Standards
Electrical	NEC, U.S., CSA B44.1/ASME A17.5
Pollution	UL508C
Emissions	EN12016

Table 1.3 Operating Modes

Topic	Description
Simplex	Single car, integrated dispatching
Duplex	Two cars, both with integrated dispatching capability but with one car assuming dispatching control for both
Call Response	Selective Collective automatic service
Automatic Operation	Passenger/normal Test (contract speed operation without door opening) Pretest (no hall call response, car recalls to capture floor after servicing car calls)
Attended Operation	Independent service In-car fire service (Fire Phase 2)
Inspection Operation	Cartop inspection Car panel inspection Hoistway access inspection Machine room inspection

Table 1.3 Operating Modes

Topic	Description
Construction Fault Bypass	Faults bypassed operation using run box or inspection controls. See Faults Bypass note.
Inspection Fault Bypass	Faults bypassed operation using inspection controls. See Faults Bypass note.
Automatic Fault Bypass	Faults bypassed operation in Automatic mode. See Faults Bypass note.
Emergency Operation	Fire service (ASME A17.1/CSA B44) NYC Appendix K Massachusetts (2004) EN81-72 (2003) Australia (1986, requires START input) New Zealand (1997, requires START input)
Earthquake Operation	ASME A17.1/CSA B44 Seismic detection
Hall Call Loss (Emergency Dispatch)	See Emergency Dispatch Operation on page 1-10. May be initiated by input from external device if programmed.
Flood	Pit Flood (access blocking to one or more lower floors only)
Emergency Power	MCE TAPS battery rescue optional, building generator I/O standard
Load Response (discrete load weigher only)	Light load Heavy load/Lobby departure Standard overload Fire Phase 2 overload (ANSI A17.1/CSA B44)
Anti-Nuisance	Car call cancel on direction reversal Cancel car calls behind car Photo eye/designated number of stops without Photo eye activation before car call cancellation Load weigher/if the load weigher light load input (LLI) is on, and registered car calls exceeds the number entered here, all car calls will be cancelled.
Thermal overload	Condition must be corrected or self-correct before car can return to service.

Note

FAULTS BYPASS: See Touch Screen Event Listings on page 2-52. Each fault or event lists which fault bypass operating modes will prevent that fault. Construction blocks the greatest number of faults, Inspection next, then Automatic. Automatic mode fault bypass is on a two hour timer.

Operating Mode Definitions

This section describes non-automatic modes, attendant modes, automatic modes, emergency, and learn modes of operation.

Non-Automatic Modes

Non-automatic modes include:

- Cartop Inspection, page 1-7
- Car Panel Inspection, page 1-7
- Hoistway Access Inspection, page 1-7
- Machine Room Inspection, page 1-7
- Construction Mode, page 1-8
- Learn Modes, page 1-10

In any of these modes, the car is manually operated and will not respond to building demand of any type. Position indicators and passenger annunciators will be disabled. If fire service is activated during a non-automatic mode, audible and visible annunciators will activate to alert the elevator technician but the car will not automatically exit the non-automatic mode.

Cartop Inspection Cartop Inspection has the highest priority of the inspection modes. When it is active, the car will not operate from any other inspection station.

A switch located in the cartop inspection station places the car on cartop inspection. When this switch is activated, automatic car and door operation are immediately terminated. Doors in transit when cartop inspection is activated will immediately stop. Additional constant-pressure switches on the cartop allow the car to be moved at inspection speed (not to exceed 150 fpm).

Car Panel Inspection Car panel Inspection has the second highest priority of the inspection modes. When it is active, the car will not operate in Hoistway Access or Machine Room inspection.

A switch located in the car operating panel places the car on car panel inspection. When this switch is activated, automatic operation is immediately terminated. Doors in transit when car panel inspection is activated will immediately stop. While on car panel inspection, door operation requires constant-pressure operation of door open/close buttons. Additional constant-pressure switches allow the car to be moved at inspection speed (not to exceed 150 fpm).

Hoistway Access Inspection At both top and bottom access hall stations, a three-position, key operated switch allows the car to be moved to gain top or bottom access. The car will move with car and hall doors open at the affected landing. If doors are in transit when hoistway access is initiated, they will stop immediately.

Machine Room Inspection Machine room inspection has the lowest priority of the inspection modes.

A switch located in the elevator controller cabinet places the car on machine room inspection. When this switch is activated, automatic car and hall door operation are immediately terminated. Doors in transit when inspection is activated will immediately stop. Additional constant-pressure switches allow the car to be moved at inspection speed (not to exceed 150 fpm).

Construction Operation Construction operation is for use when all hoistway equipment may not yet be installed. On Construction operation, the car is moved using cartop or machine room inspection inputs. To enter construction operation:

- The INSP/NORM switch on the CPU board must be in INSP position.
- The FLT BYPASS jumper just below the CPU board MACHINE RM INSPECTION switches must be in the BYPASS position.
- On the Utils (Utilities) tab > Construct and Bypass Faults Menu, enable Construction Fault Bypass.

To bypass door faults on Construction operation:

- Set the SCE-CPU board Car and Hoistway Door Bypass switches to BYPASS.

Attended Modes

Attended modes include Independent operation and fire service phase II operation.

Independent Service When independent service is initiated, all existing car calls are immediately canceled and the elevator is removed from hall call service. With the car stopped in a door zone, if car doors are open, they will remain open; if closed, they will open. During independent service the car is controlled by car calls.

Upon arriving at a call, the elevator doors open and will remain open until the attendant closes the doors using constant pressure on the door close button or on a car call button. Hall and jamb mounted arrival fixtures are inoperative.

Fire Service Phase II When the car is placed on fire service phase II (in-car firefighter) operation, the elevator will operate according to the applicable local safety code. For example, A17.1 code:

- Constant pressure on the door close button initiates door closing.
- Registration of a destination call and pressing door close button initiates door closing.
- When exiting Fire Phase II and the car arrives at the fire recall floor, doors open automatically.

Automatic Modes of Operation

Automatic modes include passenger mode, capture for test (pretest), and test modes.

Passenger Mode During passenger mode, the car responds to hall and car calls under selective-collective operation. Passenger mode is the default mode of operation and is active so long as no other mode is selected.

Capture for Test (Pretest) When placed in Pretest mode, the car is taken out of hall call service and arrival annunciators disabled. Remaining car calls will be served and new car calls may be placed but, when the car completes servicing car calls, it will recall to the designated Capture floor or remain at the last floor served; door action as programmed.

Capture operation is overridden by all modes except passenger operation.

Test Mode It is the responsibility of maintenance personnel to be certain that the elevator is empty before entering test mode. In test mode, the elevator doors will remain closed. The car runs at contract speed, responding to car calls placed through the controller touch screen.

Recall Four general purpose recall inputs are provided. Each is independently configurable. See Recall Switches on page 2-15.

Emergency Modes of Operation

Emergency modes of operation include:

- Fire Recall, page 1-9
- Earthquake Operation, page 1-9
- Pit Flood Operation, page 1-9
- Emergency Power Operation, page 1-10
- Emergency Dispatch Operation, page 1-10
- Dynamic Braking Transistor Failure

Dynamic Braking Transistor Failure (DBTRF) In case of a malfunction of the braking transistor integrated in the drive, the car will cancel all calls and stop at the next available landing. Once it has stopped, it will open its doors to allow the passengers to get out; after this the power will be removed from the drive.

Note

This fault is not bypassed in any mode of operation. This fault is maintained over a power cycle and through any mode change. Drive must be changed before the fault is reset. The fault can only be reset by activating the Machine Room inspection and pressing the Fault Reset button for 5 seconds.

Fire Recall Fire recall operation (Fire Phase I) recalls the elevator to a designated fire recall floor (main or alternate) and removes it from passenger operation. Fire recall can be initiated by smoke detectors or by a fire recall switch. To disable fire service, confirm spare input FR1 ON and spare outputs FR1 BUZR and FR HAT are not configured.

At the recall floor, the car will wait with doors closed or open (as configured). The car may enter fire phase II operation automatically or by activation of a key switch inside the car.

Earthquake Operation Earthquake operation affects all automatic modes of operation. When a seismic input becomes active, the car will immediately stop and determine if it is appropriate to allow the elevator to move at reduced speed in accordance with the earthquake restrictions of the jurisdiction.

Pit Flood Operation If a flooded pit is detected and pit flood is activated, the car will be prevented from servicing one or more lower floors (depending on job site configuration of the controller).

Emergency Power Operation Emergency power operation, if provided, is activated when normal power loss is detected. Emergency power may be provided by a building generator or by a battery powered rescue device.

If power is provided by a generator, the car will pause until generator power is stable and then recall to a designated floor and open its doors for passenger exit. If the generator has sufficient power, one or more cars may be configured to run on emergency power.

If power is provided by the MCE Traction Auxiliary Power Supply (TAPS), the auxiliary power supply provides three phase backup power, directs the controller to move the car safely to a landing, and provides power to open the elevator doors. If the elevator controller chooses a direction that draws power beyond a customer-preset level, the system will direct the controller to pause the car, then reverse direction to the nearest landing, again providing power to open the doors and allow passengers to exit.

Emergency Dispatch Operation If a communications failure prevents hall calls from being registered, the car will enter emergency dispatch operation. In this mode, car calls at unsecured eligible floors are automatically registered starting at the current PI and current direction (or up direction if the car was idle). The car serves even floors in the up direction and odd floors in the down. The lobby and terminal floors (or lowest/highest unsecured eligible floor) are served in both directions. A full cycle is when the car is at the lowest unsecured eligible floor and every unsecured eligible floor has been served at least once via automatically registered car calls (not including COP car calls). The emergency dispatch operation is paused when the car has completed the number of user defined cycles. At that time, the emergency dispatch hold timer starts, and the emergency dispatch operation restarts when the timer elapses. The timer is reset if the car starts to move to park or answer COP car calls. This operation allows the elevator to continue service to the building in the absence of normal hall call registration. When the hall calls are again able to communicate, the elevator will resume normal passenger operation.

Learn Modes Learn modes are special operating modes that allow the elevator to learn landing system and hoistway switch configurations.

Hoistway Learn (Landing System Learn) After the landing system has been installed, the Hoistway Learn (Landing System Learn) operation can be accessed through the UTILS, Landing System Utilities menu. The learn menu will guide you through the required steps, beginning with running the car to the bottom landing on Inspection mode and ending when all terminal and floor level magnets have been learned.

Terminal Switch Learn After the car has been adjusted for high speed running and you are satisfied with performance and accuracy, the Terminal Switch Learn operation can be accessed through the UTILS, Landing System Utilities menu. The terminal switch learn is performed on Test mode with the car running at contract speed. The operation will learn and set NTS2 (if used), ETS, NTS1, and directional limit position, speed, and deltas (allowable ranges).

Any changes made to S-Curve or speed parameters after the Terminal Switch Learn operation has been performed will require that it be repeated.

User Interface

System status display, configuration, and diagnostics are through the on-board, color, touch-screen (OBD - On Board Display). [1]No external programming tools are required. You must be on Inspection mode to change and save parameters. The interface provides:

- Home, page 1-11
- Config 01, 02, and 03, page 1-13
- Utils, page 1-14
- System I/O, page 1-14
- System Diag, page 1-14
- SPA Diag, page 1-15
- SPB Diag, page 1-15
- SPC Diag, page 1-15
- PLD Diag, page 1-15
- Action Info, page 1-15
- Status Info, page 1-16
- Stats, page 1-16
- Scope, page 1-16

Home Screen

Figure 1.2 Home Screen

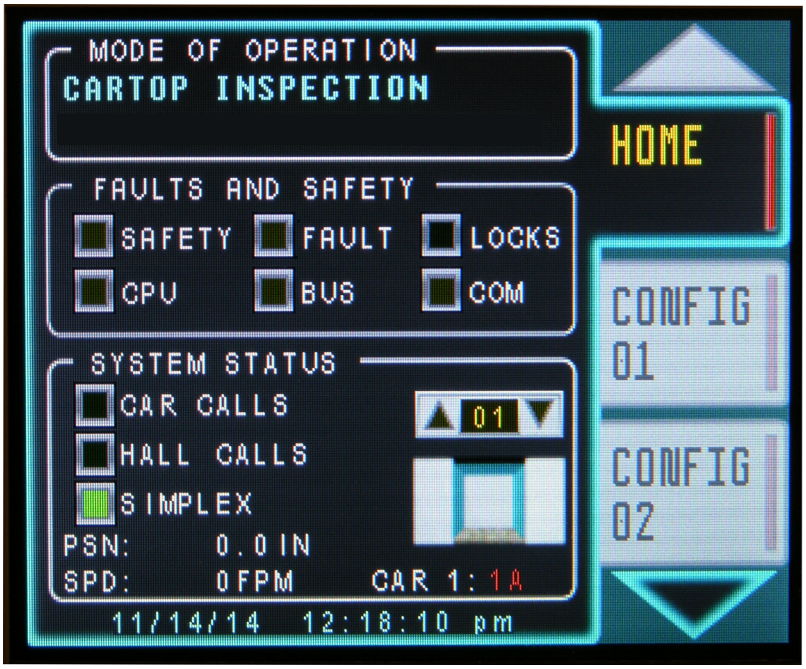

Note

For detailed parameter descriptions, see Screen Descriptions on page 2-5.

1. Web browser access is supported. Parameters may be transferred from controller to controller using a USB drive.

Mode of Operation

This screen section lets you know immediately what mode of operation the elevator is currently using. Typically, this will be Passenger mode but it may be any of several different modes. In our example illustration, the car is on CT (Car Top) INSPECTION operation. Please see Operating Modes on page 1-7.

The second line of the display shows any events or faults that may be active in yellow text. Usually, this line will be blank.

Faults and Safety

These “LED” indicators provide immediate information about factors affecting elevator operation.

- SAFETY:
  - Green = Safety string OK.
  - Red = Safety string open.
- FAULT:
  - Blank = No Faults
  - Yellow = One or more self-resetting faults/events are active.
  - Flash Yellow = One (or more) latching faults (requiring fault reset) are active.
- LOCKS:
  - Green = Door lock string is made up.
  - Blank = Door lock string is open.
- CPU:
  - Green = All CPUs (SPA, SPB, SPC, PLD, LS-EDGE-EL) are online and communicating.
  - Red = One (or more) CPU(s) is/are offline or not communicating.
- BUS:
  - Green = All buses (2LS, 3HN, M2MV ...) hardware status okay.
  - Red = One (or more) bus(es) is/are not detected.
  - Yellow = One (or more) buses is/are not detected due to normal operation (ie, the 2LS bus is temporarily interrupted when the doors are open).
- COM:
  - Green = All CPUs are communicating with all buses (3HN, CAN, COP, ...).
  - Red = One (or more) CPUs not communicating with one or more buses.

System Status

This section tells you how the system is operating right now.

- CAR CALLS:
  - Green = Car is in service for car calls.
  - Blank = Car is not in service for car calls.
- HALL CALLS:
  - Green = Car is in service for hall calls.
  - Blank = Car is not in service for hall calls.

- SIMPLEX/DISP ID: nn
  - Dispatcher - Duplex installation, assigning hall calls for itself and for the second car of the Duplex.
  - Disp ID: nn - indicates that this car is accepting hall call assignments from the other car in a Duplex installation.
  - Simplex: Single self-dispatching car.

Additional information provided in this screen section includes:

Table 1.4 General Status Information

Topic	Description
Intended Direction	Intended direction of travel (preferred direction)
Actual Direction	Actual direction of travel (direction command activated)
Position	Logical position, user defined floor label
Destination	Next destination, user defined floor label
Door Status	Door state display (closed, opening, open, closing, stalled)
Door Lock Status	Door locks/Car safety string
Car Speed	Commanded car speed
Car Label	Label assigned to this car (1A in our example)
Car Motion Animation	Arrows scroll rapidly in high speed operation; slow on Inspection
Date and Time	mm/dd/yy and 00.00.00 am/pm

Menu Overview

See Section 2 for details about parameter settings, Screen Descriptions on page 2-5. With the car on Inspection mode, take some time to go through all the menus to become familiar with parameter settings and their locations.

Table 1.5 Config 01, 02, and 03

Topic	Description
CONFIG 01	
Building Setup, page 2-5	Controller type, floor information, safety code, and recall floors, landing system type.
Job Info and Labels, page 2-5	Job information, car and floor labels
Elevator Features, page 2-6	Capture and recall floors, car behavior, antinuisance
Configure Spare Inputs, page 2-7	Configure spare inputs.
Configure Spare Outputs, page 2-7	Configure spare outputs.
System Timers, page 2-8	Motor delays, door timers, car delay timers
CONFIG 02	
Hoistway Setup, page 2-9	Floor heights, offsets, access distances, counterweight position
NTS2 Switches, page 2-9	Normal Terminal Slowdown 2 switch setup
ETS Switches, page 2-10	ETS, ETSL setup
S-Curve, page 2-11	Speed curve setup
NTS1 Switches, page 2-12	Normal Terminal Slowdown 1 switch setup
System Control Parameters, page 2-13	Dispatcher, speed, overspeed, emergency brake setup.

Table 1.5 Config 01, 02, and 03

Topic	Description
CONFIG 03	
Building Security, page 2-14	Security settings
Emergency Power, page 2-14	Power type, recall and run selections
Recall Switches, page 2-15	Recall switch settings
Network Settings, page 2-15	IP address information

Table 1.6 Utilities

Topic	Description
File Transfer, page 2-15	Allows you to selectively transfer controller parameters: - Backup Current Settings - Restore Backup Settings - Restore Factory Settings - Export Current Settings to USB Drive - Import & Apply Settings from USB Drive - Export Events to USB Drive
Register Calls, page 2-15	Car and hall call registration
Construct and Bypass Faults, page 2-15	Enable Construction/Fault Bypass. Set fault bypass for Inspection and Automatic modes.
Safety Tests, page 2-15	Commissioning tests (Test descriptions, page 1-65)
Date and Time, page 2-15	Set date and time
Landing System Utilities, page 2-15	Hoistway Learn (Landing System Learn); Landing system view; Terminal switch learn.

Table 1.7 System I/O

Topic	Description
System Inputs, page 2-16	View system input status
System Outputs, page 2-16	View system output status
Programmed Inputs, page 2-16	View programmed input status
Programmed Outputs, page 2-16	View programmed output status
Main CPI I/Os	View status of main CPI board I/Os
Aux CPI I/Os	View status of aux CPI board I/Os

Table 1.8 System Diagnostics

Topic	Description
Motion I/O, page 2-16	Drive control, hoistway switches, emergency brake
Event Log, page 2-16	First In/First Out logging of system events
Door Control, page 2-16	View door control signal status
Diagnostics Tree, page 2-16	Safety related signal activity flags
Landing System, page 2-16	View landing system signal status
Active Events, page 2-16	View currently active system events

Table 1.9 SPA Diagnostics

Topic	Description
SPA Flags	Registers and active flags
SPA Numeric	Register data pertaining to general I/O
SPA Motion Numeric	Register data pertaining to car movement
Emerg Pwr & Earthquake	View emergency power and earthquake related flags.
Door Dwell Times	Conditions affecting door dwell time with activity indicators
Itinerary manager	Conditions affecting car travel with activity indicators

Table 1.10 SPB Diagnostics

Topic	Description
SPB Flags	Registers and active flags
SPB Numeric	Register data
SPB Inputs	SPB input flags
SPB Outputs	SPB output flags

Table 1.11 SPC Diagnostics

Topic	Description
SPC Flags	Registers and active flags
SPC Numeric	Register data
SPC Inputs	SPC input flags
SPC Outputs	SPC output flags
Group to Car Data	Group to car data monitoring
Car to Group Data	Car to group data monitoring

Table 1.12 PLD Diagnostics

Topic	Description
PLD Flags	Flags for PLD related system operations.
PLD Numeric	PLD register data
PLD Inputs	Activity on inputs related to the PLD.
PLD Outputs	Activity on outputs related to the PLD.

Table 1.13 Action Information

Topic	Description
Car call cancelled due to	Cancellation conditions with activity indicators
Hall call cancelled due to	Cancellation conditions with activity indicators
Door open due to	Conditions affecting door opening with activity indicators
Door close due to	Conditions affecting door closing with activity indicators
Prohibit run/start due to	Conditions affecting car starting and running

Table 1.14 Status Information

Topic	Description
CPU Bus communications	Conditions affecting microprocessor communication with activity indicator
Hall Bus Inventory	Inventory and test hall call nodes and indicators
Can Bus Viewer	View CAN bus device IDs and related messaging activity.
Version Information	Software version information
Other Car Settings	Second car settings display for duplex operation
Address Diagnostics	Access selected processor register contents via address entry. Technician assisted troubleshooting.

Table 1.15 Statistics

Topic	Description
Maintenance Statistics	Statistics pertinent to system maintenance
Hourly Statistics	Statistics for the last 24 hours of operation, per hour

Table 1.16 Scope

Topic	Description
View Scope	Select and track four system signals in near real time, from:
Select From Landing System	Switches, slowdowns, door zones
Select From System Inputs	Dedicated inputs
Select From Programmed Inputs	Assignable inputs
Select From System Outputs	Dedicated outputs
Select From Programmed Outputs	Assignable outputs

Component Identification

Figure 1.3 System Architecture

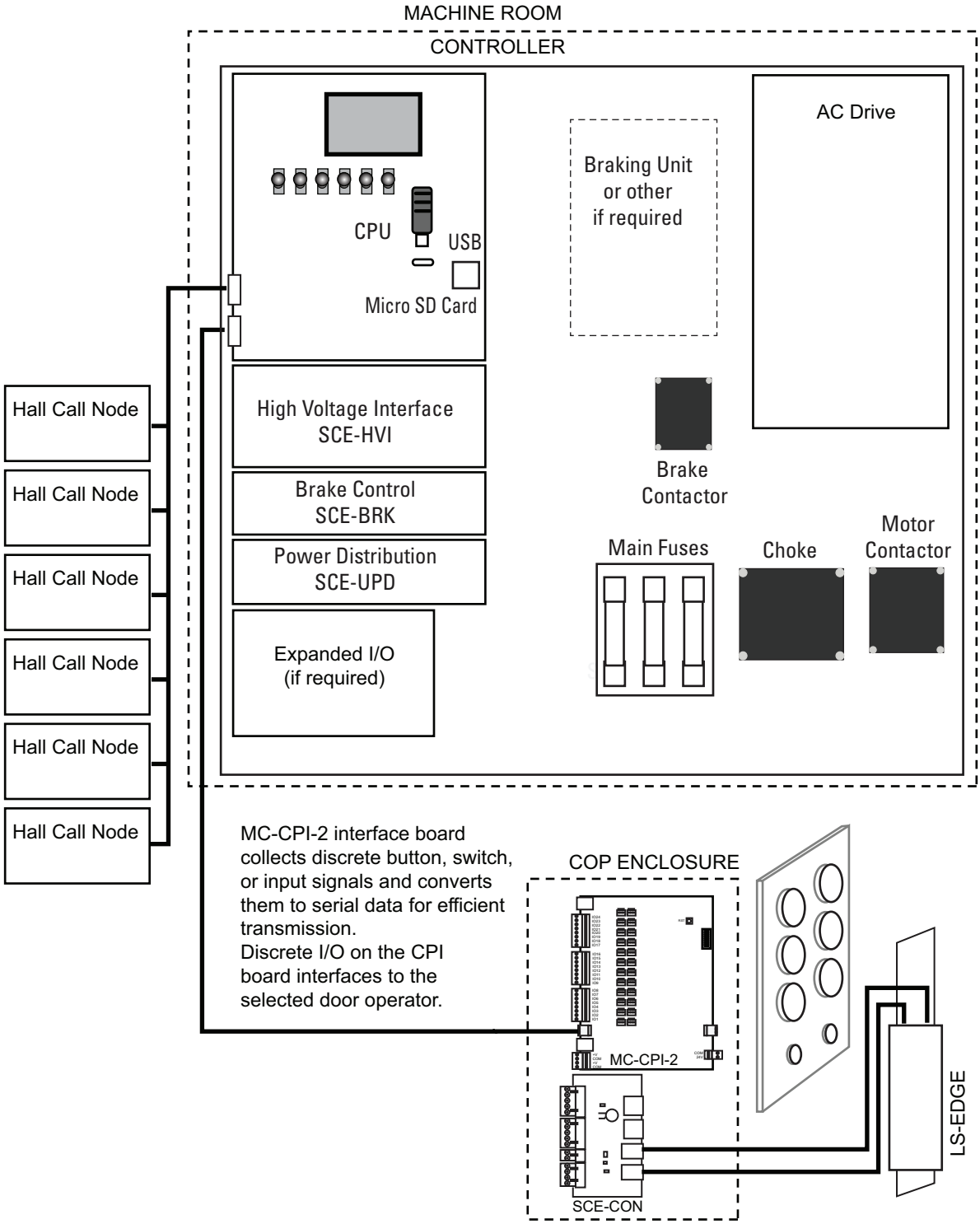

Typical system components:

- Elevator Controller and standard circuit boards (including drive)
- Landing System -
  - LS-EDGE or LS-RAIL (page 1-27)
- SC-3HN serial hall call node boards (one in each hall fixture; one for each additional required riser input)

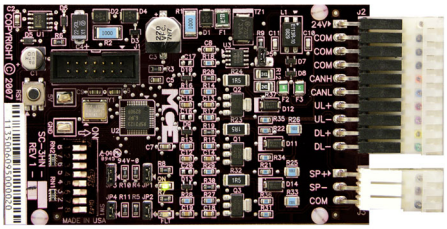

- SC-3HN-2

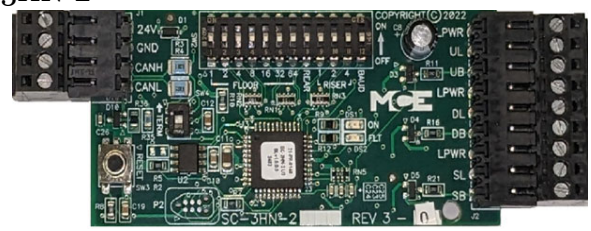

- MC-CPI-2
  - The MC-CPI-2 board serializes COP button and switch information. This board mounts in the car operating panel. The CPI-2 board is also used in the controller cabinet to support additional system I/O.

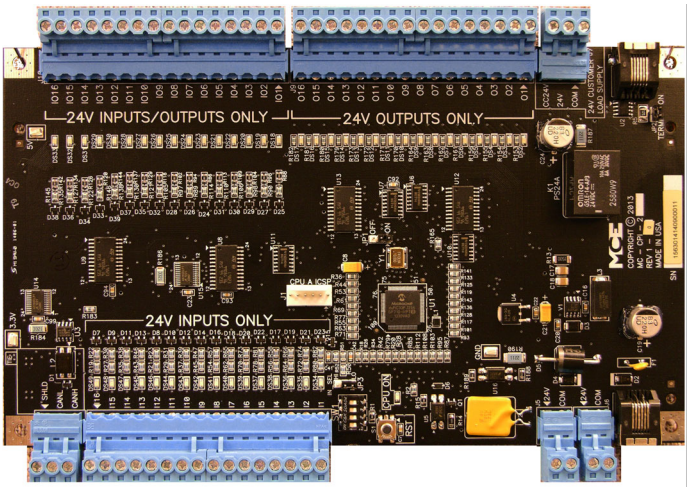

- SCE-CON interface board
  - Provides system CAN to landing system interface. LS-EDGE-EL and LS-RAIL landing systems allow most hoistway switches to exist virtually in software. This vastly reduces hoistway installation and wiring time. This board is usually mounted in the COP with the MC-CPI-2 board but may be mounted in a car top box as well.

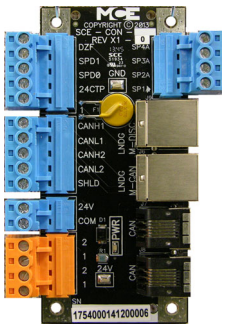

SCE-CPU board switches:

- Test/Pretest:
  - Pretest captures the car by disabling hall calls, serving only car calls, and remaining at the selected recall floor (door operation as set).
  - Test allows the car to be operated at contract speed with doors and hall calls disabled.
  - The switch center position disables Test/Pretest operation.
- Machine Rm Inspection Insp/Normal:
  - Inspection: Places the car on Machine Room Inspection operation.
  - Normal: Places the car on Passenger (automatic) operation.
- Machine Room Enable and Up/Down:
  - To move the car on Inspection operation, the Enable switch must be held in the Enable position and the Up/Down switch must be held in the desired direction. When Enable or the direction switch is released, the car will stop.
- Car Door/Hoistway Door Bypass switches:
  - Used to bypass the car or hoistway door electric contacts (Bypass position). When set to Bypass, the car will run only on Inspection mode.

SCE-CPU Board Reset controls:

- EQ RST: Use to reset the earthquake input and restore normal operation.
- UIM RST: Use to reset the emergency brake following an unintended motion incident.
- FAULT: Use to reset controller faults.
- RSTP: Use to reset the PLD.
- RSTA: Use to reset processor A.
- RSTB: Use to reset processor B.
- RSTC: Use to reset processor C.

Installation

The job prints provide the information required to wire and set up the controller. This section provides information in support of the prints.

Installation Checklist

- Verify incoming power
- Install controller, page 1-20
- Connect NEC250, certified ground, page 1-20
- Connect motor control voltages, page 1-21
- Connect motor encoder
- Install safety string components per job prints
- Verify controller is on Inspection operation
- Connect AC power from mains to controller
- Verify controller settings; verify drive settings, page 1-23, page 1-25
- Set up for construction operation, page 1-22
- Install hoistway switches (may be physical or virtual) and landing system, page 1-27
- Learn hoistway, page 1-55
- Install door operator, page 1-53
- Balance car and counterweight
- Set counterweight height at adjacent-to-car position, page 1-54
- Verify brake will hold 125% of load
- Adjust S-Curve in middle of hoistway (accel/decel/speed/jerk; Test mode), page 1-57
- Learn terminal switches (position/speed), page 1-60
- Install car and hall calls, PIs, page 1-43
- Verify accurate landing at all floors
- Perform commissioning tests, page 1-65

Enclosure Installation

Secure the controller enclosure on a wall or use the optional floor mounting kit as required. Use provided wiring knock-outs to install raceway or conduit to route wires into the cabinet. If you drill or cut the cabinet, do not allow metal chips or shavings to fall into electronics. **Damage caused by this is not covered by warranty.**

Grounding

A professional electrician-certified, NEC 250, earth ground is imperative. Most electrical noise and/or intermittent continuity problems result from poor grounding.

Check for Shorts to Ground

With no power applied to the controller:

1. Note, then unplug the five input-end connectors from the SCE-UPD board. See illustration below.
2. Remove touch-safe fuse covers. Measure resistance from each fuse (either end) on the board to ground.
3. If there are any shorts to ground, troubleshoot related connections to find and correct the short.
4. Replace touch-safe fuse covers.
5. Reconnect the input connectors to the SCE-UPD board.

SCE-UPD Board

AC Power, Motor, Brake

Connect AC power, motor, and brake as shown in the job prints.

Wire Separation

High voltage wiring must be routed in separate conduit from control or digital communications wiring to avoid potential interference. Size the conduit so that removing pre assembled connectors is not required.

Initial Power Check

Always have a helper standing by the AC disconnect to power up the controller and to immediately shut down if necessary.

1. Verify that the Machine Room Inspection switch is in the INSP position.
2. Check the line side of the Main Power Disconnect switch to verify that all three legs are at the correct voltage.
3. Physically verify that all car and hoistway doors are closed and locked and that no one is in a dangerous position should the car move unexpectedly.
4. Power up the control. Be prepared to immediately shut it down if the car attempts to move.

Machine Room Construction Run

Before running on Construction mode, certain equipment must be in place:

- Final limit switches. These switches are wired into the safety string and will immediately drop power to the machine and brake when opened.
- Pit Stop Switch (Safety string should be as complete as possible)
- Fully functional governor and car safeties
- The governor overspeed switch must be wired between SCE-UPD screw terminals GOS1 and GOS2.
- Pit buffers
- Temporary run box (if cartop inspection run is to be used)
- Traction car and counterweight must be roughly balanced per anticipated loading.
- Place both Car Door and Hoistway Door switches in the BYPASS position.

The SAFC input on the SCE-HVI board must see 110VAC before the car can run. If you have a minimal safety string connected as shown in the job prints and as referenced above, this requirement will be met. See figure below.

Before the landing system is installed and the hoistway is learned, the car will be unable to run on construction mode due to faults generated by the lack of this equipment. To bypass faults on construction mode:

- On the SCE-CPU board, move the FLT BYPASS jumper to BYPASS. This bypasses controller response to faults (except Overspeed) during Inspection operation. Inspection mode fault bypass remains active, even across power cycles, until set to NORM.
- Go to the Utilities menu on the touch screen (UTILS), select Construct and Bypass Faults.
- Press Construction/Fault Bypass Disabled button to set it to Enabled.

Construction Run: Cartop

To run on Construction mode using a temporary run box connected to cartop inspection inputs, see the following.

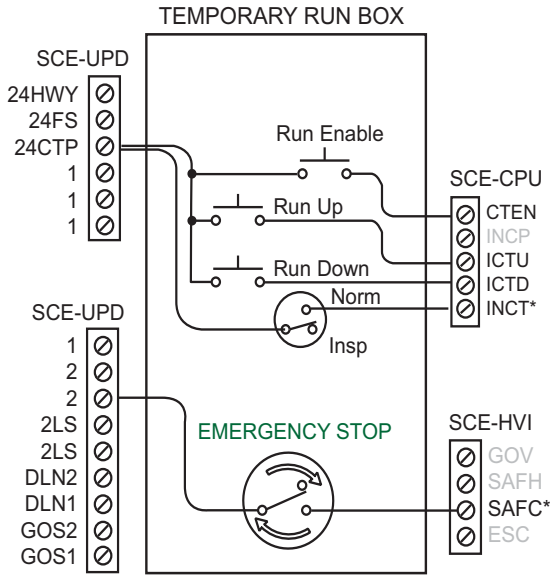

INCT to 24CTP through a switch allows you to enable and disable car top inspection.

Required Drive Settings

In order to operate safely in construction, drive parameters must be verified. Parameters are preset at the factory according to specific job information but must be verified before attempting to move the elevator. If the drive manual provides a procedure for AC induction motor learn, complete that procedure for best drive/motor matching.

Magnetek HPV900 Series 2

Verify/set the drive parameters shown below. For now, remaining drive parameters may be left at default values.

Figure 1.4 Magnetek Setup Overview

U0 Utility Menu

U9 Drive Mode	Cls/Opn Loop

A1 Drive menu

Contract Car Speed	Per job
Contract Motor Speed	Per motor
Brake Pick Time	0.0
Encoder Pulses	Per job

A2 S-Curves menu

Accel Rate 0	7.99 ft/s^2
Decel Rate 0	7.99 ft/s^2
Accel Jerk Out 0	0.00
Decel Jerk In 0	0.00
Decel Jerk Out 0	0.00

A4 Power Convert menu

Input L-L Volts	Per job

A5 Motor Menu

Motor ID	(4 or 6 pole)
Rated Mtr Power	Per motor
Rated Mtr Volts	Per motor
Rated Excit Freq	Per motor
Rated Motor Curr	Per motor
Motor Poles	Per motor
Rated Mtr Speed	Per motor

C1 User Switches menu

Spd Command Src	Serial
Run Command Src	Serial
Spd Reg Type	Elev Spd Reg
Pre-Torque Source	Serial
Fault Reset Src	Serial
Ramped Stop Sel	Ramp On Stop
Ramp Down En Src	Run Logic
Motor Ovrld Sel	Fault At Stop
Serial Mode	Mode 1

C2 Logic Inputs menu

Logic Input 1 (TB1-1)	Drive Enable
Logic Input 3 - 9	No Function

C3 Logic Outputs menu

Logic Output 1 (TB1-13)	Ready To Run
Logic Output 2 (TB1-14)	Run Commanded
Logic Output 3 (TB1-15)	Speed Reg Rls
Logic Output 4 (TB1-16)	Ramp Down En
Relay Coil 1 (TB2-27/28/29)	Ready to Run
Relay Coil 2 (TB2-30/31/32)	Speed Reg Rls

C4 Analog Outputs menu

Analog Output 1 (TB2-1)	Speed Command
Analog Output 2 (TB2-8)	Speed Feedback

Note

A1 drive menu Contract Car Speed must be equal to Element Config 02 > Contract Speed. Once set, **Element Config 02 > Contract Speed should NOT BE CHANGED**.

If it is desired to slow the car for testing, use the Config 02 > High Speed setting.

TORQMAX F5, v3.21

This version of the F5 drive features an LCD and restructured parameters for easier setup. The drive is programmed by MCE before the controller is shipped but you must verify that settings match actual site requirements.

Figure 1.5 TORQMAX Setup Overview

Basic Setup

US02	System Units	Ft/min = 1
US03	Motor Type	Ind Grd=0
US04	Control Type	Serial Serv. 50=5
US06	Contract Speed	Per job
If changes made: US05		Write to Drive = 2

Inputs

LI01	Type of input	0 = PNP
LI15	Direction Sel Inp	0 = Up/Dn inputs

Motor Data

LM01	Motor Power	Per motor
LM02	Motor Speed	Per motor
LM03	Motor Current	Per motor
LM04	Motor Frequency	Per motor
LM05	Motor Voltage	Per motor
LM06	Motor Power Factor	Per motor
If unknown, 0.9 for high slip, 0.75 for Induction		
LM08	EI Motor Protect	On = 1
LM09	EL Motor Protect Current	Motor Rated

Control Setting

LC01	Control Mode	Clsd Loop FOC = 2 or Clsd Loop PTrq = 3

Encoder Data

LE02	Encoder 1	Pulse Number = 1024

Machine Data

LN01	Traction Sheave Diameter	= 24 (Default)
LN02	Gear Reduction Ratio	= 30 (Default)
LN03	Roping Ratio	= 1 (Default)

Tune Parameters

See Motor Learn in TORQMAX Manual

Note

Drive US06 Contract Speed must be equal to Element Config 02 > Contract Speed. Once set, **Element Config 02 > Contract Speed should NOT BE CHANGED**.

If it is desired to slow the car for testing, use the Element Config 02 > High Speed setting.

Note

Timer Parameters:

- LT10 Brake Drop Delay = 0
- LT12 Current Hold Time = 0

Note

We recommend that you carefully read the drive manual shipped with your controller to become familiar with menus and capabilities.

Full Drive Parameters

For full drive parameters and setting recommendations, please refer to the drive setting reference documents shipped with the controller.

Required Controller Settings

To get the car running on construction mode, verify/set the following parameters. Please refer to "Screen Descriptions" on page 2-5.

- CONFIG01 > Building Setup > Controller Type = Traction
- CONFIG02 > System Control Parameters
  - Hoist Motor Speed (RPM)
  - Inspection Speed (FPM)
  - Drive Type

Brake Pick and Hold Voltages (SCE-BRK board R3 and up)

Pick and hold voltages are set using the PICK, HOLD and RELEVEL potentiometers on the SCE-BRK board.

1. Set all three potentiometers on the SCE-BRK board to their fully CCWpoints.
2. Place SCE-BRK jumper JP1 in the PICK_ONLY position. This will allow time to make adjustment before the controller switches to HOLD mode (normally about 1.5 seconds after PICK begins with jumper in PCK & HLD position).
3. Place a voltmeter across the brake leads where they connect to the screw terminals labeled BR+ and BR- on the SCE-BRK board.
4. Use Inspection controls to pick the brake. Adjust PICK voltage using the PICK trim pot. Do this quickly to avoid overheating the brake coil.
5. Release the inspection controls and allow the brake to drop.
6. Place jumper JP1 in the PCK & HLD position.
7. Pick the brake as before. The controller will first apply pick voltage, then shift to hold mode. (LED indicators show which mode you are in.) Adjust the HOLD voltage using the HOLD trim pot.
8. 8.The Relevel Pot may be left fully CCW if the Relevel function is not used on this system. In this case place a shunt on the RLVL_DIS side of JP3.
9. If the Relevel function is to be used then begin by placing a shunt on the RLVL_DIS side of JP3. This disables external control of the Relevel function. To select the manual setup mode, place a shunt on the RLVL_ADJ side of JP2. This causes the RELEVEL pot to be selected. In practice this should be set a little lower than the PICK pot and higher than the HOLD pot. The exact setting can only be arrived at with a running car.
10. Move the shunt on JP2 from RLVL_ADJ to PARK.
11. Move the shunt on JP3 from RLVL_DIS to RLVL_ENA to enable normal Relevel operation mode via the controller.

Note

If brake voltage is too high or too low and cannot be adjusted to the correct value, you can alter the applied AC voltage at SCE-BRK terminals BRL1 and BRL2 by changing the connections to secondary taps (X9 through X16) of transformer T1.

Brake Faults

- Overcurrent: Overcurrent limit specification for the brake board is set at 10 A. If brake coil current exceeds this amount, the BRK FLT LED will light and the driver will be disabled until the brake is dropped again.
- IGBT: If the Q4 IGBT fails shorted, the IGBT FLT LED will light and will not go out until the board is repaired. If the board is powered OFF, then ON the IGBT FLT LED will immediately light again.
- If brake pick/position switch is installed (Config 01 > Spare Inputs > Brake Sw), user may see brake pick switch open/closed/flaky faults if switch malfunctions.

Brake Transformer Information Now that the brake is picking and holding, it is time to do a rough calibration of inspection speed. Using a hand tachometer, adjust drive parameter A1 CONTRACT MTR SPD until the car velocity matches the setting under CONFIG 02/SYSTEM CONTROL PARAMETERS/INSPECTION SPEED. Increasing the drive parameter will result in a faster moving car.

Please refer to the SCE-BRK description in Section 2 of this manual for brake transformer information, page 2-37.

Initial Speed Calibration

Now that the brake is picking and holding, it is time to do a rough calibration of inspection speed.

Magnetek

On Inspection Mode: Using a hand held tachometer, adjust drive parameter A1 CONTRACT MTR SPD until the car velocity matches the setting under CONFIG 02 > SYSTEM CONTROL PARAMETERS > INSPECTION SPEED. Increasing the drive parameter will result in a faster moving car.

TORQMAX

On Inspection Mode: Using a hand held tachometer, adjust Machine Data Parameters > LN02 GEAR REDUCTION RATIO until the car velocity matches the setting under CONFIG 02 > SYSTEM CONTROL PARAMETERS > INSPECTION SPEED. Increasing the drive parameter will result in a faster moving car.

LS-EDGE Landing System

The LS-EDGE kit contains the sensor head assembly, an “L” bracket to mount the sensor assembly to a uni-strut that is in turn attached to the elevator cab (uni-strut to elevator cab not provided), steel tape, top and bottom steel tape hanger assemblies, the required number of door zone magnets, and the CAT-5 electrical cables required to connect the sensor to the interface board.

Depending on applicable code, you may have to route electrical connections through conduit. If so, we recommend minimum 3/4-inch flex so that the modular connectors can slide through without binding. Perforations for cable tie wrap connection are provided on the RJ-45 plug-end of the sensor head.

Figure 1.6 LS-EDGE Component

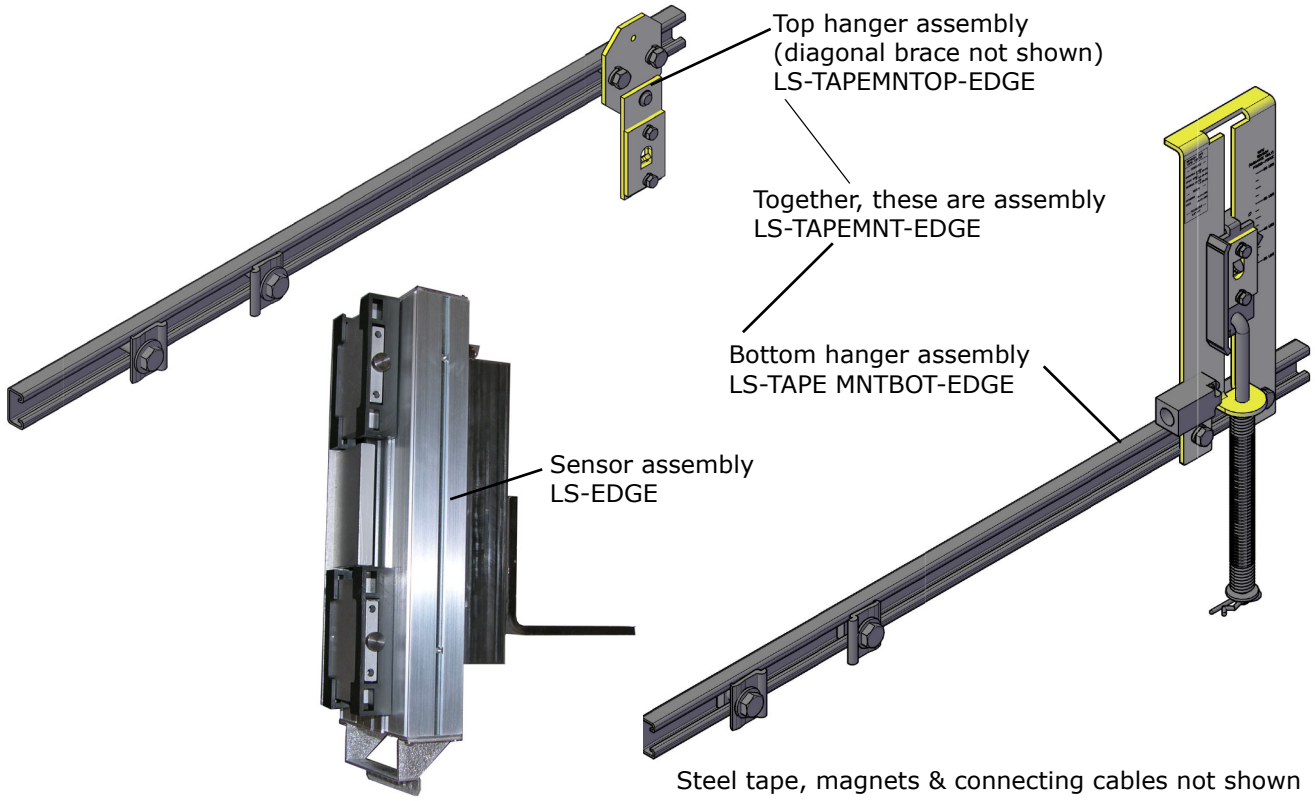

Tape Installation

Before installing perforated tape, ensure adequate clearance from beams, walls, counterweight, cab, and terminal limit devices. Make sure the sensor is not placed so close to the governor lift arm that, when the car safeties are activated, the sensor is damaged or the car safeties cannot apply.

- Hang the tape high enough in the hoistway so that, when the counterweight is on a fully compressed buffer, the sensor assembly will not be damaged by overhead obstructions. Uni-struts are provided to attach the tape to the rails.
- Attach the tape in the pit low enough so that, when the car is on fully compressed buffer, the sensor assembly does not contact the bottom hanger assembly.
- Adjust tape spring tension so the tape does not make noise as the car travels up.
- During installation, the edges of the tape sometimes become gouged. After the tape is installed, use a fine file on the edges of the tape to remove any burrs or gouges. This will lead to much quieter operation of the encoder system as the car travels at contract speed.
- After smoothing the edges, wipe off all excess oil and dirt from the face of the tape before installing magnets. Do not use rags that will leave lint on the tape.

Top and Bottom Hangers

1. Attach the uni-strut for the top tape hanger across the back of the selected guide rail using the forged rail clips and hardware provided.
2. Attach the diagonal brace as shown below. (Used only when tape length exceeds 150 feet.)

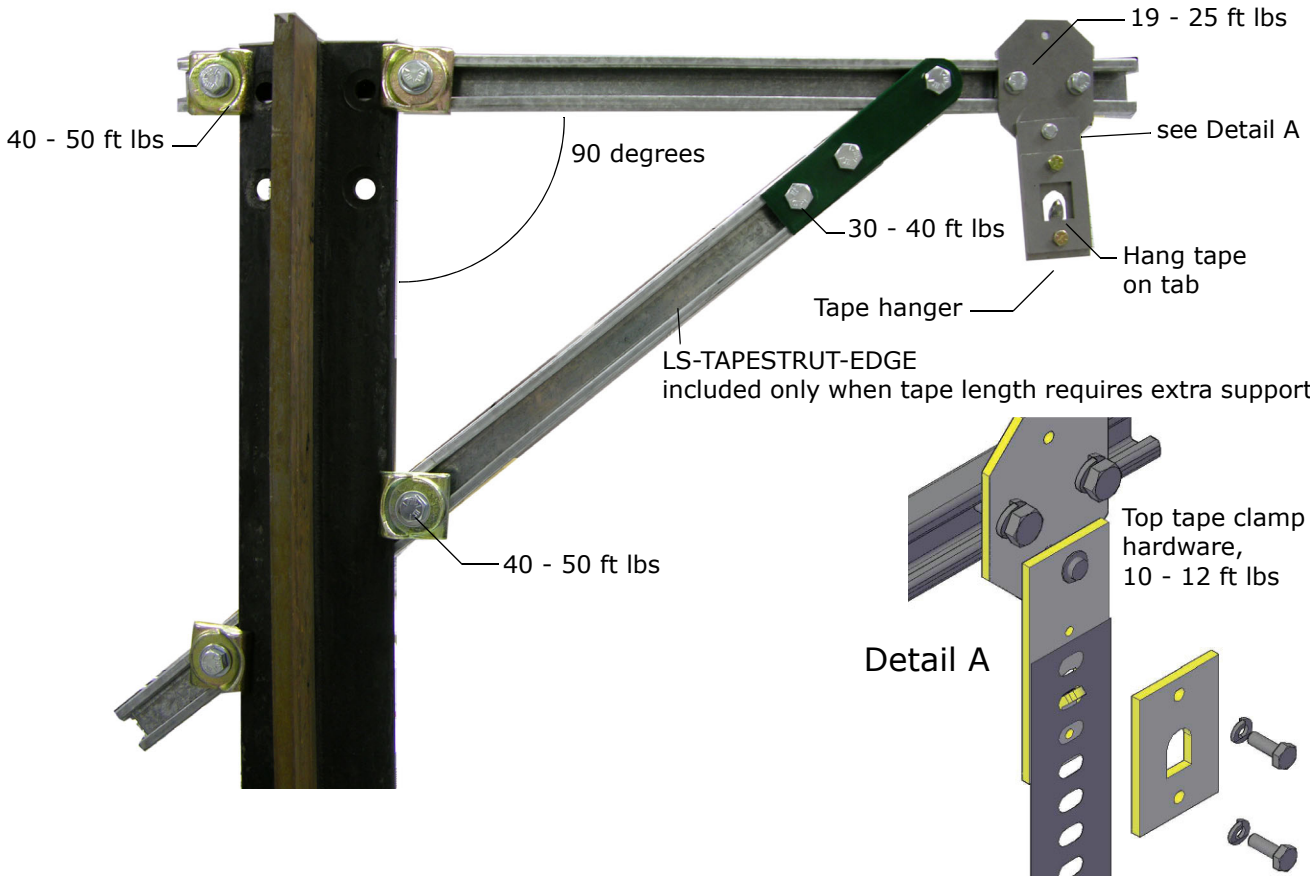

3. Adjust extended strut length as required (tape suspended as close to the guide rail as adequate clearances will allow to reduce loading on end of unistrut). Secure rail mounting hardware (40 - 50 ft lbs.). (The tape hanger slides in the strut for fine adjustment later.)
4. Hook the tape on the protruding tab. Secure the top tape clamp in place (10 - 12 ft lbs.).
5. Record the distance from the rail edge to the tape edge. _____ in/mm.

Bottom Hanger The bottom hanger provides tension to minimize vibration while allowing expansion/contraction across seasonal temperature ranges. Ensure that the tape to rail edge measurement matches that recorded for the top hanger so that the car tracks the tape accurately. Do not use a plumb in case the rail stack is not exactly aligned. The scale values are provided as a guideline only. They are not calibrated. Adjust to suit the installation.

Figure 1.7 Bottom Hanger Attachment

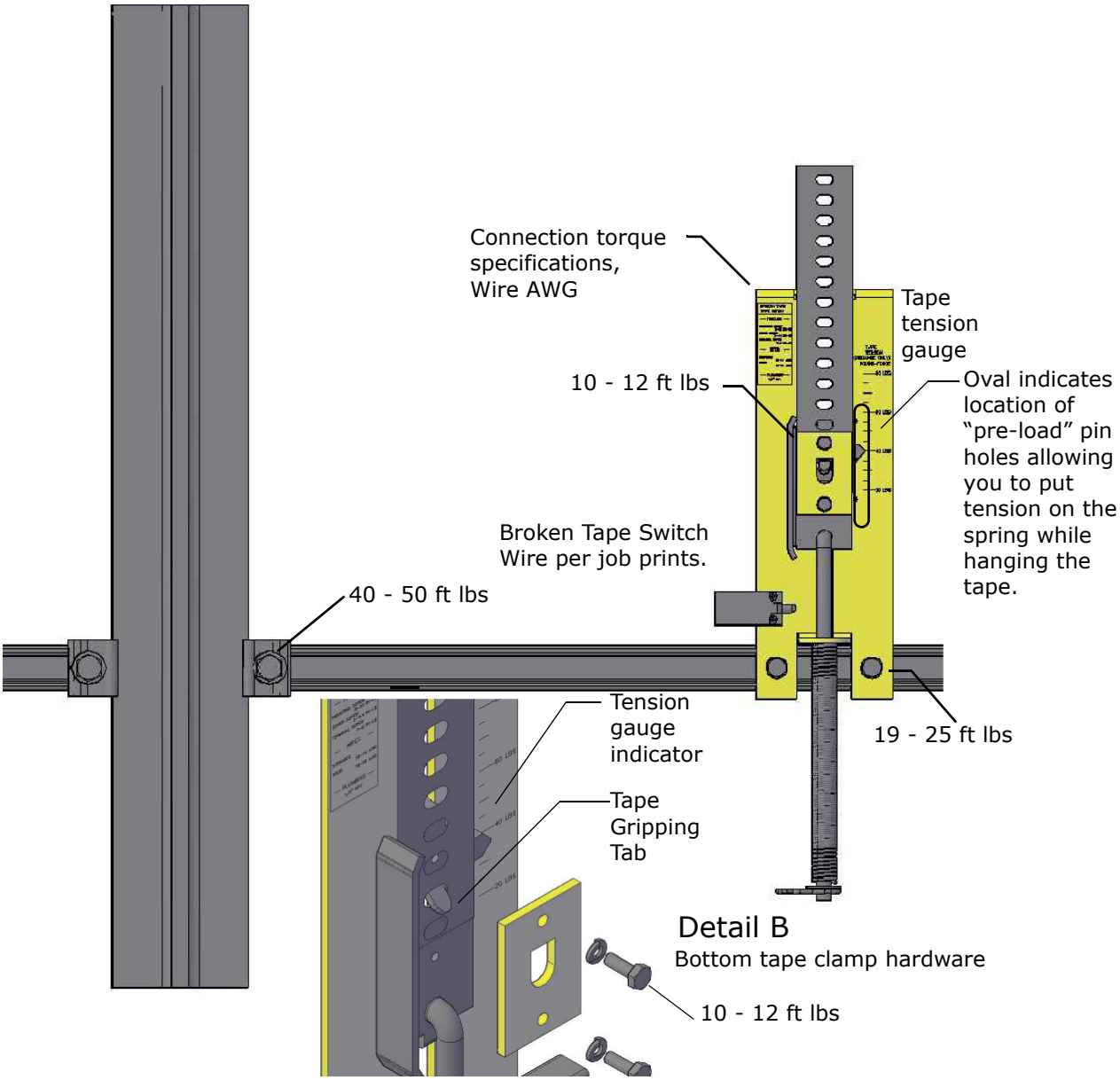

LS-EDGE Broken Tape Switch

The normally closed contacts on the Broken Tape Switch are used to detect a broken tape condition. The switch is mounted backwards for protection during shipment. Remove it and mount it as shown on page 1-29. Position the switch so that the cam on the tensioner activates (opens) the switch when the tensioner is at the bottom of its travel (no tension). Note that switch position should be adjusted so that the switch is activated by the cam but not so close that the switch is held against its mechanical stops. The switch activates at approximately 50% of travel.

Tape Hanging

Work from the cartop to hang the tape from the top hanger and allow it to unroll slowly as you move the car down the hoistway. It is best to allow the tape to hang and straighten for at least 24-hours before attaching it to the bottom hanger.

Tape Tension

The tape is tensioned according to compression of the bottom tape mount spring. The tension gauge provides visual indication of low, medium, and high tension positions. Short runs, up to five floors will generally be acceptable at the low tension position. Runs to 15 floors will generally be acceptable at the medium tension position. Longer runs may require the high tension position but you should start out with the medium setting first.

Tape tension is intended to reduce noise caused by tape vibration at contract speed. Generally, you want to use the lowest tension setting that maintains a quiet tape at contract speed.

Sensor Installation

Tape guide side pieces easily detach so the sensor can be slipped onto the steel tape.

Figure 1.8 Sensor with Guide Sides Removed

Figure 1.9 Sensor Mounting

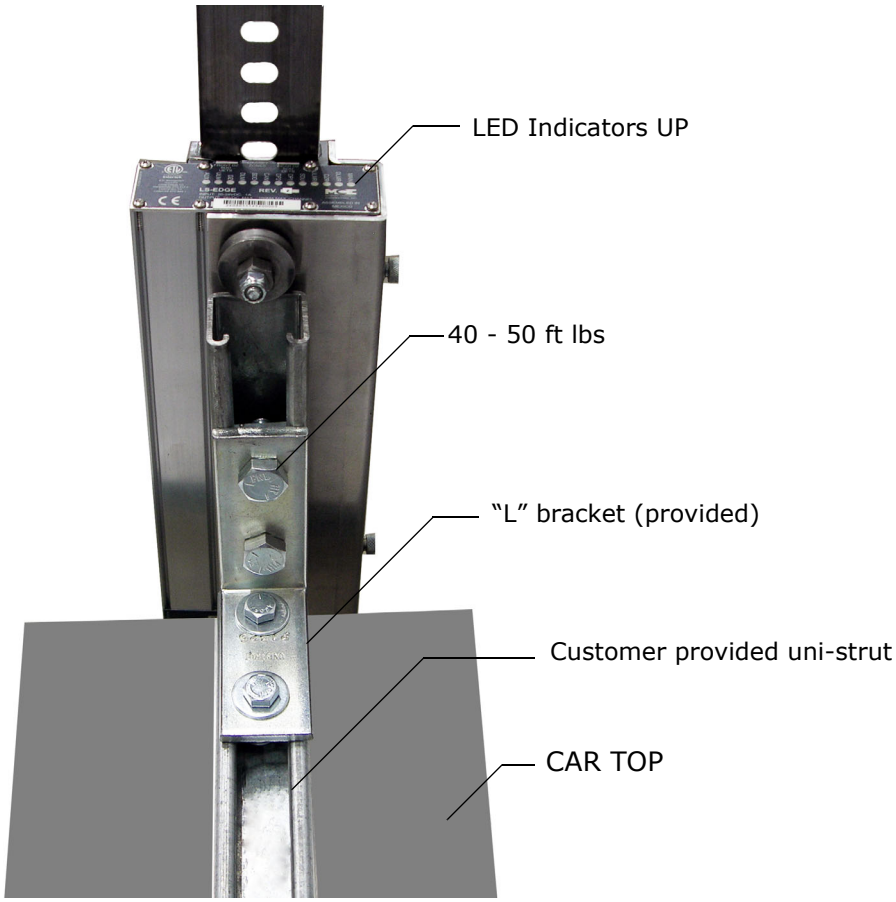

Sensor Alignment

After the tape has been installed, check the sensor alignment. The sensor should not ride hard on either side of the uni-strut bracket during any part of travel through the hoistway. In high-rise buildings, if rail alignment varies substantially, it may cause the encoder guides to wear prematurely. If such misalignment is noted, the installation should be inspected more regularly.

Door Zone Magnets

5.5-inch strip magnets are used at each floor/opening position. Front and rear magnet alignment is shown on the sensor top label. Looking at the perforated tape from the elevator car, the magnets for the front door zone are mounted to the left of the perforated holes; magnets for the rear door zone are mounted to the right of the holes. Special magnets marked with a stripe are used at the top and bottom terminals and for ETS magnets if used.

Figure 1.10 Door Zone Magnet Alignment

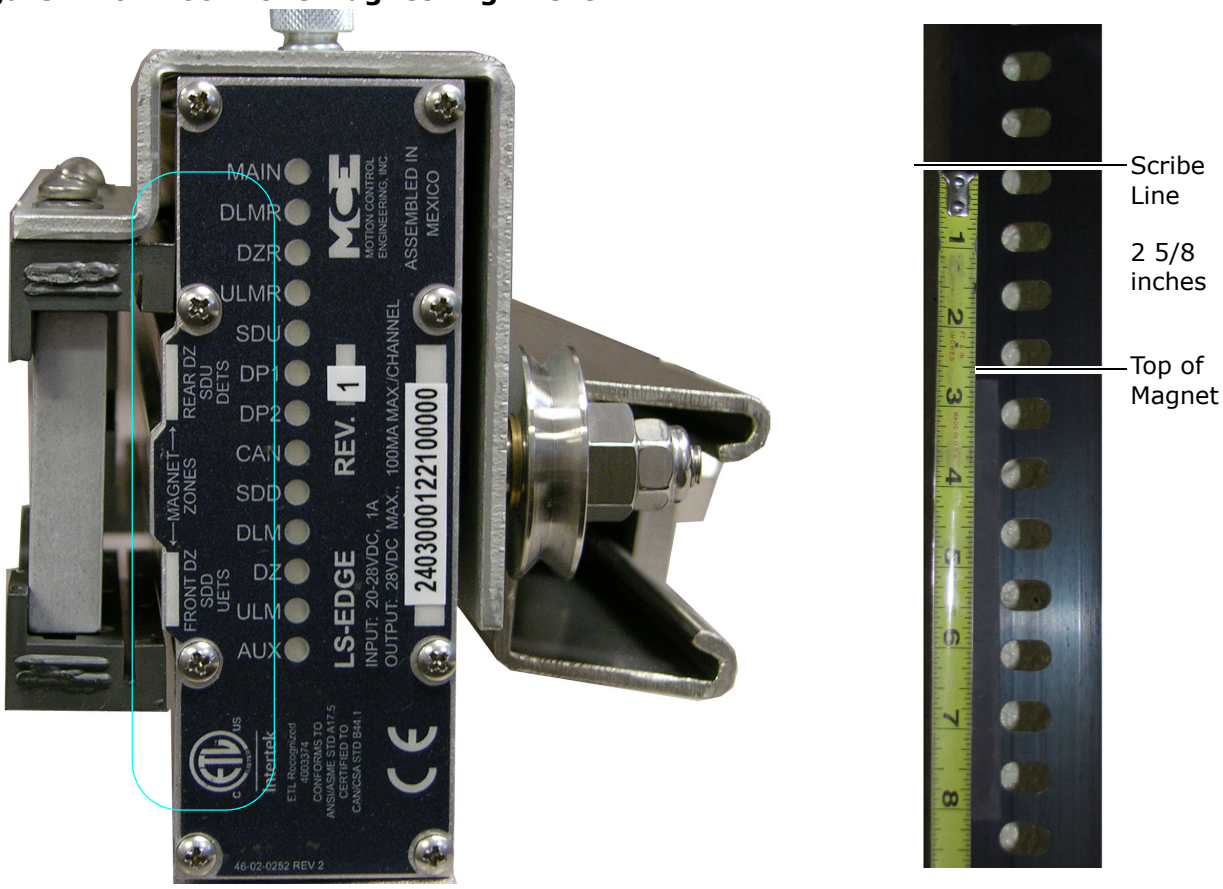

Caution

The magnets must be installed so that they face the front cover of the sensor assembly as indicated by the diagram on the LED indicator label.

To mount the door zone magnets:

1. Move the elevator level to the highest floor on inspection.
2. Make a mark on the tape even with the top of the sensor assembly. Lower the car one foot.
3. Place the top of the door zone magnet 2 5/8 inches below the scribe mark and to the left (front door) or right (rear door) of the perforated holes. For now, simply place the magnets. You can secure them permanently after final adjustments.
4. Continue mounting door zone magnets as described above for successive floors. Maximum single floor height is 40.0 feet.

Top Terminal, Bottom Terminal and ETS Magnets

Top and bottom terminal magnets are marked with a stripe to differentiate them from the door zone magnets. 5-inch striped magnets are also used for physical ETS when required (if reduced stroke buffers are used, cam operated ETSL switches may also be required).

Figure 1.11 Top Terminal, Bottom Terminal and ETS Magnets

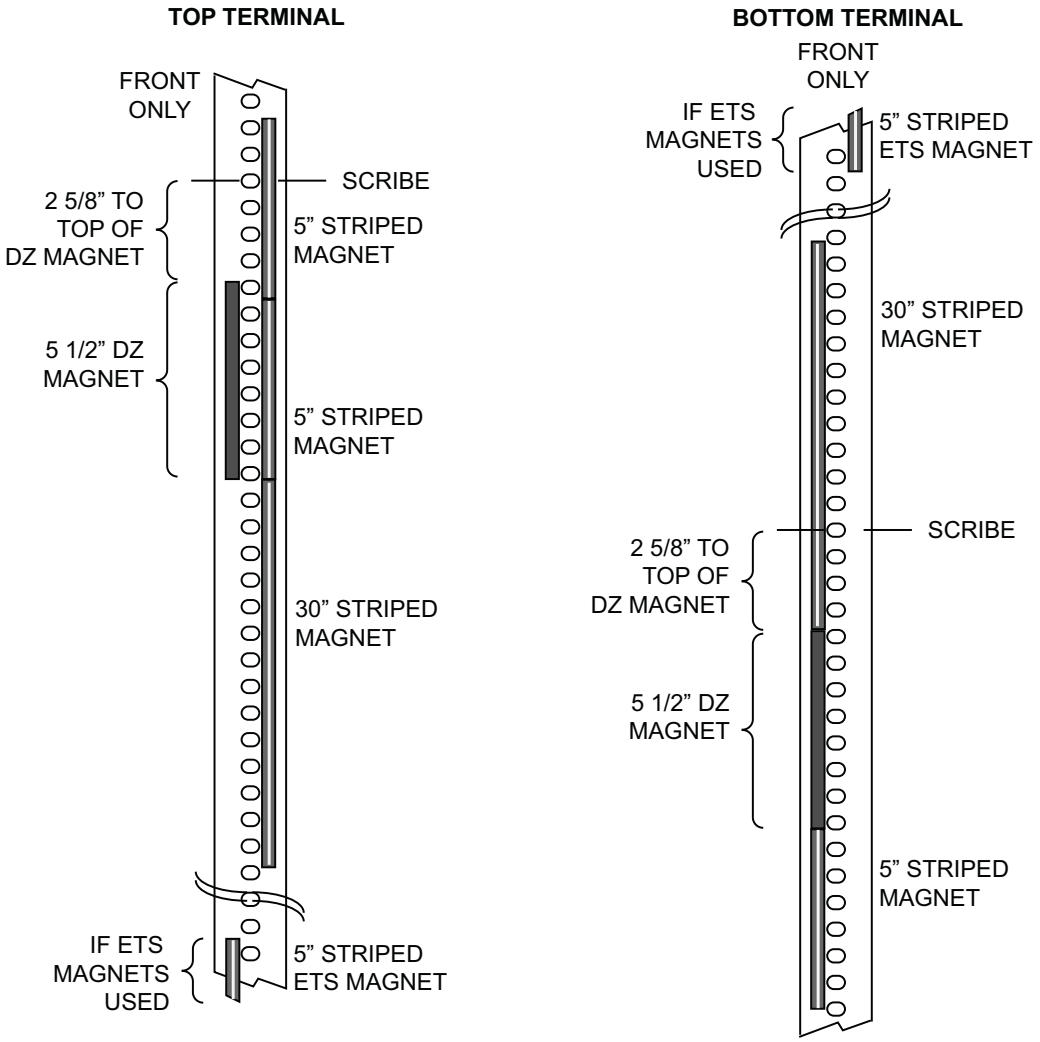

Install the Top Terminal Magnets

Refer to Figure 1.11.

1. Place a 30-inch, striped magnet to the right of the tape perforations, just below the top door zone magnet as shown above. The top of the 30-inch magnet must be even with the bottom of the door zone magnet.
2. Stack two 5-inch striped magnets above the 30-inch magnet. Leave NO GAPS between the striped magnets.

Install the Bottom Terminal Magnets

Refer to Figure 1.11.

1. Place a 30-inch, striped magnet to the left of the tape perforations, just above the bottom door zone magnet as shown above. The bottom of the 30-inch magnet must be even with the top of the door zone magnet.
2. Stack one 5-inch striped magnet directly below the Front Door Zone magnet. Leave no gaps between the ends of the magnets.
3. Once the hoistway has been successfully learned and door zone magnet placement is satisfactory, you may "lock" the magnets in place by placing a drop of silicone adhesive immediately above the top end and immediately below the bottom end of each magnet.

ETS/ETSL magnets and/or switches

Refer to Figure 1.11.

ETS/ETSL switches may be required where reduced-stroke buffers are used or where full-stroke buffers are used and the rated speed is greater than 200 fpm/1.0m/s. These options are described in Terminal Switch Configuration on page 1-59 and the procedure used to determine the location of the switches is described in Terminal Switch Learn on page 1-60.

Note

The floors must be learned, see "Hoistway Learn (Landing System Learn)" on page 1-55 and it is recommended to adjust the drive, see "Drive Response" on page 1-56 before performing the Terminal Switch Learn procedure and installing the ETS/ETSL magnets/switches.

Electrical Connection

Make electrical connections as shown in the job prints. Element installations use the DISC (discrete) and M-CAN connections.

Caution

Secure cables with a nylon tie wrap through the holes provided. VERY IMPORTANT as this provides strain relief and prevents connector fatigue over time.

Figure 1.12 Sensor Connections

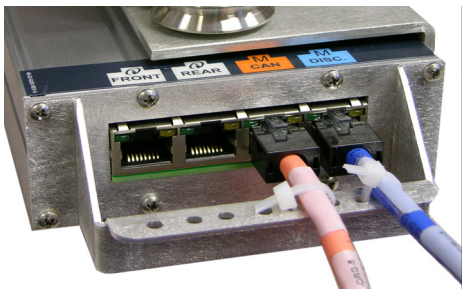

Element CAN & Discrete, 1 orange and 1 blue cable

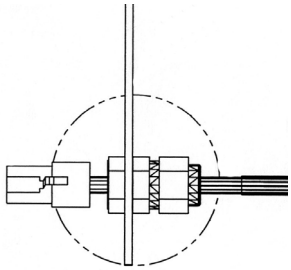

The NEMA 4X / 12 version provides strain relief and sealed entry using a gasketed cover and special hardware as shown.

Parameter Settings

Verify touch screen Config 01, Building Setup information is correct.

Hoistway Learn

Please refer to “Hoistway Learn (Landing System Learn)” on page 1-55.

Offset

All compatible controllers allow the door zone heights to be individually adjusted in 0.10 inch increments to compensate for magnet placement irregularity. Please refer to CONFIG02, Hoistway Setup.

LS-EDGE Indicators

Lighted indicator LEDs on top of the sensor unit provide information about active signals.

Figure 1.13 Indicator LEDs

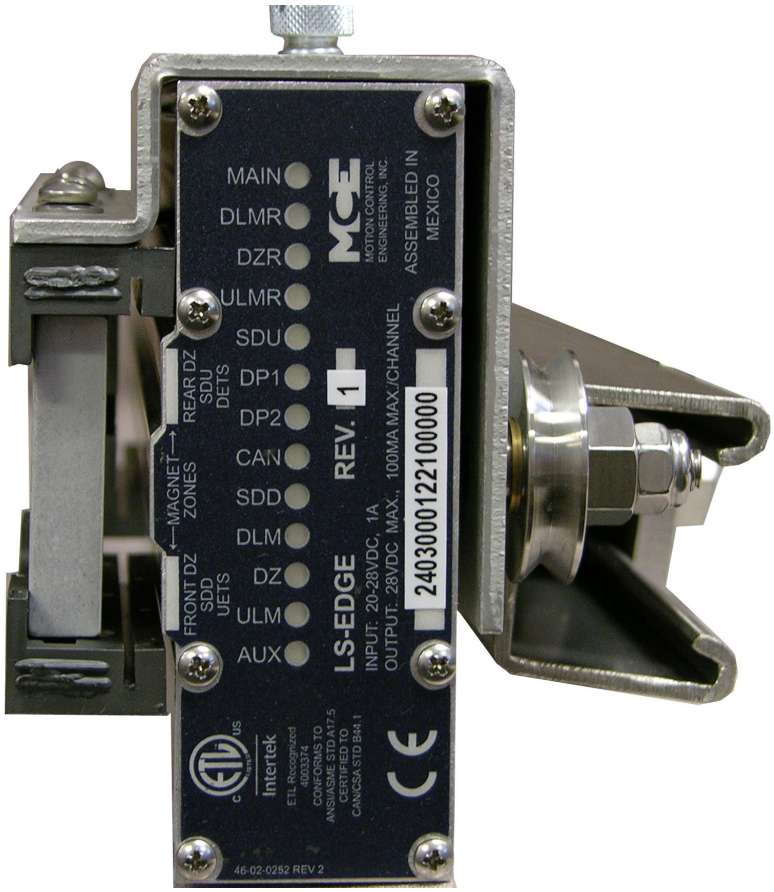

MAIN: LED blinks- processor A active.

DLMR: Down Level Marker Rear.

DZR: Door Zone Rear.

ULMR: Up Level Marker Rear.

SDU: Slow Down Up.

DP1:Quadrature pulse.

DP2: Quadrature pulse.

CAN: CAN communication activity.

SDD: Slow Down Down.

DLM: Down Level Marker (Front).

DZ: Door Zone (Front).

ULM: Up Level Marker (Front).

AUX: Sensor processor B active.

- DP1, DP2: Quadrature pulses. DP1 leads when the car is traveling up. DP2 leads when the car is traveling down. Alternately active whenever the car is in motion.
- CAN: CAN communication with landing system is active.

LS-RAIL Landing System

LS-RAIL is a cartop pedestal mounted positioning system. The encoding wheel rides the face of the rail center blade, tracking position, while two sensor arrays detect floor zone and terminal magnets mounted in the rail angles. MCE can provide a prefabricated cartop mounting pedestal, LS-PEDESTAL, or the installer may build their own.

The system uses capacitor-stored power and non-volatile memory to retain position information in the event of a power failure.

The LS-RAIL kit contains the positioning assembly, the required number of door zone magnets, terminal magnets, and the CAT-5 cables required to connect the sensor to the car top interface box. If ETS magnets are required, they are also included. Depending on applicable code, you may have to route electrical connections through conduit. If so, we recommend minimum 3/4-inch flex so that the modular connectors can slide through without binding.

Figure 1.14 LS-RAIL Positioning Assembly

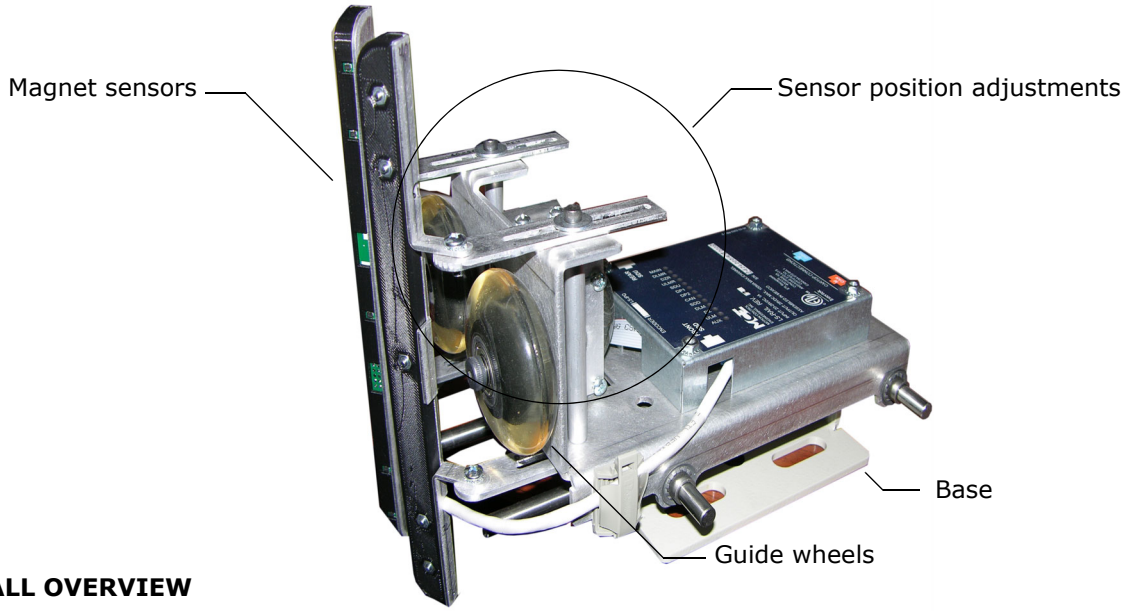

ISTALL OVERVIEW

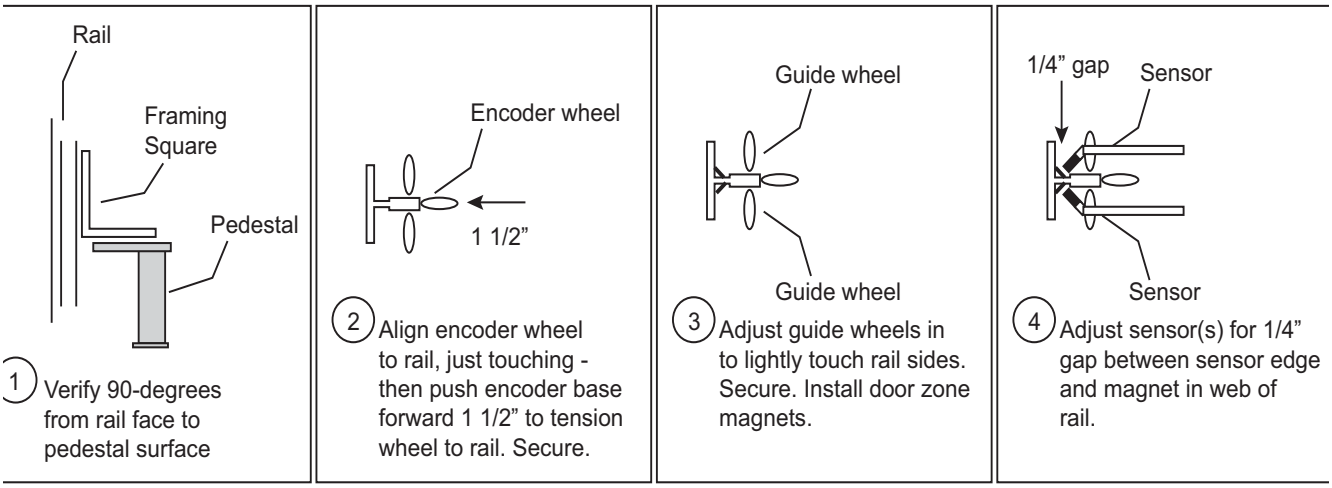

Mounting Pedestal

The pedestal must be rigid and may not flex or vibrate while the car is moving. A manufactured pedestal, LS-PEDESTAL, is available from MCE.

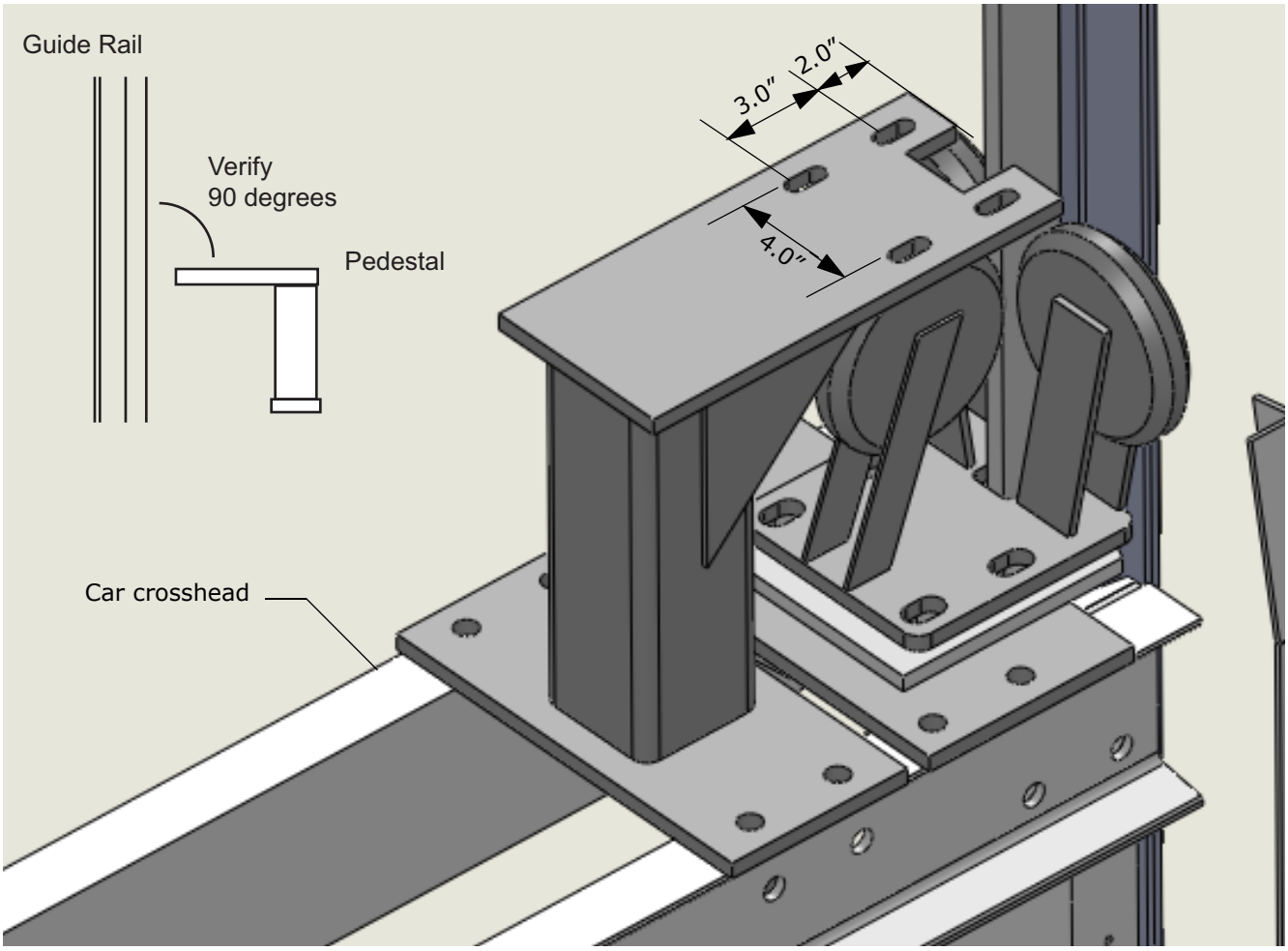

1. Attach the mounting pedestal securely to the elevator crosshead beam.
2. Place the LS-RAIL on the mounting pedestal and slide it into position so that the position encoder wheel is touching the front face of the rail. If necessary, loosen the screws that adjust the position of the leveling sensor bracket(s) and move the brackets away from the rail.
3. Use mounting bolts, washers, and nuts to secure the assembly in place but loosely enough to slide. **Move the LS-RAIL base forward about one and 1/2 inches** to provide adequate encoder wheel-to-rail pressure, then secure the hardware.
4. Bring the guide wheels in until they just touch the sides of the rail. They should not pinch the rail between them because this can prevent the encoder wheel from moving backwards and forwards to maintain rail contact if rail irregularities are encountered.

CAUTION! Sensors can be damaged by collision with rail hardware. Move the car cautiously until adequate clearance is verified. **Damage due to mechanical contact is NOT covered by the warranty!**

Electrical Connections

Make electrical connections as shown in the job prints. Element installations use the DISC (discrete) and M-CAN connections.

Diagnostic LEDs

MAIN: Sensor processor active

DLMR: Down Level Marker Rear

DZR: Door Zone Rear

ULMR: Up Level Marker Rear

SDU: Slow Down Up

DP1: Quadrature pulse

DP2: Quadrature pulse

CAN: CAN communication active

SDD: Slow Down Down

DLM: Down Level Marker (Front)

DZ: Door Zone (Front)

ULM: Up Level Marker (Front)

AUX: Sensor processor active

Hoistway Limits and Slowdowns

The following table lists the required equipment for the LS-RAIL. “Count” indicates information derived from the LS-RAIL.

Table 2. Hoistway Equipment Per Controller

Controller	Terminal Slowdowns	Directional Limits	Finals	Intermediate Stepping	Access Limits	ETS (<200FPM)
Element Traction	Count	Count	Physical	Not Supported	Count	Count & Magnet (SPD 0/1)

Virtual Switches

Generally, when the LS-RAIL landing system is chosen, it is so that many switches may be positioned in software and not physically mounted in the hoistway. The same is true when the LS-EDGE steel tape landing system is chosen.

Door Zone Magnets

5.5-inch magnets are used at each door zone. The magnets for the front door zone are mounted in the left angle of the rail blade; magnets for the rear door zone are mounted in the right angle.

Figure 1.15 Door Zone Magnet Alignment

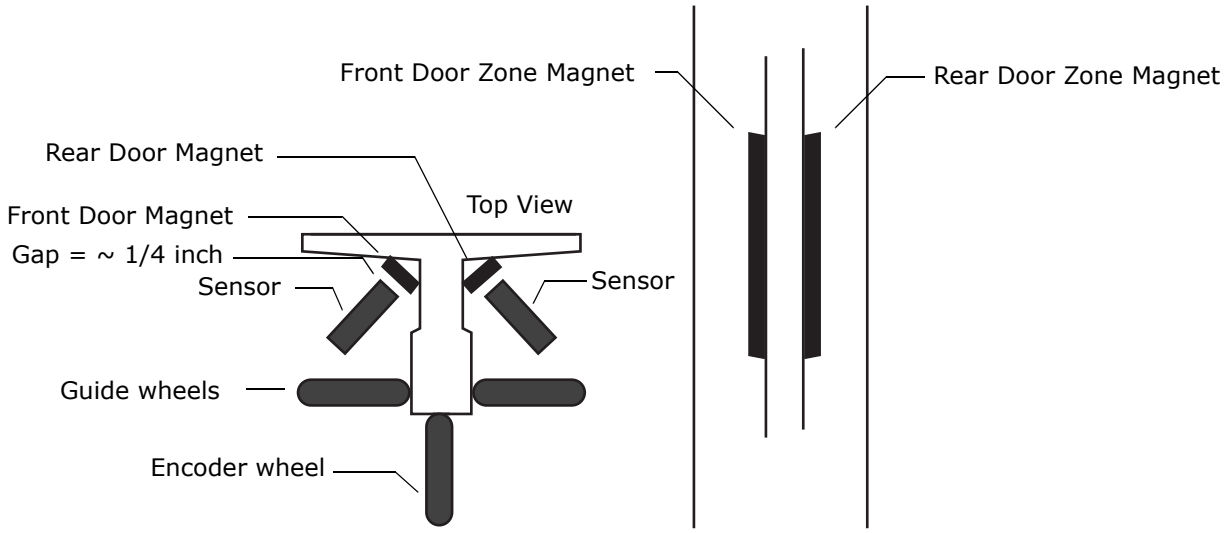

To mount the door zone magnets:

1. Move the elevator level to the highest floor on cartop inspection.
2. Make a mark on the rail even with the top of the sensor blades. Lower the car one foot.
3. Place the top of the door zone magnet 2 inches below the mark in the angle of the rail. For now, simply place the magnets. You can secure them permanently after final adjustments.
4. Adjust the sensors so that the sensor face is parallel to and centered on the magnet surface with a gap of about 1/4 inch. As you move to the next floor, WATCH for any rail hardware that might contact and damage the sensors. You may have to adjust the sensor(s) out to avoid impinging hardware. (Basically, you are adjusting for worst case.)
5. Continue mounting door zone magnets as described above for successive floors.
6. After placing the bottom floor zone magnet, run on inspection back to the top floor, checking that the sensor-to-magnet gap is about 1/4 inch at each floor. If necessary, you can stack magnets to maintain the 1/4 inch gap between the face of the sensor(s) and the magnet surface.
7. As you travel, ensure that the encoder wheel never loses contact with the rail and rolls smoothly and consistently.
8. When you are back at the top floor, you are ready to place top terminal magnets.

Terminal Magnets

Element controllers use terminal magnets. Follow the instructions below.

Top and Bottom Terminal

Magnets marked with a stripe to differentiate them from the door zone magnets are used at the top and bottom terminals. 5-inch striped magnets are also used for physical ETS when required (if reduced stroke buffers are used, cam operated ETSL switches may also be required).

Figure 1.16 Top Terminal and Bottom Terminal Magnets

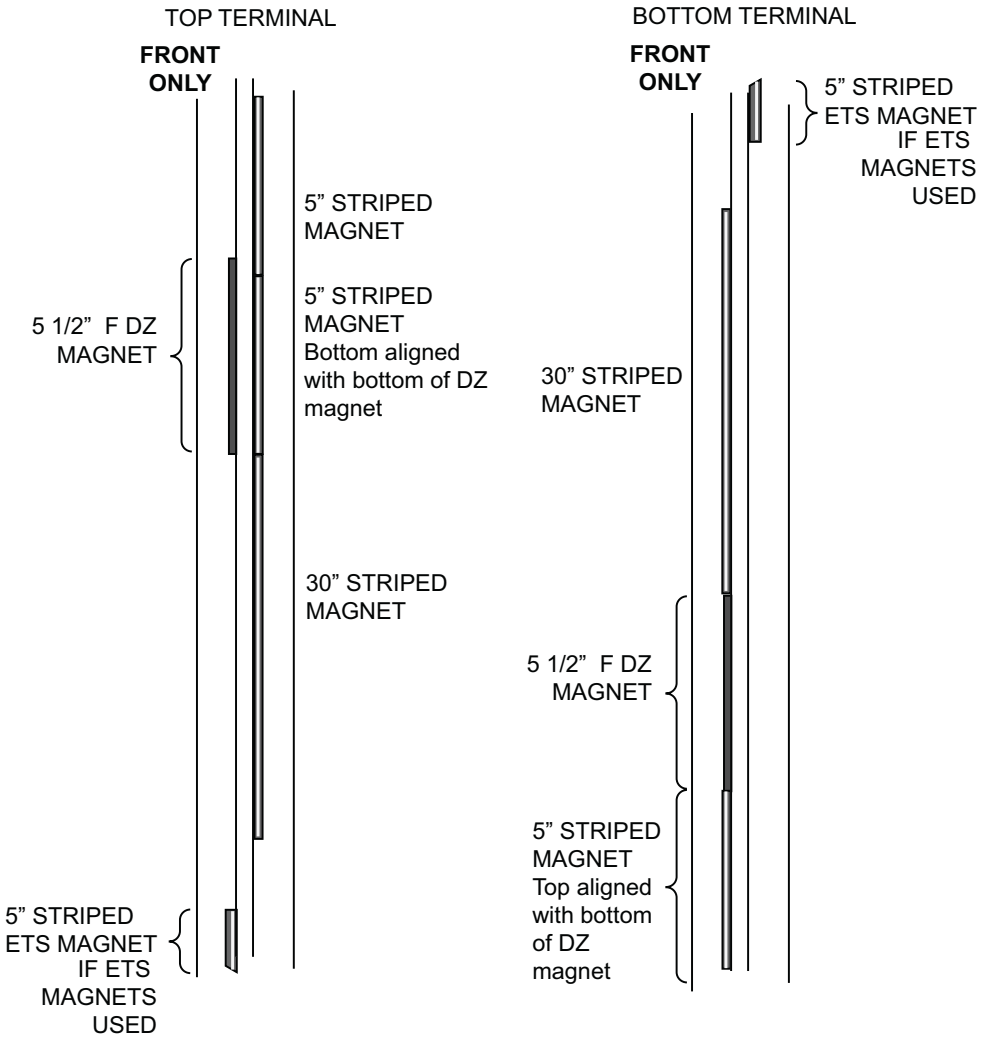

Install the Top Terminal Magnets

Refer to Figure 1.16

1. Place a 30-inch, striped magnet in the right rail angle, just below the top door zone magnet as shown above. The top of the 30-inch magnet must be even with the bottom of the door zone magnet.
2. For jobs with front doors only stack two 5-inch striped magnets above the 30-inch magnet. Leave NO GAPS between the striped magnets.

Install the Bottom Terminal Magnets

Refer to Figure 1.16

1. Place a 30-inch, striped magnet in the left rail angle, just above the bottom door zone magnet as shown above. The bottom of the 30-inch magnet must be even with the top of the door zone magnet.
2. For jobs with rear doors only, stack two 5-inch striped magnets below the 30-inch magnet. Leave NO GAPS between the striped magnets.
3. For jobs with front or front and rear doors, stack one 5-inch striped magnet directly below the Front Door Zone magnet. Leave no gaps between the ends of the magnets.

ETS/ETSL magnets and/or switches

Refer to Figure 1.16

ETS/ETSL switches may be required where reduced-stroke buffers are used or where full-stroke buffers are used and the rated speed is greater than 200 fpm/1.0m/s. These options are described in Terminal Switch Configuration on page 1-59 and the procedure used to determine the location of the switches is described in Terminal Switch Learn on page 1-60.

Note

The floors must be learned, see “Hoistway Learn (Landing System Learn)” on page 1-55 and it is recommended to adjust the drive, see “Drive Response” on page 1-56 before performing the Terminal Switch Learn procedure and installing the ETS/ETSL magnets/switches.

Parameter Settings

Verify the following parameters settings:

- Config 01, Building Setup information is correct.
- Config 02, Hoistway Setup menu is correct per factory settings.

Hoistway Learn

Please refer to “Hoistway Learn (Landing System Learn)” on page 1-55.

Offset

All compatible controllers allow the door zone heights to be individually adjusted in 0.10 inch increments to compensate for magnet placement irregularity. Please refer to CONFIG02, Hoistway Setup.

Landing System Troubleshooting Tools

Touch screen tools will help you isolate any problems with the landing system;

- UTILS > LANDING SYSTEM UTIITIES > LANDING SYSTEM VIEW

Door Zone Verification

Following the hoistway learn process, starting at the top floor, move the car down on inspection and verify that the door zone indicators (e.g., LEDs, relays, diagnostic status, etc.) activate only at the appropriate locations at the landings (i.e., +/- 75 mm or 3”) and nowhere else. Be sure to check rear door zones as well, where applicable.

Indicators

Lighted indicator LEDs on top of the sensor unit provide information about active signals.

Figure 2. Indicator LEDs

MAIN: Sensor processor A active.

DLMR: Down Level Marker Rear.

DZR: Door Zone Rear.

ULMR: Up Level Marker Rear.

SDU: Slow Down Up.

DP1:Quadrature pulse.

DP2: Quadrature pulse.

CAN: CAN communication activity.

SDD: Slow Down Down.

DLM: Down Level Marker (Front).

DZ: Door Zone (Front).

ULM: Up Level Marker (Front).

AUX: Sensor processor B active.

- DP1, DP2: Quadrature pulses (iControl). DP1 leads when the car is traveling up. DP2 leads when the car is traveling down. Alternately active whenever the car is in motion.
- CAN: Motion 2000/4000 or Element CAN communication with landing system is active.

Permanently Attach Magnets

Once the hoistway has been successfully learned and door zone magnet placement is satisfactory, you may “lock” the magnets in place by placing a drop of silicone adhesive immediately above the top end and immediately below the bottom end of each magnet.

Serial Hall and Car Call Boards

Caution

PC boards can be damaged by Electrostatic Discharge (ESD). Use a properly grounded wrist strap when touching PC boards. Do not touch PC Boards unless you are properly grounded.

Hall Calls

Element controllers use serial hall calls. A four-wire drop from the controller provides a connection point for SC-3HN boards that in turn provide analog inputs and outputs for the hall call buttons and LEDs. Refer to the drawings package for connection instructions to your fixtures.

Figure 1.1 SC-3HN Three Input Serial Hall Call Node Board

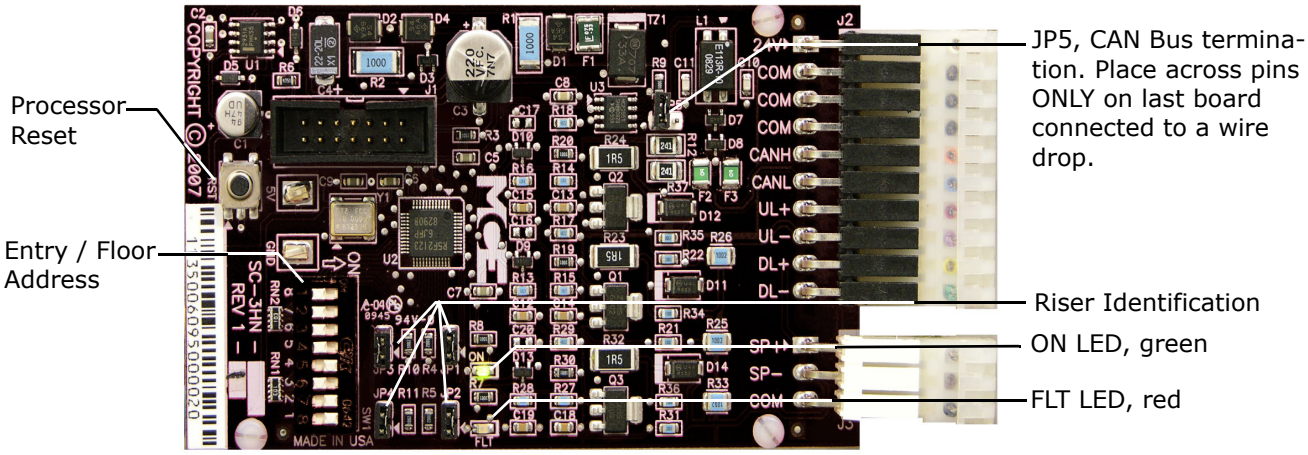

General Installation

All SC-3HN connections are at one end of the board. One board is installed in each hall call panel electrical box. Refer to the job prints.

1. Make connections to the hall call buttons and indicators. (See job prints.)
2. Make connections to the signal/power drop.
3. Verify floor number and door (F/R) location, Floor Number and Front or Rear Opening on page 1-47.
4. Verify riser assignment, Riser Assignment on page 1-47.
5. Last board on wire drop only: Place a jumper on JP5. All other boards: Ensure jumper NOT placed across JP5 pins, Riser Assignment on page 1-47.
6. Insert board in anti-static sleeves and tape closed using supplied ESD sticker.
7. Tuck bag/board into electrical box and re-install hall call.

Addressing and CAN Bus Termination Set SC-3HN addresses as shown in the job prints for the installation. Generic examples are provided below.

Riser Assignment Element supports only one hall riser.

Table 1.1 Riser Assignment by Jumper Binary Representation

JP3	JP2	JP1	Riser
1	1	1	Main A (Binary value 7) USE FOR ELEMENT.
1	1	0	Main B (Binary value 6)
1	0	1	Main C (Binary value 5)
1	0	0	Main D (Binary value 4)
0	1	1	Auxiliary A (Binary value 3)
0	1	0	Auxiliary B (Binary value 2)
0	0	1	Auxiliary C (Binary value 1)
0	0	0	Auxiliary D (Binary value 0)

Floor Number and Front or Rear Opening DIP switch SW1, switches 1 through 7 set the floor address for the board, beginning with Floor 1. Switch 8 selects Front or Rear opening (ELEMENT uses FRONT OPENINGS ONLY).

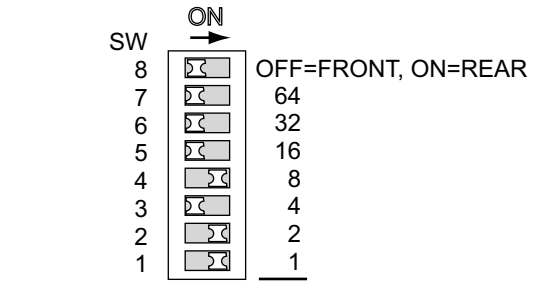

Floor address example = 11

ON switch adds its value to floor address.

When setting addresses, use the values silk-screened on the circuit board, not those shown on the DIP switch.

Baud Rate Jumper JP4 is reserved for future use to select a different CAN Bus baud rate should it become necessary. For now, the only option is to leave the JP4 jumper in place, setting baud rate to 125 kbps.

CAN Bus Termination The CAN Bus must be terminated ONLY ON THE LAST SC-3HN connected to the wire drop (farthest board from Dispatcher).

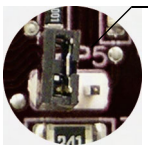

JP5 OFF/Unterminated
All but last board

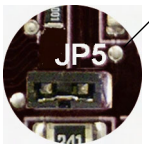

JP5 ON/Terminated
Last board on wire drop ONLY.

On Board Diagnostics Two LEDs provide diagnostic information: The ON LED (green) and the FLT LED (red).

ON LED The ON LED reflects power/communications status.

- ON: Communications OK
- OFF: Board is not receiving power or has no software loaded.
- Blinking: Communications error - more than ten seconds have passed without a message from the group dispatcher.

(FLT) FAULT LED The FLT LED reflects the status of the analog outputs.

- ON steady: Internal fault -
  - Replace board if problem persists
- OFF: No Errors detected.
- Blinking: Output overload or disconnection. Pressing the Reset button on the SC-3HN board will clear a blinking Fault LED.
  - Board inventory not yet run. See Hall Bus Inventory on page 2-17.
  - Overload: Excessive current draw. Resets when current draw is corrected and call button is pressed again.
  - Not Connected: The output is on (button pressed) but nothing is connected to the UL- or DL- output. Resets when the lamp is connected and the call button is pressed again.
- Output Shorted: If short is very quick, the LED will flash. Pressing the call button for a few moments will cause the board to reboot. Resets when the short is removed and the call button is pressed again.

Inventory When all halls calls are installed and functioning properly, the system allows you to save them into memory (inventory them). In the future, when looking for a burned out LED or a stuck switch, the same UI screen will automatically test all inventoried hall calls for you. See Hall Bus Inventory on page 2-17.

SC-3HN-2 Hall Calls

Element controllers use serial hall calls. A four-wire drop from the controller provides a connection point for SC-3HN-2 boards that in turn provide analog inputs and outputs for the hall call buttons and LEDs. Refer to the drawings package for connection instructions to your fixtures.

Figure 1.2 SC-3HN-2 Three Input Serial Hall Call Node Board, Gen. 2

General Installation

The fixture SC-3HN-2 connections are at one end of the board. The power and communication connections are on the other end. One board is installed in each hall call panel electrical box. Refer to the job prints.

1. Make connections to the hall call buttons and indicators. (See job prints.)
2. Make connections to the signal/power drop.
3. Verify floor number and door (F/R) location, Floor Number and Front or Rear Opening on page 1-47.
4. Verify riser assignment, Riser Assignment on page 1-47.
5. Last board on wire drop only: Place Term switch up in the direction of the arrow. All other boards: Ensure Term switch is down, Riser Assignment on page 1-47.
6. Insert board in anti-static sleeves and tape closed using supplied ESD sticker.
7. Tuck bag/board into electrical box and re-install hall call.

Addressing and CAN Bus Termination Set SC-3HN-2 addresses as shown in the job prints for the installation. Generic examples are provided below.

Riser Assignment Element supports only one hall riser.

Table 1.2 Riser Assignment by Switch Binary Representation

Riser 1	Riser 2	Riser 4	Riser
0	0	0	Main A (Binary value 0) USE FOR ELEMENT.
1	0	0	Main B (Binary value 1)
0	1	0	Main C (Binary value 2)
1	1	0	Main D (Binary value 3)
0	0	1	Auxiliary A (Binary value 4)
1	0	1	Auxiliary B (Binary value 5)
0	1	1	Auxiliary C (Binary value 6)
1	1	1	Auxiliary D (Binary value 7)

Floor Number and Front or Rear Opening DIP switch SW2, the first seven switches set the floor address for the board, beginning with Floor 1. Switch **REAR** selects Front or Rear opening (ELEMENT uses FRONT OPENINGS ONLY).

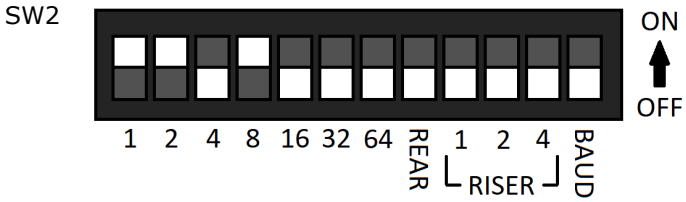

When setting addresses, use the values silk screened on the circuit board, not those shown on the DIP switch.

OFF=FRONT, ON=REAR

Floor Address example = 11

ON switch adds its value to floor addresses (binary format).

Baud Switch The Baud Switch is reserved for future use to select a different CAN Bus baud rate should it become necessary. For now, the only option is to leave the baud switch off.

CAN Bus Termination The CAN Bus must be terminated ONLY ON THE LAST SC-3HN-2 connected to the wire drop (farthest board from Dispatcher).

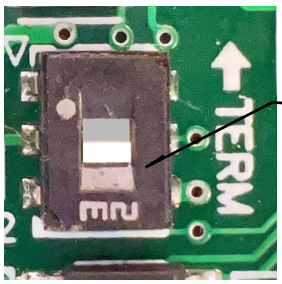

TERM Switch OFF/ Unterminated All but last board

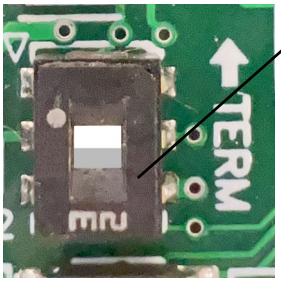

TERM Switch ON/ Terminated Last board on wire drop ONLY.

On Board Diagnostics Two LEDs provide diagnostic information: The ON LED (green) and the FLT LED (red).

ON LED The ON LED reflects power/communications status.

- **ON**: Communications OK
- **OFF**: Board is not receiving power or has no software loaded
- Blinking: Communications error - more than ten seconds have passed without a message from the group dispatcher

(FLT) FAULT LED The FLT LED reflects the status of the analog outputs.

- **ON Steady:** Internal fault
  - Replace board if problem persists
- **OFF**: No Errors detected
- **Blinking**: Output overload or disconnection. Pressing the Reset button on the SC-3HN-2 board will clear a blinking Fault LED
  - Overload or Output Shorted: Excessive current draw. Automatically resets when the current draw is corrected, and the call button is pressed again
  - Two or more SC-3HN boards have the same floor address and riser ID.

Inventory When all halls calls are installed and functioning properly, the system allows you to save them into memory (inventory them). In the future, when looking for a stuck switch, the same UI screen will automatically test all inventoried hall calls for you. See Hall Bus Inventory on page 2-17.

Serial Car Call Board

The MC-CPI-2 board, mounted in the car operating panel, converts the discrete closures from the panel buttons and switches to serial data for the CAN bus. Unused spare inputs to and outputs from these boards are set to NOT USED at the factory. If a CPI-2 board is replaced in the field or if controller software is upgraded, it is very important to check programmable CPI-2 board inputs and outputs and verify unused connections are set to NOTUSED. The CPI-2 board is also responsible for landing system control. For additional information, please refer to page 2-35.

Installation Instructions

1. Turn the power off at the main disconnect.
2. Mount the MC-CPI-2 board(s) inside the COP using the supplied hardware and providing sufficient clearance for the components. Verify board address, page 1-52.
3. CAR CALL indicator LEDs or lamps must be powered from the CC24V supply. Other lamps, PIs, and buzzers must be powered from the 24V supply. Button contacts are generally connected to Common and to their specific I/O terminal.
4. Refer to the job prints to wire the MC-CPI-2 board.

Figure 1.3 MC-CPI-2 Serial Car Operating Panel Board

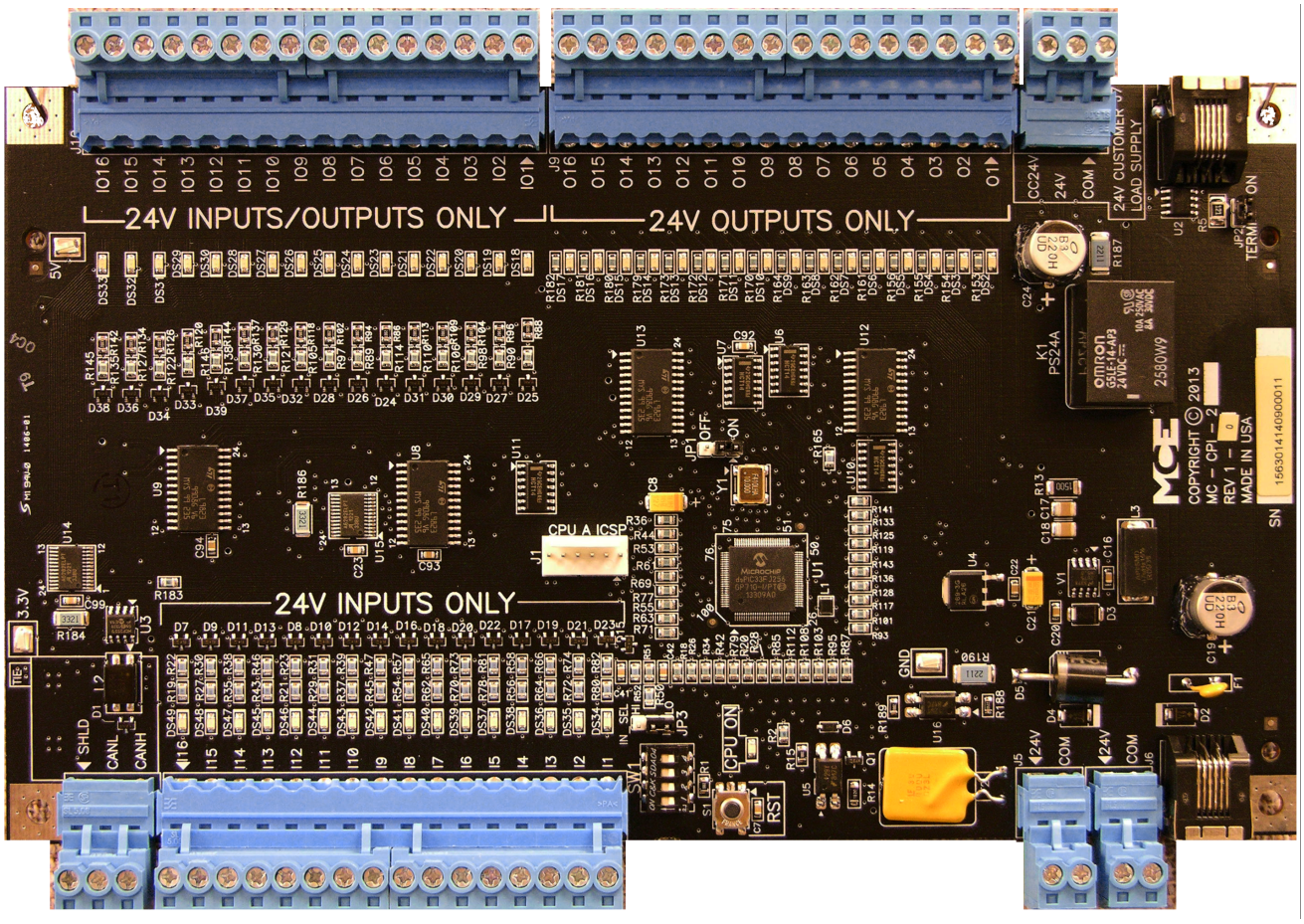

Figure 1.4 CPI-2 Board Configuration

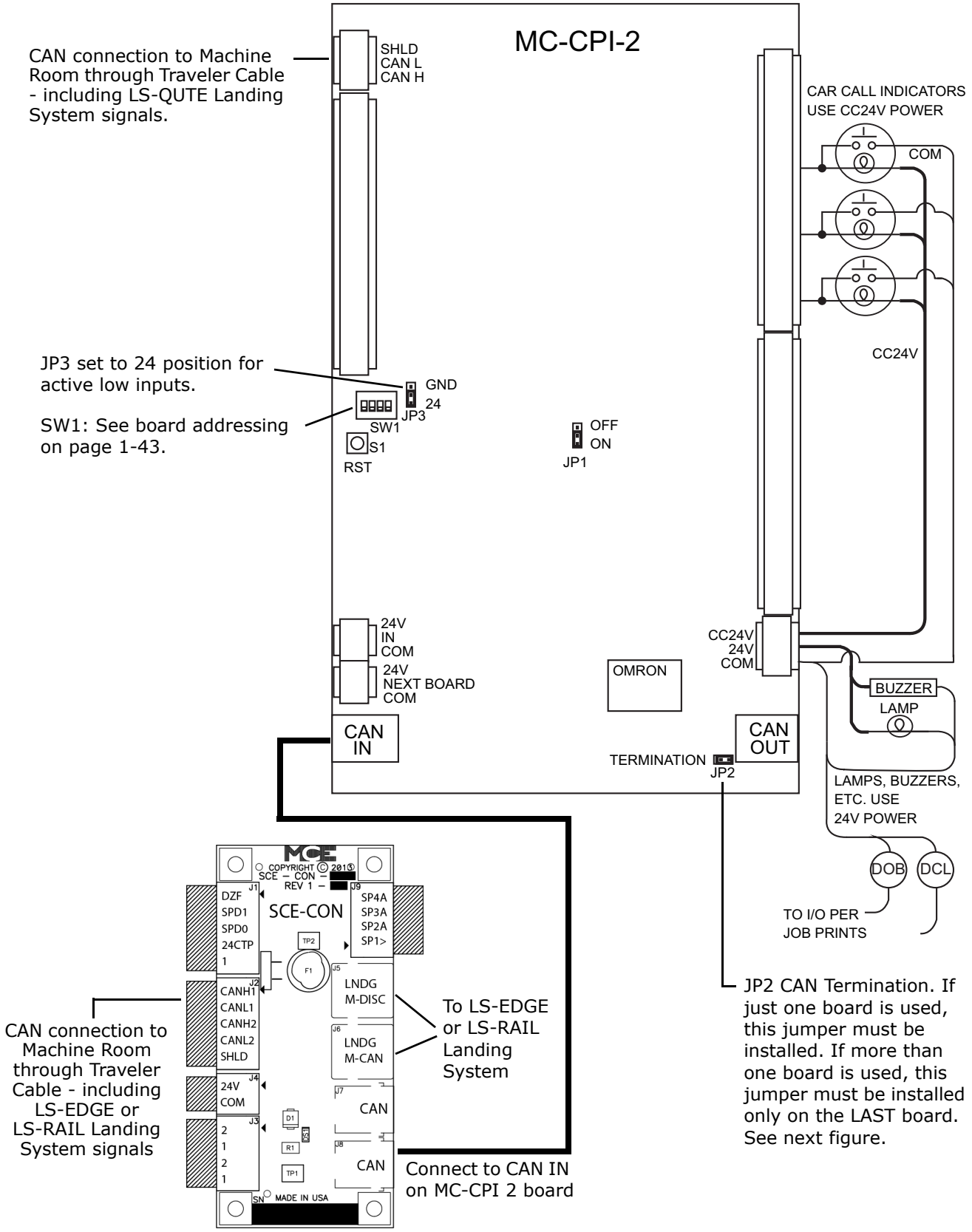

Figure 1.5 SCE-CPI-2 Interconnect

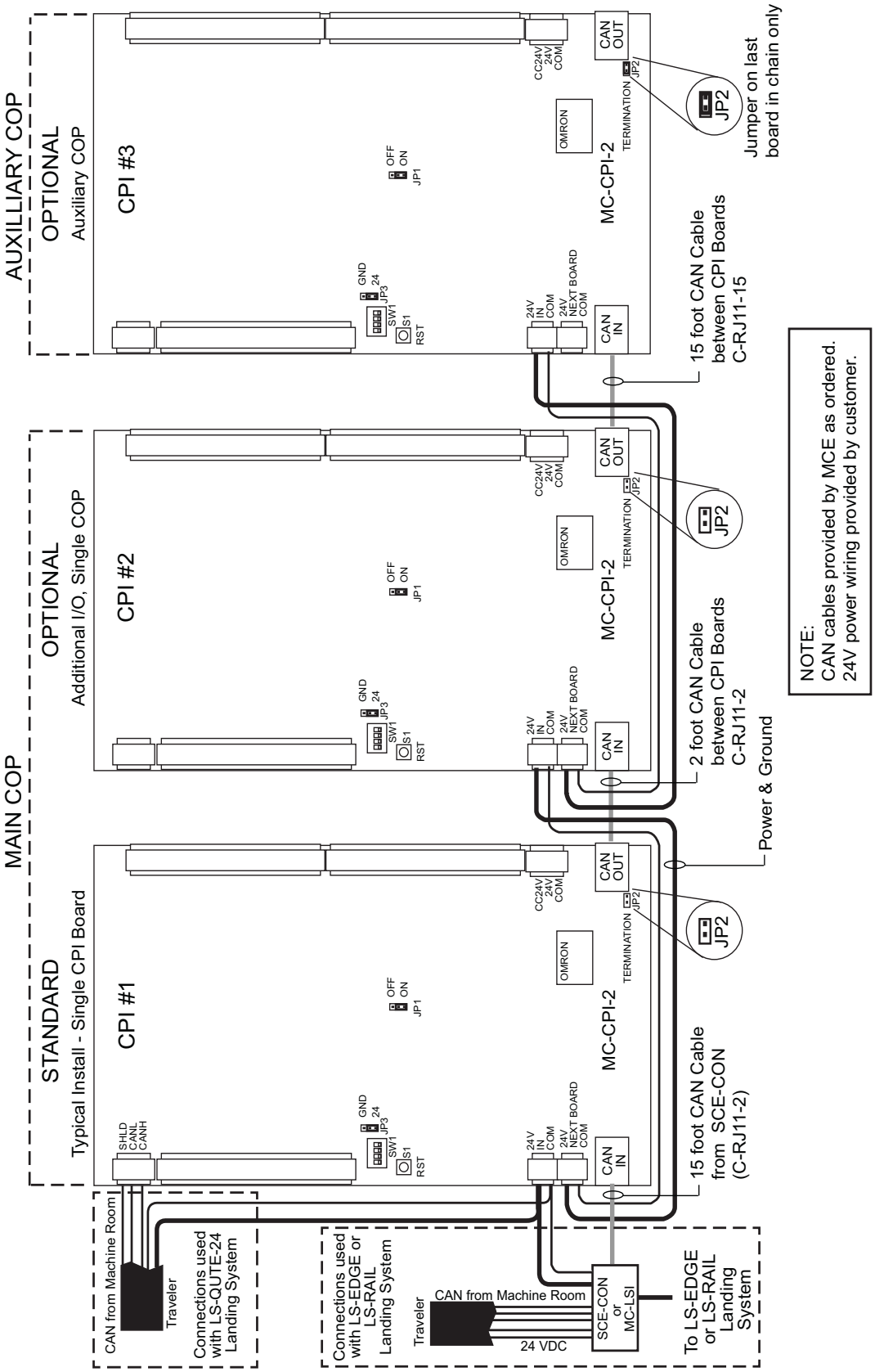

- DIP Switch SW1, **Board address switches**: Four-position DIP switch SW1 provides a unique address for each CPI board (you should never have two CPI boards with the same SW1 setting).

DIP 1	CPI Boards		
Board	**SW1**	**SW2**	**SW3**
0	Off	Off	Off
1	On	Off	Off
2	Off	On	Off
3	On	On	Off

- SW1, switch 3, must remain OFF at all times.
- SW1, switch 4, determines CAN baud rate:
  - ON: 500k - used if board is mounted INSIDE the Element controller cabinet
- OFF: 250k - default setting; use with board(s) mounted in COP

Lanterns and PIs

Install and set up lanterns and position indicators as shown in the job prints and as directed in the literature accompanying the fixture.

Serial PI Configuration

Element is compatible with CE or E-Motive serial fixtures.

- CE: All switches on SCE-CPU board DIP switch S2: ON
- E-Motive: All switches on SCE-CPU board DIP switch S2: OFF

Door Operator

Door operators interface to the SCE-CPU, SCE-HVI, and MC-CPI-2 boards. Door operator connections are shown in the prints for the specific job. Separate documentation is also included with the door operator itself. Several door operators are supported.

- MCE Universal door control: Refer to job prints.
- MCE SmarTraq harmonic: See job prints and MCE Manual 42-02-D008 shipped with door operator.
- GAL MOVFR or MOD: See job prints and GAL Instruction shipped with door operator.

Each door operator is shipped with installation instructions. Use these installation instructions and the prints for the individual job to install the door operator. For additional information, see also Door Operator Compatibility on page 2-49.

Door Position Monitor Switch

If you are in a jurisdiction where ASME A17.1 - 1996 or later is being enforced, Door Position Monitor switch(es) connected to the DPM input must be added to monitor the position of the closed doors. This must be a separate physical limit switch that makes up approximately 1 to 2 inches before the doors lock. The DPM switch connects to a CPI-2 board usually located on the cartop or in the COP enclosure. See your job prints.

Load Weigher

For customer provided load weighers, the Element controller provides the following discrete inputs:

- Load Light Input - When activated the elevator will only allow the number of car calls specified by the Light Load Car Call Limit parameter to be registered. If more are registered, all car calls are canceled. A discrete load weigher contact is typically wired to this input, indicating that a very minimal passenger load exists in the car. The controller uses this input as an anti nuisance tool by limiting the number of car calls that may be placed while this input is active.
- Load Disp - This input indicates that the car is loaded to a point at which it will prepare to leave the lobby (begin closing doors).
- Load Heavy - This input indicates that the car is loaded to the point at which it should no longer accept hall call assignments (heavy load bypass). A “discrete” load weigher contact is typically wired to this input, usually indicating that the load is 75%-80% of full load. The controller uses this input to temporarily bypass hall calls to avoid overload.
- Load Over - While the car is stopped at a landing with the doors open, activation of this input will hold the doors open until the overload condition is cleared. Fire service overrides Load Over.
- Load Over2 - (Over 125% of Full Load) While the car is stopped at a landing with the doors open, activation of this input will hold the doors open until the overload condition is cleared. Fire service does not override Load Over2.

Traction Elevator Adjustment

Controller and drive parameters are set at the factory according to the requirements for the job site. Each controller is accompanied by a final configuration document for the controller and the drive respectively.

Caution

Element Contract Speed should not be changed from the actual car contract speed setting (Config 02 > System Control Parameters > Contract Speed) and must match the Magnetek drive A1 Contract Speed Setting or TORQMAX US06 Contract Speed Setting. If you need to slow the car for testing, use the Element CONFIG02 > SYSTEM CONTROL PARAMETERS > HIGH SPEED setting.

Counterweight Position

1. On Inspection operation, run the car until the counterweight is directly adjacent to the car in the hoistway.
2. Verify car position on the Home screen.
3. In the CONFIG 02 > HOISTWAY SETUP menu, set COUNTERWEIGHT POSITION to the observed height.

Brake Coordination

1. Verify that the machine brake has been set to hold 125% of load.
2. Adjust speed pick delay parameter (CONFIG 02 > SYSTEM CONTROL PARAMETERS) so that the brake is fully picked just as the motor first spins. The goal is to avoid spinning the motor before the brake is picked but not to introduce so much delay that rollback occurs.
3. Now that the car is running on automatic operation, it is time to adjust for a contract speed. While observing the SPD: displays on the touch screen, set a multi-floor call and adjust drive parameter A1 CONTRACT MTR SPD until the car velocity matches the setting under CONFIG 02/SYSTEM CONTROL PARAMETERS/SPEED. Increasing the drive parameter will result in a faster moving car.

Hoistway Learn (Landing System Learn)

After installing the leveling and terminal magnets, you will need to perform a learn operation to learn floor and terminal positions. If floor level magnets have not been positioned accurately enough, any offset can be adjusted in software (+/- 1 inch).

1. Place car on Test and Machine Room Inspection using switches on SCE-CPU.
2. Set the FLT BYPASS jumper in the BYPASS position.
3. Select the UTILS menu. Select CONSTRUCT AND BYPASS FAULTS.
4. Select AUTOMATIC FAULT BYPASS DISABLED; press OK to ENABLE. Press EXIT. Faults are now bypassed.
5. Move car on inspection to about six (6) or more inches above bottom terminal landing.
6. Select LANDING SYSTEM UTILITIES. Select HOISTWAY LEARN (LANDING SYSTEM LEARN). Press LEARN.
7. Set Machine Room Inspection switch to NORM. The screen will display FINDING BOTTOM, followed by BOTTOM FOUND. The car will then begin to run up the hoistway.

During the run, the screen will display LEARNING. Once the top floor is learned the screen will display FINALIZING, followed by STORING HOISTWAY, and finally DONE STORING HOISTWAY.

8. Press DONE. Press EXIT. Press EXIT on the following screens until the UTILS home menu appears
9. Select CONSTRUCT AND BYPASS FAULTS. Press AUTOMATIC FAULT BYPASS ENABLED. Press OK to disable fault bypass.
10. Move the FAULT BYPASS jumper to the NORM position. Faults are no longer bypassed.

Tuning

For the best possible control through the speed range, the drive may need to be tuned to the characteristics of the motor according to the instructions in the drive manual.

Magnetek HPV 900 Series 2

Refer to the Appendix of the Magnetek drive manual and follow the Adaptive Tune instructions provided.

TORQMAX F5

Refer to Motor Learn in the TORQMAX F5, v3.21 manual.

Drive Response

Depending on how the drive is tuned, the amount of lag between the commanded speed and drive response can vary. As a result, as the drive is adjusted, the Profile Advance parameter (CONFIG 02 > SYSTEM CONTROL PARAMETERS) will need to be changed as well. Use the information below along with the information in the figure Response Adjustment on page 1-57, and the tuning instructions following the figure to make these adjustment.

- If lag delay is insufficient (see Figure 1.18 (b)), the elevator will plow into a landing. The acceleration and jerk rate during deceleration to a landing will be greater than profile values indicate.
- If lag delay is excessive (see Figure 1.18 (c)), the elevator will drag into a landing. The acceleration and jerk rate during deceleration to a landing will be less than profile values indicate. In addition, a discontinuity in the profile will occur during the transition from acceleration to deceleration for movement between floors where a stabilized speed (contract speed) is not reached (short runs).
- To adjust lag delay:
  - Set drive analog output 1 to output the Speed Command (TORQMAX LA31=3, Magnetek C4 submenu > Analog Output 1 > Speed Command).
  - Observe the commanded speed on an oscilloscope. Perform one-floor-run movement and observe the peak acceleration transitioning to peak deceleration as the elevator reaches its peak speed (below contract speed). This transition should have no vertical discontinuity (too much lag delay). This transition adjustment is only valid when the elevator is unable to reach contract speed for the profile under normal operation. Adjust lag delay until the vertical discontinuity is eliminated.
- TORQMAX/KEB: Generally, the Profile Advance (CONFIG 02 > SYSTEM CONTROL PARAMETERS) will be within 50 to 150 milliseconds (0.05 - 0.15 seconds).
- Magnetek: Generally, the Profile Advance (CONFIG 02 > SYSTEM CONTROL PARAMETERS) will be within the following range (in milliseconds):

$$\frac{1000}{\text{*Response}} \leq \text{Profile Advance} \leq \frac{2000}{\text{*Response}}$$

* Response value is located in the Magnetek HPV A1 Drive Menu.

Figure 1.6 Response Adjustment

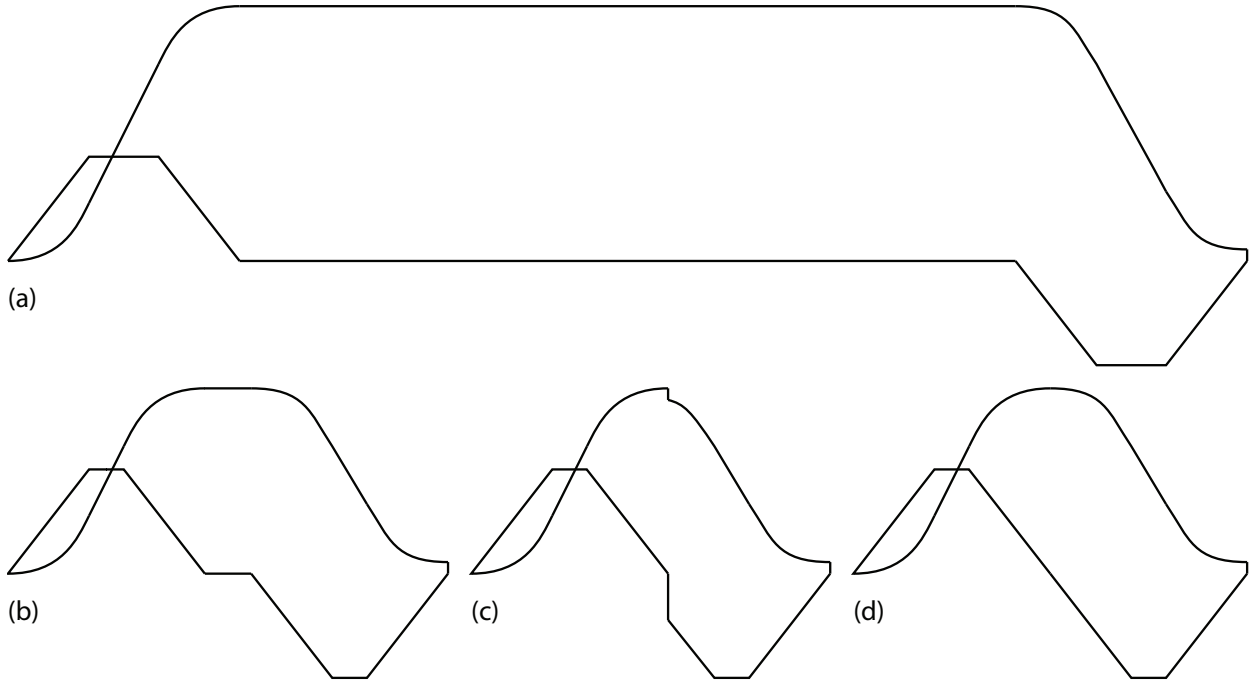

Velocity and Acceleration: (a) profile at contract speed; (b) insufficient lag compensation with profile at less than contract speed; (c) excessive lag compensation with profile at less than contract speed; (d) optimum lag compensation with profile at less than contract speed.

Tuning

1. For initial setup:
   - TORQMAX F5: set Profile Advance parameter to 0.10.
   - Magetek: set Profile Advance parameter to 1 divided by response.
2. Depending upon drive tuning, the leveling distance may have to be generous to allow the elevator speed to completely transition to the requested leveling speed. for initial use, set the Leveling Distance parameter (SYSTEM CONTROL PARAMETERS) to 2.0 inches. (Once the drive is tuned, this may be set to a more optimal value.)
3. Depending on drive tuning, the transition from leveling speed to zero speed may be sluggish. For initial use, set Auto/Norm Slew Rate (SYSTEM CONTROL PARAMETERS) to 2.0 ft/s2 or greater. (Once the drive is tuned, this may be set to a more optimal value.)

S-Curve

1. Make reference runs on TEST mode at contract speed in the middle of the hoistway to avoid limits.
2. Adjust the S-Curve through the CONFIG 02 > S-CURVE menu to achieve desired acceleration/deceleration and jerk rates. Please refer to “S-Curve” on page 2-11.
3. Place calls to various floors and observe.
4. Floor level positions may be adjusted through the CONFIG 02 > HOISTWAY SETUP menu. FLOOR OFFSET adjustments in the + direction “raise the floor.” FLOOR OFFSET adjustments in the - direction “lower the floor.”

One Floor Run

1. Run the elevator on Inspection between landings and verify that it moves properly.
2. Near a landing, take the elevator off Inspection and verify that it corrects to a landing and stops properly.
3. Make a one floor run and observe that the car levels accurately.

Contract Speed Operation

Now that the car is running on automatic operation it is time to adjust for contract speed.

1. Run the elevator between landings. Verify that it moves properly. Observe starting and stopping properties.
2. Increase the number of landings travelled until the car reaches contract speed. Adjust drive if required.
3. Place car on Normal operation and place a call to the top terminal. The car must land without a fault.
4. Place a call to the bottom terminal. The car must land without a fault.

Magnetek

While observing the SPD: display on the touch screen, set a multi-floor call and adjust drive parameter A1 CONTRACT MTR SPD until the car velocity matches the setting under CONFIG 02 > SYSTEM CONTROL PARAMETERS > CONTRACT SPEED. Increasing the drive parameter will result in a faster moving car.

TORQMAX

While observing the SPD: display on the touch screen, set a multi-floor call and adjust Machine Data parameter LN02 GEAR REDUCTION RATIO until car velocity matches the setting under CONFIG 02 > SYSTEM CONTROL PARAMETERS > CONTRACT SPEED. Increasing LN02 results in a faster moving car.

Relevel Operation

On Inspection, move the car to the bottom landing in the leveling zone but not level. Take the car off Inspection and observe that it re-levels into the landing. If the car attempts to re-level but cannot:

1. If the car attempts to relevel but cannot:
   - Adjust CONFIG 02 > SYSTEM CONTROL PARAMETERS > LEVELING SPEED to get the car to move.
   - Check that the car is not opening the down final limit.
2. If a fault code is displayed, troubleshoot and correct the fault.
3. Verify that the position indicator matches the car position.

Terminal Switch Configuration

The Element controller's "Terminal Switch Learn" is used to configure virtual NTS/ETS/ETSL switches and to determine optimal placement of physical switches and magnets. Before positioning physical ETS/ETSL switches in the hoistway or ETS-LS magnets on the tape or rail, configure the controller with VIRTUAL NTS and ETS switches (CONFIG02 > ETS Switches). Then using (UTIL > LANDING SYSTEM UTILITIES > TERMINAL SWITCH LEARN), enter the desired percentage of rated car speed at which the car should be traveling when each switch is encountered. Follow on-screen instructions for learning terminal switch configuration.

In the following table, enter the values generated for each of the switches and place physical switches and/or magnets accordingly. Where physical switches and/or landing system magnets are used for ETS/ETS-LS/ETSL, these will need to be enabled in the CONFIG02 > ETS switch screen and the Terminal Switch Learn process will need to be repeated before the Safety Tests are done and the car is turned over.

Note: For *reduced stroke buffers,* the Terminal Switch Learn process will need to be done twice to generate recommended distances and speeds for both ETS magnets on the landing system tape (ETS-LS) and ETSL cam-actuated switches in the hoistway (see Terminal Switch Learn on page 1-60).

Table 1.3 Recommended Emergency Terminal Switch Configuration Calculation

Caution: When performing the ETSLD test, be sure that the speed entered for the test [UTILS > SAFETY TESTS > COMLIANCE TESTING > SPEED] does not exceed the rated buffer speed.

UTIL > LANDING SYSTEM UTILITIES > TERMINAL SWITCH LEARN	"**SWITCH**" and desired percentage of car speed when switch is actuated	Screen	**DISTANCE** (in.)	**LEARNED SPEED**	**DELTA SPEED** (fpm)	**TEST SPEED** (fpm)
			Choose the lesser distance (top or bottom) from the terminal landing for "switch" placement	Choose the greater learned speed (up or down)	These are typically the same, but choose the lesser where there is a difference.	Add the learned speed + delta speed + 5 fpm
	NTS1 _____% (78% typical) (Closest switch to terminal landing)	CONFIG 02 NTS1 Switches	USL1 Distance/ DSL1 Distance	USL1 Speed/ DSL1 Speed	USL1 Delta-L Speed/ DSL1 Delta-L Speed	USL1-L Test Speed/ DSL1-L Test Speed
					USL1 Delta-H Speed/ DSL1 Delta-H Speed	USL1-H Test Speed/ DSL1-H Test Speed
	NTS2 _____% (74% typical)	CONFIG 02 NTS2 Switches	USL2 Distance/ DSL2 Distance	USL2 Speed/ DSL2 Speed	USL2 Delta-L Speed/ DSL2 Delta-L Speed	USL2-L Test Speed/ DSL2-L Test Speed
					USL2 Delta-H Speed/ DSL2 Delta-H Speed	USL2-H Test Speed/ DSL2-H Test Speed
	ETS _____% (90-95%)	CONFIG 02 ETS Switches	UETS Distance/ DETS Distance	UETS Speed/ DETS Speed*	UETS Delta Speed/ DETS Delta Speed	UETS Test Speed/ DETS Test Speed
	ETSL** _____%		UETS Distance/ DETS Distance	UETS Speed/ DETS Speed	UETS Delta Speed/ DETS Delta Speed	UETS Test Speed/ DETS Test Speed

* Where magnets are placed on the tape as an ETS backup, manually enter the UETS/DETS speed in the CONFIG 02 > ETS Switches > U/DETS-LS OVERSPEED box.

** For reduced stroke buffers only. ETSL % = ETS % x Rated Buffer Speed/Rated Car Speed

Terminal Switch Learn

The Terminal Switch Learn procedure is used to learn the locations of the NTS and ETS switches. ETS switches are required where full-stroke buffers are used and the rated car speed is greater than 200 fpm/1.0m/s and ETSL switches are required where reduced-stroke buffers are used. Primary ETS/ETSL switches can either be “virtual” or “physical cam-operated switches”. Optional ETS-LS magnets can be used as a backup to the primary switches. If the installation includes reduced stroke buffers (rated for less than contract speed), some jurisdictions may *require* the ETSL switches to be of the cam-operated type. Use one of the following procedures to determine and learn the optimal location/placement of the virtual switches, physical switches and/or magnets.

NTS/ETS Switches with Full Stroke Buffers

Virtual NTS/ETS (Landing system position count) Use this procedure to learn the positions of the virtual NTS/ETS switches.

1. Calculate the ETS % to use for terminal switch learn by dividing the buffer rated speed by the actual car contract speed times 0.91 = _____. For example 200 fpm/350 fpm x 0.91 = ETS % = 052. For contract speed rated buffers enter 091 for ETS %.
2. Place the car on MACHINE RM INSPECTION (INSP/NORM switch = INSP), and move the car to the bottom terminal landing.
3. Select CONFIG 02 > ETS SWITCHES. Verify/set U/DETS-LS OPTION = NO and U/DETS OPTION = VIRTUAL. Press SAVE, if changes were made, and EXIT.
4. Select UTILS > LANDING SYSTEM UTILITIES > TERMINAL SWITCH LEARN. Press NEXT twice. Enter the value for ETS% calculated in step 1. Press ENTER.
5. Press NEXT twice. The car will travel up to learn the top terminal limits. Press NEXT again. The car will travel down to learn the bottom terminal limits.
6. At the end of the learn operation, observe and record UETS position _____ inches and speed _____ FPM. Also record DETS position_____ inches and speed_____ FPM.
7. Select CONFIG 02 > ETS SWITCHES. View UTS SPEED and DETS SPEED and confirm that the values match the values determined in step 6.
8. If ETS-LS Magnets are to be used as a backup, proceed to step 14.

Physical ETS (Cam-operated switches) Use this procedure if the primary ETS switches are physical cam-operated switches. Where reduced-stroke buffers are used, some jurisdictions (e.g., TSSA) may require the ETSL switches to be of the cam-operated type. First perform steps 1 through 6 above. Then continue with step 9.

9. Install the physical switches at the UETS and DETS positions recorded in step 6.
10. Select CONFIG 02 > ETS SWITCHES. Set U/DETS OPTION = PHYSICAL. Press SAVE and EXIT.
11. Relearn the limits (repeat steps 4 and 5). Observe and record UETS position _____ inches and speed ____FPM. Also record DETS position_____ inches and speed____FPM.
12. Select CONFIG 02 > ETS SWITCHES. View UTS SPEED and DTS SPEED and confirm that the values are close to the values determined in step 6.
13. If ETS-LS Magnets are to be used as a backup, proceed to step 14.

ETS-LS (Magnets detected by the landing system) Recommended for redundancy to the physical (cam-operated) or virtual ETSL switches where reduced stroke buffers are used. May also be used as a backup for ETS limits where full-stroke buffers are used.

14. Using the greater of the two position distances determined in step 6, place the ETS (striped magnets) as follows (refer to Figure 1.11.); position the UETS striped magnet by measuring from the center of the top floor door zone magnet to the top edge of the UETS striped magnet. Position the DETS striped magnet by measuring from the center of the bottom floor door zone magnet to the bottom edge of the DETS striped magnet.
15. Select CONFIG 02 > ETS SWITCHES. Select U/DETS-LS OVERSPEED and enter the sum of the highest of the two speed values determined in step 6 plus 10 fpm. Also set U/DETS-LS OPTION = YES. Press SAVE.

After completing pertinent procedures above, make multi-floor and one-floor runs into both terminals. Verify correct landing at the terminal floors.

NTS/ETSL Switches with Reduced Stroke Buffers

ETS-LS (Magnets detected by the landing system) Use this procedure where ETS-LS magnets are used as a backup to virtual or physical ETSL switches.

1. Place the car on MACHINE RM INSPECTION (INSP/NORM switch = INSP), and move the car to the bottom terminal landing.
2. Select CONFIG 02 > ETS SWITCHES. Verify/set U/DETS-LS OPTION = NO and U/DETS OPTION = VIRTUAL. Press SAVE, if changes were made, and EXIT.
3. Select UTILS > LANDING SYSTEM UTILITIES > TERMINAL SWITCH LEARN. Press NEXT twice. Enter the value for ETS% for Contract Speed (091). Press ENTER.
4. Press NEXT twice. The car will travel up to learn the top terminal limits. Press NEXT again. The car will travel down to learn the bottom terminal limits.
5. At the end of the learn operation, observe and record UETS position _____ inches and speed _____ FPM. Also record DETS position_____ inches and speed_____ FPM.
6. Using the greater of the two position distances determined in step 5, place the ETS (striped magnets) as follows (refer to Figure 1.11.); position the UETS striped magnet by measuring from the center of the top floor door zone magnet to the top edge of the UETS striped magnet. Position the DETS striped magnet by measuring from the center of the bottom floor door zone magnet to the bottom edge of the DETS striped magnet.
7. Select CONFIG 02 > ETS SWITCHES. Select U/DETS-LS OVERSPEED and enter the sum of the highest of the two speed values determined in step 5 plus 10 fpm. Also set U/DETS-LS OPTION = YES. Press SAVE.

Virtual NTS/ETSL (Landing system position count) Proceed to the Virtual NTS/ETS instruction for full stroke buffers and perform steps 1 through 7.

Physical ETSL (Cam-operated switches) If the primary ETSL switches are physical cam-operated switches, proceed to the Physical ETS instruction for full stroke buffers above and perform steps 9 through 13.

After completing pertinent procedures above, make multi-floor and one-floor runs into both terminals. Verify correct landing at the terminal floors.

Adjustment Problems

Performance and Ride Quality

Learning system inertia can provide better dynamic performance and better ride quality.

TORQMAX

1. With a balanced load in the car, bring the elevator to the middle of the hoistway. On Inspection, move the car first up, then down. Actual torque should be equal but in the opposite direction (see drive Home/Diag/Screen #3).
2. Move the car to the bottom landing. Set drive LL10 INERTIA LEARN to Start to begin the inertia learn procedure (Home > Prog > Tune Parameters).
3. Place the car on Inspection. On the touch screen select CONFIG 02 > SYSTEM CONTROL PARAMETERS. Scroll down to FOLLOWING ERROR, record the current value and then set this parameter to 50% of the current value. Press ENTER and then SAVE. Return the car to automatic operation.
4. Run the car at full contract speed from the bottom landing to the top landing and then back down to the bottom landing. Repeat the run from bottom to top and then top to bottom.
5. After four runs, the drive will automatically calculate the inertia value based on the average of the four runs. The value will be saved on the drive Home > Prog > Control Settings > LC41 SYSTEM INERTIA parameter.
6. Once inertia has been learned, LC02, LC42, LC43, and LC44 parameters can be adjusted. (Home > Prog > Control Settings)
7. Place the car on Inspection. On the touch screen select CONFIG 02 > SYSTEM CONTROL PARAMETERS. Scroll down to FOLLOWING ERROR and set parameter to the original value recorded in step 3. Press ENTER and then SAVE. Return the car to automatic operation.

Magnetek HPV S2

1. To perform this procedure, you will need to run the car at full contract speed with a balanced load.
   - Est Inertia can be viewed on the drive D1 Elevator Data menu.
   - Inertia can be adjusted on the drive A1 Drive menu.
2. Refer to Using the Software to Estimate the System's Inertia in the appendix of the Magnetek HPV AC Drive Technical Manual and follow that procedure.
3. With system inertia properly adjusted, final tuning of the speed regulator can be performed. The Response parameter on the drive A1 Drive Menu is one parameter that can be used to adjust the speed regulator. Please see the Magnetek HPV AC Drive Technical Manual for tuning/adjustment procedures.

Speed Changes Felt Excessively in Car

During high speed, if the speed change from accel to high speed or from high speed to decel can be felt excessively in the car:

- Check Jerk settings. See S-Curve on page 2-11. Lower values result in smoother transitions.
- MAGNETEK: Consider Estimation of System Inertia, A0/A1 Response, A0/A1 Inner Loop Xover, A0/A1 Gain Reduce Mult, and A1/A0 Gain Chng Level.
- TORQMAX: Consider Inertia Learn.
-

Car Overshoots or Motor Overload/Overvolt

- Refer to drive manual for error definition and troubleshooting instructions
- Check counterweighting is correct.
- Decrease Standard Acceleration, Standard Deceleration, Standard Roll Jerk, and Standard Stop Jerk.
- Increase drive gains, Magnetek A0/A1 RESPONSE, TORQMAX LC03, LC04, LC08, LC09.
- Shut off power. Wait 1 minute to drain DC voltage from dynamic braking circuit. Verify no DC voltage with voltmeter.
- Check value of braking resistance (RB resistors, approximately 3 times the measured brake coil resistance is a good starting point). Check brake circuit connections and brake resistor slip rings.

Car Oscillates at Contract Speed

- Verify all motor parameters correctly set and encoder mounted securely (no vibration).
- Magnetek: Verify Estimation of System Inertia, A0/A1 Inner Loop Xover, A0/A1 Gain Reduce Mult, and A0/A1 Gain Chng Level. Verify A0/A1 Response is not set too high.
- TORQMAX: Verify LC03, LC04, LC08, and LC09 are not set too high.

Electrical Noise

If the motor makes excessive electrical noise or draws higher than normal current:

1. Check Encoder Polarity.
2. Check TORQMAX LE04 Encoder 1 Sample Rate (Home > Prog > Encoder). Try changing it from 4 to 8 or from 8 to 16.
3. Check TORQMAX LC44. Try changing to a value other than 0 (Home > Prog > Control Settings).
4. Verify traction sheave diameter and correct entry in drive parameters.
5. Verify machine gear reduction ratio and correct entry in drive parameters.
6. Verify rated motor speed and correct entry in drive parameters.
7. Verify acceleration and deceleration integral and proportional gain drive settings.

Duplex Operation

For duplex operation, serial hall calls are connected to both cars as shown in the job prints. One car is selected to be the master dispatcher; the other is selected to be a local.

1. For the car selected as the Dispatcher, set CONFIG 02, System Control Parameters, Primary Dispatcher to YES.
2. For the other car, set Primary Dispatcher to NO.

Interconnect

Make all connections as shown in the prints for the job.

Duplex Elevator Hall Call CAN3 Interconnect

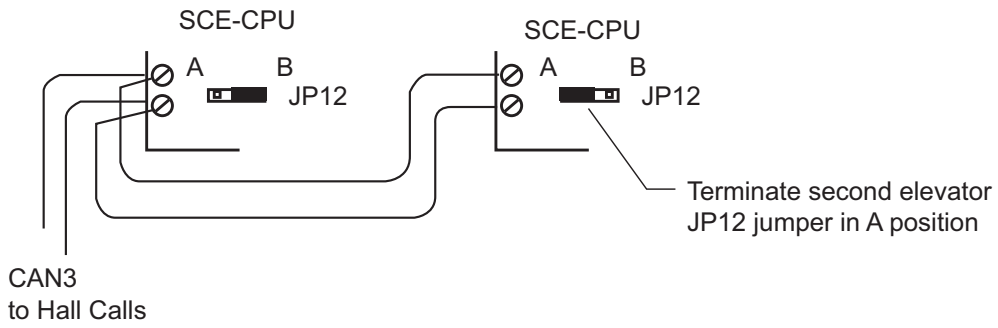

Power Phasing

When cars are paired for duplex operation, input power phasing to the two must match.

1. Connect a multimeter, set for AC voltage, between a 2 Bus terminal on one controller and a 2 Bus terminal on the second controller. If the meter reads close to zero (0) volts, the two are in phase. If not:
   - Swap two of the L1/L2/L3 inputs on one car and repeat step 1.

Traction Acceptance Tests

The UTILS, Safety Test menu will guide you through test instructions for those tests for which automated assistance is pertinent. See page 1-67.

Manual Tests

Manual tests include:

- Safety string test
- Motor contactor proofing
- Brake contactor proofing, page 1-66
- Ascending car overspeed, page 1-66
- Unintended motion, page 1-66

Safety String Test

This test verifies the Safety String is working correctly.

SAFH Safety String Test

1. Remove the wire from SCE-HVI board terminal SAFH or activate any safety device in the string.
2. The message SAFH LOW will appear on the display.
3. Verify that the car cannot be run.
4. Reinstall the wire.

SAFC Safety String Test

1. Remove the wire from SCE-HVI board terminal SAFC or activate any safety device in the string.
2. The message STOP SW ON will appear on the display.
3. Verify that the car cannot be run.
4. Reinstall the wire.

Motor Contactor Proofing Test

This test simulates a stuck motor contactor. The test should be performed with the car stopped and with the car in motion. Once the fault is generated, the car should not be allowed to move until the contactor is unstuck.

Car Stopped at Floor This test is performed with the car stopped at a floor.

1. Use a non-metallic object to activate the PM contactor.
2. Observe that the car will not run. Touch screen displays “PMP failed to turn off.”

Car in Motion The car is in motion when this test is performed.

1. Place a call.
2. Once the car is in motion, use a non-metallic object to activate and hold the PM contactor “on.”
3. After the car stops at the designated floor, verify that it will not continue to run.

Brake Contactor Proofing Test

This test simulates a stuck brake contactor. The test should be performed with the car stopped and with the car in motion. Once the fault is generated the car should not be allowed to move until the contactor is unstuck.

Car Stopped at Floor This test is performed with the car stopped at a floor.

1. Use a non-metallic object to activate the BR contactor.
2. Verify that the car will not run. Touch screen displays “BRP failed to turn off”.

Car in Motion The car is in motion when this test is performed.

1. Place a call.
2. Once the car is in motion, use a non-metallic object to activate and hold the BR contactor “on.”
3. After the car stops at the designated floor, verify that the car will not continue to run. (A UIM, unintended motion fault, may occur if the car drifts far enough).

Ascending Car Overspeed Test

The mechanic must determine appropriate weight, if any, to be placed in the car for this test.

1. Bring the empty car to the bottom floor with car and hoistway doors closed and locked.
2. Observe car speed on the touch screen HOME screen and stand by to engage brake if governor overspeed switch fails to open.
3. Use your preferred method to mechanically release the machine brake. The car will start to move up the hoistway.
4. When the governor overspeed switch opens, the emergency brake will engage, stop, and hold the car.
5. With power off, reset the governor overspeed switch. With power on, and the car on Machine Room Inspection, reset the emergency brake: SCE-CPU board- Press/hold UIM RST for 8 seconds; Press FLT RST.

Emergency Brake Test - Unintended Motion, Rope Brake

This test verifies that moving the car away from a landing with both the car and Hoistway doors open (termed “Unintended motion”) will cause the Emergency Brake (Rope Gripper) to be deployed and that such deployment will stop the elevator. This test demonstrates that the emergency brake will stop the car within 48” from floor level if the car drifts from the floor.

1. For safety, station a mechanic at the landing where the test is to be performed.
2. Load the car as required (100% or 125% of load). Place barricades to prevent entry.
3. Bring the car to the landing away from the terminals and, and with both hoistway and car doors open, place on TEST service. An easy way to keep the doors open for this test is to activate either of the Car or Hoistway Door Bypass switches.
4. Use your preferred method to mechanically release the machine brake.
5. As the car moves away from the floor, observe that the emergency brake stops and holds the car within 48 inches (122 cm) of floor level.
6. To restore normal operation, verify doors are closed, place car on Inspection and press the UIM RESET button on the SCE-CPU board for a minimum of 8 seconds until the emergency brake resets. Press FLT RST on the SCE-CPU board.
7. When testing is complete, make sure that all appropriate data has been properly documented.

Automated Tests

Automated tests are accessed through the UTILS menu, SAFETY TESTS screen. Once you select SAFETY TESTS, a COMPLIANCE TESTING button appears. Press this button and you will be asked to select a Test Type and the speed at which the test will be conducted.

Danger

When running automated terminal/slowdown switch tests, be aware that the speed you have selected must be sufficient to trip the unit under test. Switches not being tested are disarmed so, if the unit under test does not trip, the elevator will continue with only the physical final limit providing protection. Be prepared to remove power if the unit under test does not trip.

Prepare drive for overspeed test

When instructed to "Prepare drive for overspeed test" do the following:

- Magnetek HPV900
  - On the Drive A1 Submenu, verify/set the Overspeed Mult parameter to the percentage of contract speed required for the test. Default = 125%.
  - On the Utility U0 Menu, set OVERSPEED TEST? = YES.
- TORQMAX F5
  - On the *Home* > *Prog* > *Tune Parameters* menu, set LL16 to the speed selected on the controller for the test.
  - To activate the drive's Overspeed Test, set LL15 to "Start without Scaling" on the drive's *Home* > *Prog* > *Tune Parameters* menu.

When you have selected Test Type and Speed, and prepared the drive for the overspeed test, click NEXT and follow on-screen instructions to complete the selected test. If you are running tests that do not incorporate emergency or terminal slowdowns, stay well away from them.

Note

Once a compliance test has been "armed" you may exit the test screen and go to the home screen to observe car speed, position, etc. while the test is executing.

Car/CWT safety

1. Electrical governor overspeed switch must be physically bypassed.
2. On Test operation, move car to starting position.
3. Place car on Machine Room inspection.
4. Place Flt Bypass jumper in Bypass position.
5. On Element touch screen select Utils > Construct and Bypass Faults. Select Construction/Fault Bypass Disabled; enable bypass, press OK. Press EXIT.
6. Select Utils > Safety Tests > Compliance Testing.
7. Select test and speed (Safety Rated + 10 FPM).
8. Prepare drive for overspeed test (see “Prepare drive for overspeed test” on page 1-67).
9. Return to the Element touch screen, press Next, and follow on-screen instructions.

Additional:

- To break traction, jump out the associated final limit switch and continue to run on Inspection in direction of test.

On Completion:

- Place Flt Bypass jumper in NORM position.
- Use touch screen to exit Compliance testing.
- Use touch screen to disable Construction/Fault Bypass.
- Remove any additional jumpers that have been used.

Car/CWT buffer

1. Final limit switch must be physically bypassed.
2. On Test operation, move car to starting position.
3. Place car on Machine Room inspection.
4. Place Flt Bypass jumper in Bypass position.
5. On the Element touch screen select Utils > Construct and Bypass Faults. Select Construction/Fault Bypass Disabled; enable bypass, press OK. Press EXIT.
6. Select Utils > Safety Tests > Compliance Testing.
7. Select test and speed (Contract or Rated Buffer).
8. Return to the Element touch screen, press Next, and follow on-screen instructions.

Additional:

- To break traction, jump out the associated final limit switch and continue to run on Inspection in direction of test.

On Completion:

- Place Flt Bypass jumper in NORM position.
- Use touch screen to exit Compliance testing.
- Use touch screen to disable Construction/Fault Bypass.
- Remove any additional jumpers that have been used

Electrical Governor

1. On Test operation, move car to starting position.
2. Place car on Machine Room inspection.
3. On the Element touch screen select Utils > Construct and Bypass Faults. Select Construction/Fault Bypass Disabled; enable bypass, press OK. Press EXIT.
4. Select Utils > Safety Tests > Compliance Testing.
5. Select test and speed (rated speed of switch + 10 FPM).
6. Prepare drive for overspeed test (see “Prepare drive for overspeed test” on page 1-67).
7. Return to the Element touch screen, press Next, and follow on-screen instructions.

On Completion:

- Use touch screen to exit Compliance testing.
- Use touch screen to disable Construction/Fault Bypass.

Inspection Overspeed

This test verifies that moving the elevator on Inspection Operation at a speed greater than 150 FPM will result in an emergency stop.

1. Place the car on machine room inspection.
2. Verify that Inspection Overspeed (Element touch screen CONFIG 02 > System Control Parameters > INSPECTION OVERSPEED) is set to 150 FPM.
3. Position the car in the middle of the hoistway.
4. On the Utils > Safety Tests > Compliance Testing screen, set test SPEED to 200 FPM.
5. Select the Inspection Overspeed test and press **NEXT**. Follow on-screen instructions.
6. Move the car in either direction on inspection.
7. When the car exceeds set value, the overspeed condition must stop the car and trip Inspection Overspeed Fault.

Note

Exit the compliance screen and go to Home screen to see the **SPB: INSPECT OVERSPD** fault.

Contract Overspeed

This test verifies that moving the elevator at a speed greater than the programmed contract overspeed value, will result in an emergency stop.

1. On test operation, position the car in the middle of the hoistway.
2. With car on **TEST**, place Machine Room inspection switch in **INSP** position.
3. On the Element touch screen, select **CONFIG 02 > System Control Parameters >CONTRACT OVERSPEED** and record the value: _____.
4. Also, in System Control Parameters, record the value for **FOLLOWING ERROR**: _____, then increase the value by 30%. Press **Enter** and then **Save**.
5. On the touch screen select **CONFIG 02 > S-CURVE > MANUAL ACCEL**, record the value: _____, then increase the value to 4.00. Press **Enter** and **Save**.
6. Prepare drive for overspeed test (see **Prepare drive for overspeed test** on page 1-64).
7. On the Element touch screen, select **UTILS > Safety Tests > Compliance Testing**.
8. Select the test (**CONFIG 02 > System Control > Contract Overspeed**) and set the speed to Contract Overspeed + 10 FPM.
9. Have a mechanic stand ready to measure the car speed with a hand held tachometer. Due to latency, the drive display of maximum speed is not accurate for this test.
10. Return to the Element touch screen, press **Next**, and follow on-screen instructions.
11. Upon completion, use the touch screen to exit Compliance testing.
12. Return **FOLLOWING ERROR** and MANUAL **ACCEL** to their recorded values.

Note

Exit the compliance screen and go to Home screen to see the **CONTRACT OVERSPD** fault.

Leveling Overspeed Test

This test verifies that the leveling zone does not exceed the maximum allowable distance and the car will perform an emergency stop if, while leveling, it is traveling at a speed greater than the Leveling Overspeed setting. (NOTE: Be sure to make note of the original parameter values so they can be restored after the test)

1. Record the values for **Level Overspeed**, **Level Speed,** and **Level Distance** (CONFIG 02 => System Control Parameters).
2. With the car at a landing on Machine Room Inspection, change the **Level Overspeed** to 1 FPM, **Level Speed** to 10 FPM, and the **Level Distance** to 5 inch; save.
3. Set **Preopening** to **Yes** (CONFIG 01 => Elevator Features); save.
4. Return the car to automatic operation and register a call to an adjacent landing. Verify that when the car enters the leveling zone, the system detects a Leveling Overspeed Fault and performs an emergency stop. Following the emergency stop the car should level into the floor, if necessary.
5. Restore the parameters that were changed in steps 1 through 2 to their original values.

Emergency Terminal Switch Overspeed Test

Per switch, this test verifies that an emergency stop will be initiated if: Test run at UETS/DETS learned speed + UETS/DETS delta speed + 5FPM (CONFIG02 > ETS Switches).

- Test will be run in TEST mode (DETS moving down; UETS moving up).

Move the empty car far enough away from the terminal to achieve test speed by the time it reaches the ETS/ETSL switch. While testing, the car will run toward the terminal without initiating any form of slowdown. When the car activates the ETS/ETSL switch, it will execute an emergency stop. The car will then finish the run to a landing at leveling or correction speed.

1. Position the empty car far enough away from the target ETS/ETSL switch to allow a speed to be reached that exceeds the Overspeed value for that switch.
2. Go to Element touch screen > (CONFIG02 > ETS Switches). Note the UETS/DETS value for the emergency terminal switch to be tested.
3. Select **Test ETS Overspeed** test on the Compliance Testing screen. Set the test ***Speed*** to the UETS/DETS learned speed + UETS/DETS delta speed + 5FPM.

Danger

If the speed is set below the overspeed threshold, no slowdown will be initiated and the elevator/counterweight will strike the buffer.

4. Follow on-screen instructions and perform the test.
5. On the Home screen, verify that the appropriate faults are shown. The first fault will be SPA: UETS SPEED HIGH which will be shown momentarily, followed by Motion Shutdown, which is a latching fault. Press the **FLT RST** button to clear the fault.
6. Continue testing opposite direction emergency terminal switch by repeating steps 1 through 7.

NOTE: To observe each fault, go to the event log screen to observe the listed faults.

Switch Overspeed Tests

Table 1.4 Recommended Terminal Switch Configuration

When performing the ETSLD test, be sure that the speed entered for the test [UTILS→SAFETY TESTS→COMPLIANCE TESTING→SPEED] does not exceed the rated buffer speed.					
"SWITCH" and desired percentage of car speed when switch is actuated	Screen CONFIG 02, NTS1	DISTANCE (in.)	LEARNED SPEED	DELTA SPEED (fpm)	TEST SPEED (fpm)
		Choose the lesser distance (top or bottom) from the terminal landing for the "switch"	Choose the greater learned speed (up or down)	These are typically the same, but choose the lesser where there is a difference.	Add the learned speed + delta speed + 5 fpm
NTS1 ____% (Closest switch to terminal landing)		USL1 Distance/ DSL1 Distance	USL1 Speed/ DSL1 Speed	USL1 Delta-L Speed/ DSL1 Delta-L Speed	USL1-L Test Speed/ DSL1-L Test Speed
				USL1 Delta-H Speed/ DSL1 Delta-H Speed	USL1-H Test Speed/ DSL1-H Test Speed
NTS2 ____%	CONFIG 02 NTS2 Switches	USL2 Distance/ DSL2 Distance	USL2 Speed/ DSL2 Speed	USL2 Delta-L Speed/ DSL2 Delta-L Speed	USL2-L Test Speed/ DSL2-L Test Speed
				USL2 Delta-H Speed/ DSL2 Delta-H Speed	USL2-H Test Speed/ DSL2-H Test Speed
ETS ____% (90-95%)	CONFIG 02 ETS Switches	UETS Distance/ DETS Distance	UETS Speed/ DETS Speed*	UETS Delta Speed/ DETS Delta Speed	UETS Test Speed/ DETS Test Speed
ETSL** ____%		UETS Distance/ DETS Distance	UETS Speed/ DETS Speed	UETS Delta Speed/ DETS Delta Speed	UETS Test Speed/ DETS Test Speed

*Where magnets are placed on the tape as an ETS backup, manually enter the UETS/DETS speed in the CONFIG 02 ETS Switches U/DETS-LS OVERSPEED box.
**For reduced stroke buffers only. ETSL% = ETS% x Rated Buffer Speed/Rated Car Speed

NTS1 SWITCHES – LOWER OVERSPEED

1. Move the car to the opposite terminal landing from the NTS1 switch being tested (or far enough away to achieve rated car speed).
2. With the doors closed, make sure the car is on Test mode to disable door operation.
3. Go to UTILS => Safety Tests => Compliance Testing.
   - a. Touch the screen in the [Type] field and select **NTS1 Lower Overspeed**.
   - b. Touch the screen in the [Speed] field and enter the calculated value recorded in the **RECOMMENDED TERMINAL SWITCH CONFIGURATION GUIDE** above for the U/DSL1-L test speed for NTS1.
4. Touch [Next] and then [Top] for the USL1 switch, or [Bottom] for the DSL1 switch.
5. Observe that the car moves toward the opposite terminal landing at the speed entered in step 3b above, then does an emergency slowdown when it reaches the NTS1 position value for that terminal landing, and then levels into the terminal landing.
6. To test in the opposite direction, repeat steps 1-5.
7. To restore normal Test operation, touch [Exit] on the screen and put the Test switch back to the **NORM** position.

NTS1 SWITCHES – UPPER OVERSPEED

1. Move the car to the opposite terminal landing from the NTS1 switch being tested (or far enough away to achieve rated car speed).
2. With the doors closed, make sure the car is on Test mode to disable door operation.
3. Go to UTILS => Safety Tests => Compliance Testing.
   - a. Touch the screen in the [Type] field and select **NTS1 Upper Overspeed**.
   - b. Touch the screen in the [Speed] field and enter the calculated value recorded in the **RECOMMENDED TERMINAL SWITCH CONFIGURATION GUIDE** above for the U/DSL1-H test speed for NTS1.
4. Touch [Next] and then [Top] for the USL1 switch, or [Bottom] for the DSL1 switch.
5. Observe that the car moves toward the opposite terminal landing at the speed entered in step 3b above, then makes an emergency stop when it reaches the NTS1 position value for that terminal landing.
6. Observe that after several seconds, the car corrects to the first floor in a direction away from the terminal landing and shuts down.
7. To restore normal Test operation, press the **FLT RST** button on the SCE-CPU board and touch [Exit] on the screen.

Note

After completing the test in the down direction, if you need to move the car back down to the bottom landing in order to have enough distance in which to achieve the test speed for the up direction, the test will need to be aborted first, and then restarted when the car is at the bottom landing.

8. To test in the opposite direction, repeat steps 1-7.
9. To restore normal Test operation, touch [Exit] on the screen and put the Test switch back to the **NORM** position.

NTS2 SWITCHES – LOWER OVERSPEED

1. Move the car to the opposite terminal landing from the NTS2 switch being tested (or far enough away to achieve rated car speed).
2. With the doors closed, make sure the car is on Test mode to disable door operation.
3. Go to UTILS => Safety Tests => Compliance Testing.
   - a. Touch the screen in the [Type] field and select **NTS2 Lower Overspeed**.
   - b. Touch the screen in the [Speed] field and enter the calculated value recorded in the **RECOMMENDED TERMINAL SWITCH CONFIGURATION GUIDE** above for the U/DSL2-L test speed for NTS2.
4. Touch [Next] and then [Top] for the USL2 switch, or [Bottom] for the DSL2 switch.
5. Observe that the car moves toward the opposite terminal landing at the speed entered in step 3b above, then does an emergency slowdown when it reaches the NTS2 position value for that terminal landing, and then levels into the terminal landing.
6. To test in the opposite direction, repeat steps 1-7.
7. To restore normal Test operation, touch [Exit] on the screen and put the Test switch back to the **NORM** position.

NTS2 SWITCHES – UPPER OVERSPEED

1. Move the car to the opposite terminal landing from the NTS2 switch being tested (or far enough away to achieve rated car speed).
2. With the doors closed, make sure the car is on Test mode to disable door operation.
3. Go to UTILS => Safety Tests => Compliance Testing.
   - a. Touch the screen in the [Type] field and select **NTS2 Upper Overspeed**.
   - b. Touch the screen in the [Speed] field and enter the calculated value recorded in the **RECOMMENDED TERMINAL SWITCH CONFIGURATION GUIDE** above for the U/DSL2-H test speed for NTS2.
4. Touch [Next] and then [Top] for the USL2 switch, or [Bottom] for the DSL2 switch.
5. Observe that the car moves toward the opposite terminal landing at the speed entered in step 3b above and then makes an emergency stop when it reaches the NTS2 position value for that terminal landing.
6. Observe that after several seconds, the car corrects to the first floor in a direction away from the terminal landing and shuts down.
7. To restore normal Test operation, press the **FLT RST** button on the SCE-CPU board and touch [Exit] on the screen.

Note

After completing the test in the down direction, if you need to move the car back down to the bottom landing in order to have enough distance in which to achieve the test speed for the up direction, the test will need to be aborted first, and then restarted when the car is at the bottom landing.

8. To test in the opposite direction, repeat steps 1-7.
9. To restore normal Test operation, touch [Exit] on the screen and put the Test switch back to the **NORM** position.

- ETS overspeed
  - Test should be run at UETS/DETS learned speed + UETS/DETS delta speed + 5FPM (CONFIG02 > ETS Switches)
  - Test will be run in TEST mode
- ETSL overspeed
  - Test should be run at ETSL Overspeed +5 FPM (CONFIG 02 > ETS Switches)
  - Test will be run in TEST mode
- NTS1 Lower overspeed
  - Tests the lower overspeed reaction (emergency slowdown then correction speed)
  - Test will be run in TEST mode
  - Test should be run at learned speed of U/DNTS1 + Delta Low Speed + 5 FPM (CONFIG 02 > NTS1 Switches)
- NTS1 Upper overspeed
  - Tests the upper overspeed reaction (emergency stop then correction speed)
  - Test will be run in TEST mode
  - Test should be run at learned speed of U/DNTS1 + Delta High Speed + 5 FPM (CONFIG 02 > NTS1 Switches)
- NTS2 Lower overspeed
  - Tests the lower overspeed reaction (emergency slowdown then correction speed)
  - Test will be run in TEST mode
  - Test should be run at learned speed of U/DNTS2 + Delta Low Speed + 5 FPM (CONFIG 02 > NTS2Switches)
- NTS2 Upper overspeed
  - Tests the upper overspeed reaction (emergency stop then correction speed)
  - Test will be run in TEST mode
  - Test should be run at learned speed of U/DNTS2 + Delta High Speed + 5 FPM (CONFIG 02 > NTS2 Switches)

Passcode (Restricted Mode)

(If applicable.) Until a valid passcode is entered and saved, the controller will not answer hall calls. If a valid passcode has not been obtained and entered for the job:

1. Contact MCE Customer Service to obtain a passcode.
2. In the touch screen CONFIG 01 > JOB INFO AND LABELS, you will see:
   - PASSCODE: PASSCODE ACTIVE
3. Press PASSCODE ACTIVE to open an entry screen.
4. Key in the passcode. Press ENTER.
5. The CONFIG 01 screen will display “PASSCODE VALID.” Press SAVE.
6. The display will change to:
   - PASSCODE: PASSCODE CLEAR
7. The controller will now respond to hall calls.
8. If the screen rejects the passcode entered:
   - Go to **SPA DIAG** screen and select **SPA NUMERIC** tile.
   - Scroll down to addresses **#0080** through **#0083**.
   - Note the data displayed for all four passcode keys in the form of 8 numbers & letters each.
   - Contact MCE Technical Support to receive the correct passcode based on these encrypted keys.

Until the passcode is cleared, a status message: RESTRICTED MODE on the HOME screen will alert you to the need.

Backup the Parameter Settings

Once the controller is running properly and parameter settings have been adjusted for proper operation, copy (backup) the parameter settings to a USB drive:

1. Insert the USB drive in the USB connector on the SCE-CPU board.
2. On the touch screen, navigate to the UTILS screen.
3. Select FILE TRANSFER.
4. Select EXPORT CURRENT SETTINGS TO USB DRIVE. Follow on-screen instructions.

Nidec MCE

Configuration and Troubleshooting

In this Section

This section contains descriptions of Element parameters, web access instructions, and troubleshooting information:

- Using the Touch Screen, page 2-2
- Menu Tree, page 2-4
- Screen Descriptions, page 2-5
- Spare Inputs, page 2-19
- Spare Outputs, page 2-21
- Acronyms, page 2-23
- Web Browser Access, page 2-29
- USB Parameter Transfer, page 2-29
- Event Log Archive/e-mail, page 2-30
- Troubleshooting, page 2-31
- Board Descriptions, page 2-34
- System Software Update, page 2-43.
- Event Descriptions, page 2-52
- Event Log Viewing, page 2-93

Using the Touch Screen/OBD

Element controls use a touchscreen user interface. The initial (and default) display is the Home Display. See “Home Screen” on page 1- 11. Screens are arranged in “order of use” with the Home screen first, followed by configuration screens, utility screens, and then diagnostics oriented screens.

Home

Figure 2.1 Home Display Screen

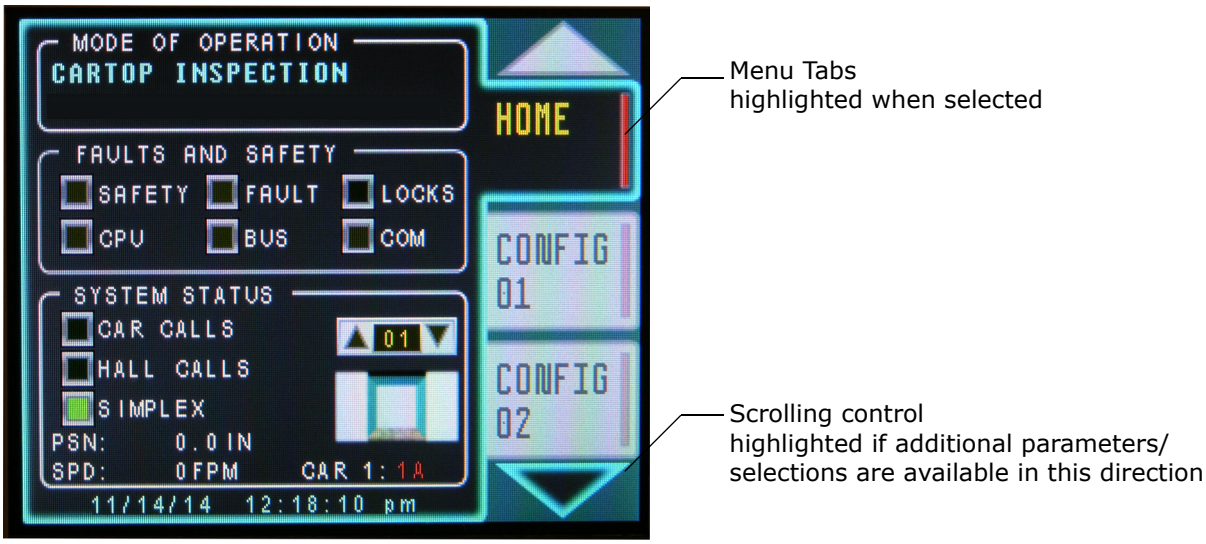

On the Home display screen, “tabs” to the right of the window show what additional adjustment, control, and diagnostic screens are available. Up and Down arrows scroll through the tabs. To access a screen, simply touch the associated tab.

- When activated, main screens with many selections open to a sub-screen selection menu.
- To select/set a particular feature, simply touch it.
  - If Yes/No, it will change from one state to the other.
  - If there are more than two possible settings, a list will appear.
  - If a time or value may be set, a numeric entry screen will open.
- The Save button allows you to save changes. (Save and Exit.)
- The Exit button allows you to exit the screen. Any unsaved changes will be ignored.
- Undo: Undo action but remain in menu.

We recommend you take a few minutes to become familiar with the touch screen interface. You will find operation simple and predictable. See additional screen representations on the next page.

Note

Screen freeze: If the screen should ever freeze or “lock up,” press RSTA on the SCE-CPU board.

Figure 2.2 Parameter Selection Screen

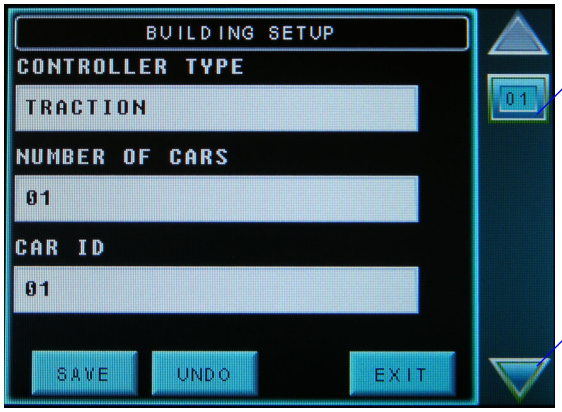

Press and slide to move through multiple screens.

Tap the arrows to move one screen at a time. Press and hold to move continuously.

Figure 2.3 Input/Output Assignment

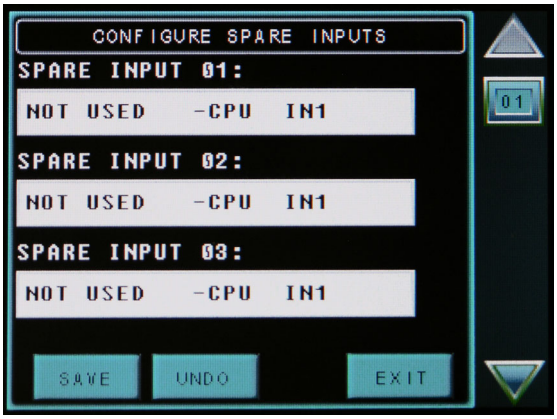

Tap on the input or output to be configured.

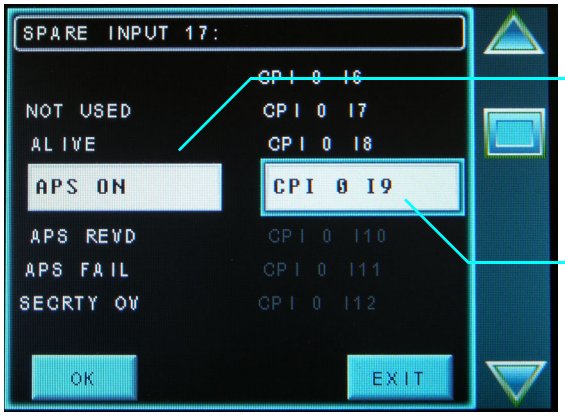

Tap on the input/output name and use scroll arrows or slider to move through potential input/output assignments. Note blue outline when item is selected.

Tap on the input/output location and use scroll arrows or slider to move through potential location assignments. Note blue outline when item is selected.

To reassign an already used input:

- Reassign input to NOT USED, press OK.
- Assign the new function, press OK.
- Press Save.

Figure 2.4 Menu Tree

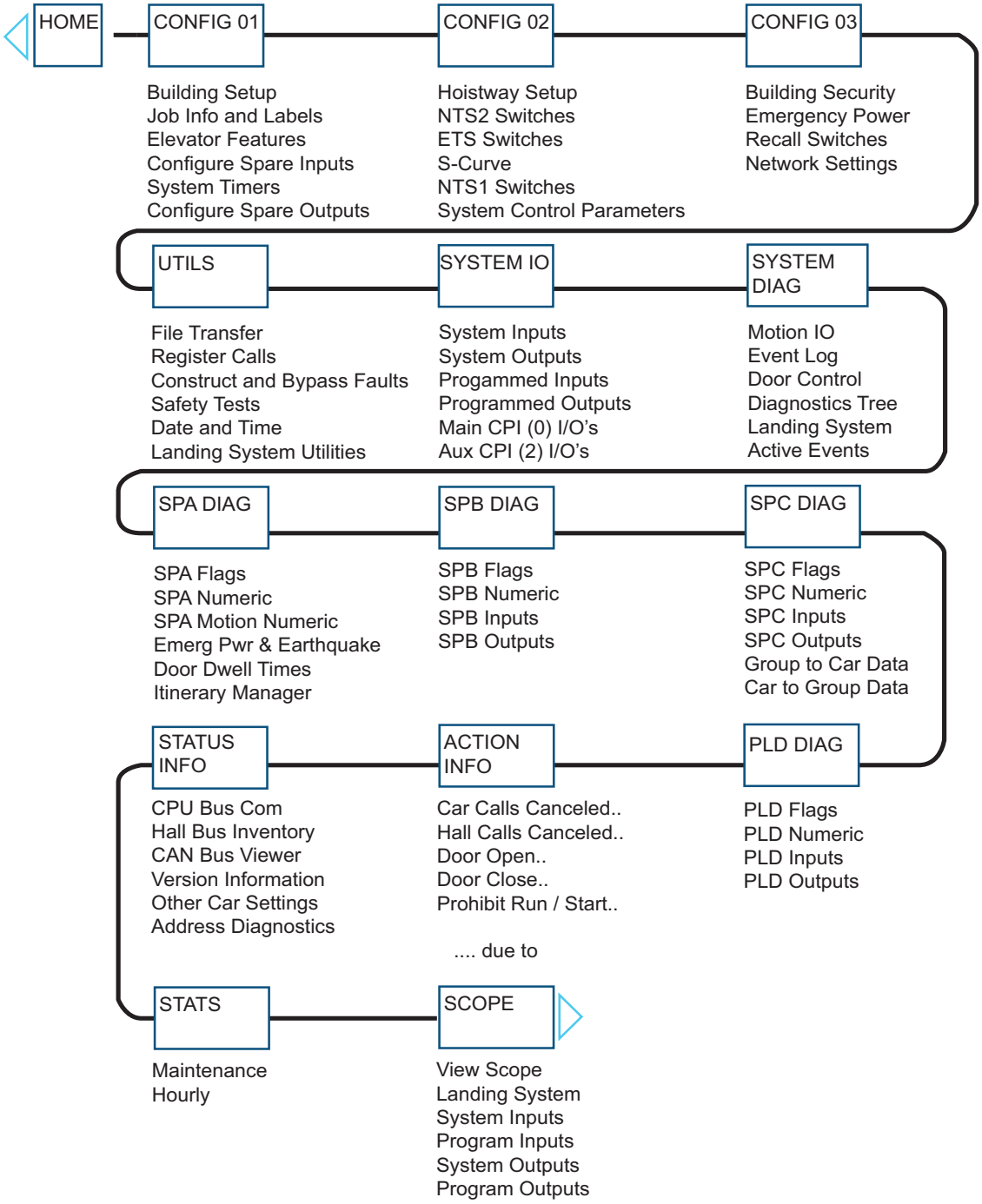

Shortcuts

- Touch the elevator on the Home screen to go to call registration.
- Touch the upper left corner on the Register Calls screen to return to the Home screen.
- Touch inside the Mode of Operation, Faults & Safety, or System Status areas of the Home screen to go to a screen relevant to obtaining additional information.
- Touch the home icon in upper left corner to return to the Home screen.

Screen Descriptions

Experiment with the touchscreen to familiarize yourself with navigation and content. If an abbreviation is not clear, please see Acronym Descriptions and Memory Locations on page 2-23.)

Table 2.1 Touchscreen Organization and Content

Tab	Subtab	Description
HOME	N/A See "Home Screen" on page 1- 11.	Displays critical status information for operation. - Operating Mode - Fault text if a fault is active - Safety string complete indicator - Active fault indicator - Locks string complete indicator - CPU health indicator - Bus status - System communication - Clock and date display - Car and Hall call in service status - Dispatcher (on dispatched car "Disp ID: nn" will appear where "nn" is the ID of the dispatching car, Duplex only) Simplex will appear for single self-dispatching car. - Car door position - Current floor - Intended direction of travel - Destination floor
CONFIG 01	**Building Setup**	- Controller Type, Hydraulic/Traction - Number of Cars (1 Simplex, 2 Duplex) - Car ID - Bottom Floor (served) - Top Floor (served) - Floor Openings (per floor, Front/None) - Lobby Floor - Egress Floor (building exit floor) - Safety Code (Fire Code) (page 1-5) - Flash Fire Hat (MR/HSTWY) - Main Fire Floor - Alt Fire Floor - Flood Floor (lowest served if Flood input active) - Landing System Type, LS-EDGE or LS-RAIL - Primary Parking Floor - Primary Parking Door Operation - Secondary Parking Floor - Secondary Parking Door Operation - Car Panel Inspection: When present (Yes), SCE-CPU inputs ICEN/IN1, ICPU/IN2, and ICPD/IN3 may only be used as Car Panel Inspection inputs. - Hoistway Access: Top, Bottom, or Both. - EMS Floor: Set the floor number at which the EMS call to floor input is located.
	Job Info and Labels	- Passcode. See Passcode (Restricted Mode) on page 1-76. - SCE CPU Serial Number (Read Only) - Job Department and Year - Job Number - Job Name - Car Label - Floor Label, per floor

Table 2.1 Touchscreen Organization and Content

Tab	Subtab	Description
CONFIG 01	**Elevator Features**	- **Capture Floor** (Pretest Operation calls car to this floor). See Capture for Test, page 1-8. - **Capture Door Operation** (Doors Closed/Open Doors/Cycle Doors): Door behavior at capture floor. - **Bypass Stuck PHE** (Yes/No) When enabled, causes controller to ignore PHE (Photo Eye) input and close the doors after the Stuck PHE Timer elapses. - **Bypass Stuck SE** (Yes/No) When enabled, causes controller to ignore SE (Safety Edge) input and close the doors after the Stuck SE timer elapses. - **Bypass Stuck DOB** (Yes/No) When enabled, causes controller to ignore DOB (Door Open Button) input and close doors after the Stuck DOB or TOS timer elapses. - **PHE Antinuisance** (Photo Eye Antinuisance - 00 - 10) Maximum number of car calls served without photo eye interruption before all car calls are canceled. - **LLI Antinuisance** (Light Load Antinuisance - 00 - 10) Maximum number of car calls registered with load light input active. - **CCC Reversal** (Yes/No) If Yes, cancel any car calls in the previous direction when the car reverses direction. - **CCC Behind Car** (Yes/No) If Yes, cancel all car calls entered in the opposite direction of current or upcoming direction of travel. - **Pre-Open Doors** (Yes/No) If Yes, doors will begin opening three inches before floor level. - **Nudging** (Yes/No) If Yes, enables nudging operation when doors are prevented from closing. - **DLK Direction Preference** (Yes/No) If Yes, car maintains present direction preference until doors closed and locked. If No, car maintains direction preference only until door dwell time expires. - **Double Ding Down** (Yes/No) Causes lanterns and gongs to double-strike if car direction preference is down. - **DCB Cancels CCT** (Yes/No) If Yes, pressing the Door Close Button cancels the active car call door timer and begins closing doors immediately. - **DCB Cancels HCT** (Yes/No) If Yes, pressing the Door Close button cancels the active hall call door timer and begins closing doors immediately. - **DCB Cancels LOT** (Yes/No) If Yes, pressing the Door Close button cancels the lobby dwell timer and begins closing the doors immediately. - **PHE Cancels CCT** (Yes/No) If Yes, photo eye activation cancels the active car call dwell timer. - **PHE Cancels HCT** (Yes/No) If Yes, photo eye activation cancels the active hall call dwell timer. - **PHE Cancels LOT** (Yes/No) If Yes, photo eye activation resets the lobby door dwell timer. - **CCB Cancels CCT** (Yes/No) If Yes, pressing a car call button while the doors are open will cancel normal car call door dwell time and cause the doors to begin closing. - **CCB Cancels HCT** (Yes/No) If Yes, pressing a car call button cancels the active hall call dwell timer and begin closing doors immediately. - **CCB Cancels LOT** (Yes/No) If Yes, pressing a car call button will cancel the lobby door dwell timer and begin closing doors immediately.

Table 2.1 Touchscreen Organization and Content

Tab	Subtab	Description
CONFIG 01	**Elevator Features**	- **Stuck Insp Input (TSSA)** (Yes/No): If Yes, and if any inspection direction or enable inputs remain high for more than one second during passenger operation, or during inspection operation, if any combination of inspection inputs remain high for more than five seconds, except for Enable plus Up (e.g., ICEN + ICPU) and Enable plus Down (e.g., ICEN + ICPD), a stuck inspection button fault will be generated. - **Idle Door Open** (Yes/No): If Yes, the car will open its doors when Idle or Parked at a floor. - **Latch Door Open** (Yes/No): If Yes, keeps the Door Open Function (DOF) on when doors are open. - **Latch Door Close** (Yes/No): If Yes, keeps the Door Close Function (DCF) on when doors are closed. - **Door Contact FLT Enabled** (Yes/No): When enabled, the car gate and hoistway door contacts are monitored, when the doors are fully open at a floor, to detect any jumpered contacts that would result in a mismatch or unexpected door signals. When this occurs, a fault is generated, the car is shut down and the door close button rendered inoperative as long as the fault is present (per applicable elevator code). When disabled, the fault is logged but otherwise ignored. - **Earthquake Normal Mode**: None: Car is not allowed to run on earthquake operation. After Delay: Car is allowed to run at reduced speed 10 seconds after reaching a floor, only if the counterweight is not derailed. Fire Only: Car is allowed to run at reduced speed 10 seconds after reaching a floor, only if the counterweight is not derailed and only on fire service. - **CPClose Bypass PHE** (Yes/No): Set to Yes for the photo eye to be bypassed during constant pressure close operation. (This option does not apply to Fire Phase II.) - Resynchronization Days (Sunday through Saturday): Day(s) on which resynchronization is to be performed. Note: Set day of the week (UTILS > DATE AND TIME) - Resynchronization Time (Hour/Minute AM/PM): Time at which resynchronization is to be performed. - **EMERGDISP CYCLES** (Emergency Dispatch Cycles - 01-10) The number of full cycles between emergency dispatch pauses. The default value is 1. -**EMERGDISP HOLD TIMER** (Default 0 seconds) During emergency dispatch operation, the car will pause for this amount of time after completing the number of user defined emergency dispatch cycles. The timer is reset if the car starts to move to park or answer COP car calls.
	Configure Spare Inputs	Allows input signals to be assigned to available spare inputs. Maximum 30. See Spare Inputs on page 2-19.
	Configure Spare Outputs	Allows output signals to be assigned to available spare outputs. Maximum 20. See Spare Outputs on page 2-21.
	Input/Output Assignment 1. Select CONFIG01, Configure Spare Inputs (or Outputs). 2. Touch the unused input you want to configure. An assignment screen will appear. 3. Touch and highlight either the input/output you want to assign or the physical connection you want to assign to. 4. Change selection by scrolling up or down (scroll bar on the right). 5. When desired Inputs/Outputs and desired physical connections are aligned, press OK to return to the configure screen. Press Save to save changes.	

Table 2.1 Touchscreen Organization and Content

Tab	Subtab	Description
CONFIG 01	**System Timers**	- **Motor/Valve Time Limit** (Default 3 minutes) Starts when the controller attempts to move the car in the up direction and resets when the car reaches the destination floor. If the timer expires before the car reaches its destination, the controller stops trying to move the car up to protect the motor. The car will then lower to the bottom floor and shut down. - **Open Limit Time** (Default 10 seconds) Determines how long the door operator should attempt to open the doors before declaring an unsuccessful attempt (Door Open Fail 1 - 3). After 3 unsuccessful attempts, a Door Open Fault will be declared. This action protects the door motor. - **Close Limit Time** (Default 10 seconds) Determines how long the door operator should attempt to close the doors before declaring an unsuccessful attempt (Door Close Fail 1 - 3). After 3 unsuccessful attempts, a Door Close Fault will be generated, followed by a Door Fault Shutdown. This action protects the door motor. - **Door Interlock Timer** (Default 100 mS) Introduces a delay when closing or opening doors are abruptly reversed. This may be required if the door operator is sensitive to such reversal due to de-bounce capability. Set to 0.0 if not required. - **Short Door Timer** (Default 1 second) Length of time doors will remain open after being reopened by photo eye, safety edge, or door open button. - **Car Call Timer** (Default 2 seconds) Length of time doors will remain open to service a car call. - **Hall Call Timer** (Default 4 seconds) Length of time doors will remain open to service a hall call. - **Lobby Call Timer** (Default 6 seconds) Length of time doors will remain open to service a lobby call. - **ADA Car Timer** (Default 3 seconds) Length of time doors will remain open to service an ADA car call. - **ADA Hall Timer** (Default 5 seconds) Length of time doors will remain open to service an ADA hall call. - **Stuck PHE Timer** (Default 10 seconds) Length of time the photo eye is allowed to delay closing before it is bypassed and the doors begin to close. - **Stuck SE Timer** (Default 20 seconds) Length of time the safety edge is allowed to delay closing before it is bypassed and the doors begin to close. - **Stuck DOB Timer** (Default 10 seconds) Length of time the door open button is allowed to delay closing before it is bypassed and the doors begin to close. - **Car Delayed Timer** (Default 30 seconds) Removes the car from hall call demand if delayed beyond the timer setting. - **COS Timer** (Default 5 minutes) If the car delayed condition persists for the amount of time set here, the car will be removed from service for all calls. - **FLO Timer** (Default 5 minutes) When a car is inactive for this amount of time, the fan and light will automatically be turned off. - **Door Hold Timer** (Default 20 seconds) Time to hold the doors open for a momentary activation of the Door Hold input (button). - **Parking Timer** (Default 2 seconds) If a car is idle in excess of the time set here, it will move to its designated parking floor. - **Sleep Mode Timer** (Default 10 minutes) The touch screen will enter sleep mode when this timer expires if there has been no activity.

Table 2.1 Touchscreen Organization and Content

Tab	Subtab	Description
CONFIG 02	**Hoistway Setup**	Floor heights are set during hoistway learn operation but may be adjusted here to compensate for floor level magnet position imperfections. - **Floor Height** (n): Level at floor height in inches for each landing. - **Floor Offset** (n): "Moves" the floor up or down (negative entries) to adjust the elevator level position. - **Counterweight Position**: Distance in inches from the bottom of the hoistway at which the counterweight and car are directly adjacent. Traction only. - **Landing System ID**: Automatically entered during hoistway learn operation. Forces a new learn if the landing system software or hardware is changed. - **Top Access Distance:** Sets the location of the "top access switch" that limits downward travel to a point at which the cross-head is level with the sill when accessing the car top. - **Bottom Access Distance**: Sets the location of the "bottom access switch" that limits upward travel to a point at which the bottom of the apron is even with the hoistway entrance header. - **Top/Bottom Access Margin**: Default (36") Expands the top and bottom access distance to compensate for a car that skids past the top or bottom access limit switches. - **U/DTL Limit Option**: Select whether UTL and DTL switches are physical or virtual (in software). - **U/DTL Distance**: If these switches are virtual, this sets the distance beyond terminal floor level at which the switch is positioned.
	NTS2 Switches	- **U/DSL2 Option**: Select whether these switches are physical or virtual (in software). - **USL2 Speed**: Learned/programmed speed at or below which the car must be traveling when this switch is encountered to use normal slowdown means. - **USL2 Delta-L Speed**: Provides an adder to USL2 Speed. If the car is traveling at or above the sum of Delta-L and USL2 speed, an emergency slowdown is used to bring the car into the terminal. - **USL2 Delta-H Speed**: Provides an adder to USL2 Speed. If the car is traveling at or above the sum of Delta-H and USL2 speed, the car will perform an emergency stop then proceed at correction speed to the terminal. - **USL2 Distance**: Learned/programmed distance at which the virtual USL2 switch is positioned from terminal floor level. - **USL2 Delta Distance**: Sets a distance on both sides of the switch within which the switch must be detected to avoid an emergency stop. - **DSL2 Speed**: Learned/programmed speed at or below which the car must be traveling when this switch is encountered to use normal slowdown means. - **DSL2 Delta-L Speed**: Provides an adder to DSL2 Speed. If the car is traveling at or above the sum of Delta-L and DSL2 speed, an emergency slowdown is used to bring the car into the terminal. - **DSL2 Delta-H Speed**: Provides an adder to DSL2 Speed. If the car is traveling at or above the sum of Delta-H and DSL2 speed, the car will perform an emergency stop then proceed at correction speed to the terminal. - **DSL2 Distance**: Learned/programmed distance at which the virtual DSL2 switch is positioned from terminal floor level. - **DSL2 Delta Distance**: Sets a distance on both sides of the switch within which the switch must be detected to avoid an emergency stop.

Table 2.1 Touchscreen Organization and Content

Tab	Subtab	Description
	ETS Switches	- **U/DETS-LS Option**: Select whether these switches are used on this job. - **U/DETS-LS Overspeed**: This is the speed, in feet per minute, which the car must be below when opening the Emergency Terminal LS Switch. - **U/DETS Option**: Select whether these switches are physical or virtual (in software). - **UETS Speed**: This is the speed, in feet per minute, which the car must be below when opening the Up Emergency Terminal Switch. This value, plus the value of the UETS Delta Speed settings, must not exceed 95% of Contract Speed. - **UETS Delta Speed**: Delta Speed provides an "adder" to UETS speed. UETS speed and Delta speed together may not exceed 95% of contract speed. Initially, calculate the Delta as 95% of Contract Speed - Learned Speed @ switch = Delta value. - **UETS Distance**: Distance in inches from the top terminal floor level position at which the UETS switch is positioned. Learned value. - **UETS Delta Distance**: Distance in inches on either side of the UETS position inside which the car must detect the switch. If the switch is not detected within this span, the car will perform an emergency stop. Generally set to 6.0 inches. - **DETS Speed**: This is the speed, in feet per minute, which the car must be below when opening the Down Emergency Terminal Switch. This value, plus the value of the DETS Delta Speed settings, must not exceed 95% of Contract Speed. - **DETS Delta Speed**: Delta Speed provides an "adder" to DETS speed. DETS speed and Delta speed together may not exceed 95% of contract speed. Initially, calculate the Delta as 95% of Contract Speed - Learned Speed @ switch = Delta value. - **DETS Distance**: Distance in inches from the bottom terminal floor level position at which the DETS switch is positioned. Learned value. - **DETS Delta Distance**: Distance in inches on either side of the DETS position inside which the car must detect the switch. If the switch is not detected within this span, the car will perform an emergency stop. Generally set to 6.0 inches.

Table 2.1 Touchscreen Organization and Content

Tab	Subtab	Description
	S-Curve	
		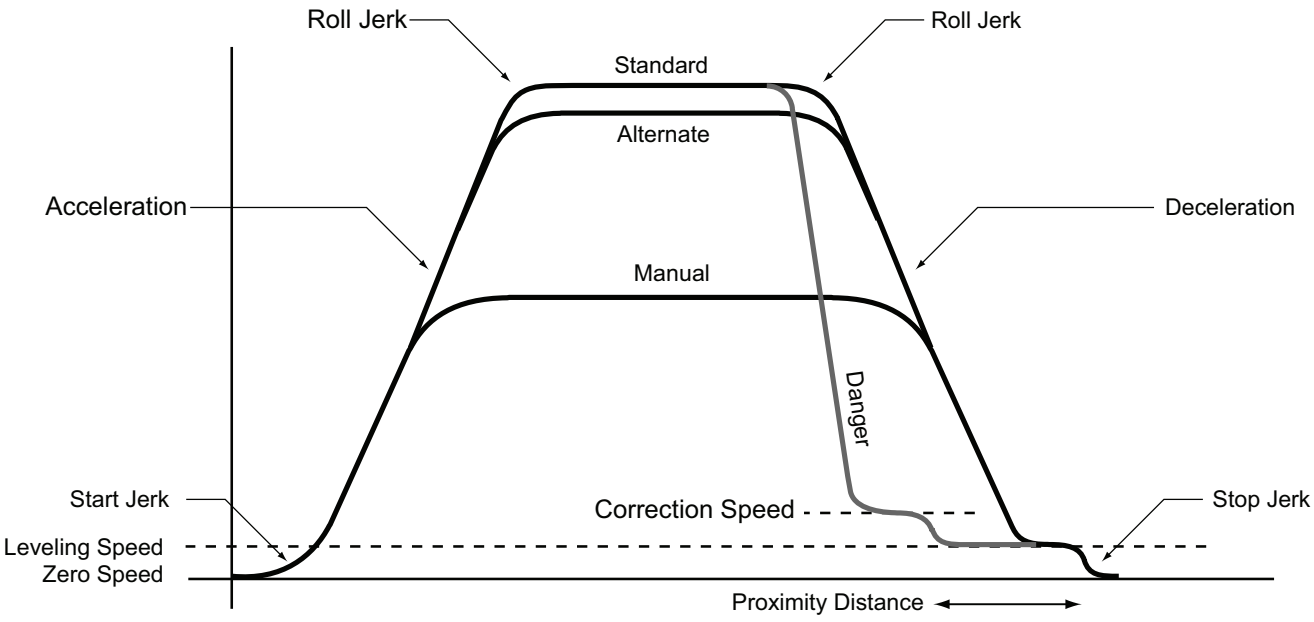
CONFIG 02	**S-Curve**	- **Standard Start Jerk**: Defines the transition from zero speed to full acceleration. As this value increases, the profile transitions more quickly from starting to maximum acceleration. Values typically range from 4.0 to 8.0. - **Standard Roll Jerk**: Determines how quickly the profile transitions from maximum to zero acceleration and zero to maximum deceleration. As Roll Jerk increases, the profile transitions more quickly. Lower values provide greater comfort but are harder to fit into the shortest one-floor-runs. We recommend you identify the shortest full height floor and use it when testing parameter values. Typical values range upwards from a minimum of 4.0. - **Standard Stop Jerk**: Defines the transition from deceleration to Leveling Speed. As stop jerk increases the profile transitions more quickly from deceleration to leveling speed. - **Standard Acceleration**: Determines the maximum acceleration for the profile and the maximum current delivered by the drive during acceleration. Maximum value is typically 4.0; minimum is usually not less than 2.5. Higher values than 4.0 are possible but do not yield significant improvements in performance. - **Standard Deceleration**: Determines the maximum deceleration for this profile. The maximum value is typically 4.0 and the minimum is usually not less than 2.0 with common values raging from 2.75 to 3.75. The value of deceleration is usually slightly less than the value of acceleration. - **Alternate Start Jerk**: Defines the transition from zero speed to full acceleration. As this value increases, the profile transitions more quickly from starting to maximum acceleration. Values typically range from 4.0 to 8.0. - **Alternate Roll Jerk**: Determines how quickly the profile transitions from maximum to zero acceleration and zero to maximum deceleration. As Roll Jerk increases, the profile transitions more quickly. Lower values provide greater comfort but are harder to fit into the shortest one-floor-runs. We recommend you identify the shortest full height floor and use it when testing parameter values. Typical values range upwards from a minimum of 4.0.

Table 2.1 Touchscreen Organization and Content

Tab	Subtab	Description
CONFIG 02	**S-Curve**	- **Alternate Stop Jerk**: Defines the transition from deceleration to Leveling Speed. As stop jerk increases the profile transitions more quickly. - **Alternate Acceleration**: Determines the maximum acceleration for the profile and the maximum current delivered by the drive during acceleration. Maximum value is typically 4.0; minimum is usually not less than 2.5. Higher values than 4.0 are possible but do not yield significant improvements in performance. - **Alternate Deceleration:** Determines the maximum deceleration for this profile. The maximum value is typically 4.0 and the minimum is usually not less than 2.0 with common values raging from 2.75 to 3.75. The value of deceleration is usually slightly less than the value of acceleration. - **Danger Start Jerk**: Danger profile is used for emergency slowdown. If, after stopping, the car restarts while remaining on the danger profile, this defines the transition from zero speed to full acceleration. - **Danger Roll Jerk**: Determines how quickly the profile transitions from maximum to zero acceleration and zero to maximum deceleration. - **Danger Stop Jerk**: Defines the transition from deceleration to stop. - **Danger Deceleration**: Determines maximum deceleration for this profile. - **Manual Start Jerk**: Defines the transition from zero speed to full acceleration on manual movement, including inspection operation. - **Manual Roll Jerk**: Determines how quickly the profile transitions from maximum to zero acceleration and zero to maximum deceleration. - **Manual Stop Jerk:** Defines the transition from deceleration to Stop. - **Manual Acceleration**: Determines maximum acceleration for the profile. - **Manual Deceleration**: Determines maximum deceleration for the profile.
	NTS1 Switches	- **U/DSL1 Option**: Selects if a physical or virtual (software) switch is used. - **USL1 Speed**: Speed at which the car should be traveling when encountering this switch during a normal run to the terminal in order for normal stopping means to properly slow and stop the car. - **USL1 Delta-L Speed**: Provides an "adder" to the USL1 Speed setting. If the car is traveling at or below the sum of USL1 and Delta-L Speed, normal slowing and stopping means are used. - **USL1 Delta-H Speed:** Provides an "adder" to the USL1 Speed setting. If the car is traveling at or above the sum of USL1 and Delta-H Speed, an emergency slowdown is initiated. - **USL1 Distance**: The distance from the top terminal floor level position at which this switch is located. - **USL1 Delta Distance**: Distance in inches on either side of the USL1 switch inside which the car must detect the switch. If the switch is not detected within this span, the car will drop high speed. Generally 6.0 inches. - **DSL1 Speed**: Speed at which the car should be traveling when encountering this switch during a normal run to the terminal in order for normal stopping means to properly slow and stop the car. - **DSL1 Delta-L Speed**: Provides an "adder" to the DSL1 Speed setting. If the car is traveling at or below the sum of DSL1 and Delta-L Speed, normal slowing and stopping means are used. - **DSL1 Delta-H Speed**: Provides an "adder" to the DSL1 Speed setting. If the car is traveling at or above the sum of DSL1 and Delta-H Speed, an emergency slowdown is initiated. - **DSL1 Distance**: The distance from the bottom terminal floor level position at which this switch is located. - **DSL1 Delta Distance**: Distance in inches on either side of the DSL1 switch inside which the car must detect the switch. If the switch is not detected within this span, the car will drop high speed. Generally 6.0 inches.

Table 2.1 Touchscreen Organization and Content

Tab	Subtab	Description
CONFIG 02	**System Control Parameters**	**(Also see S-Curve on page 2-11)** - **Primary Dispatcher**: If this is the primary dispatcher of a duplex pair or a standalone Simplex, set to Yes. If this is the local (non dispatcher) of a Duplex, set to No. - **Profile Advance**: Advances application of the curve but with no speed command issued. - **Profile Scale**: Scales the curve to affect all associated speed settings, i.e., 50% of standard pattern would reduce contract and other associated speeds to 50% of their value. - **Hoistmotor Speed**: Setting in drive sheave RPM at which the car achieves contract speed. - **Contract Overspeed**: Feet per minute above contract speed at which a contract overspeed is detected. - **Inspect Overspeed**: Feet per minute above inspection speed at which an overspeed is detected and an emergency stop initiated. - **Level Overspeed**: Feet per minute above leveling speed at which a leveling overspeed is detected and an emergency stop initiated. - **Contract Speed**: Car rated speed in feet per minute. - **High Speed**: Maximum car speed in feet per minute. Normally the same as Contract Speed. Traction only. - **Backup Speed**: Feet per minute at which the car should run on emergency generator power. - **Earthquake Speed**: Feet per minute at which the car should operate if code allows movement during earthquake operation. - **Correct Speed**: Feet per minute at which the car will run when moving to a floor or terminal to correct position. - **Inspection Speed (Fast)**: Feet per minute at which the car should run on Inspection operation. - **Inspection Speed (Slow)**: Reduced inspection speed upon encountering an NTS1 switch. - **Level Speed**: Speed car should transition to when leveling into a landing. - **Level Distance**: Distance from the landing at which the car should transition to leveling speed. - **Relevel Distance**: Distance from landing within which car should relevel. - **Level Dead Zone Distance**: Distance from floor level position at which the stop command is issued during initial leveling and the car "coasts" to a stop. Level Distance must be greater than Level Dead Zone Distance. - **Relevel Dead Zone Distance**: Distance from floor level position at which the stop command is issued. Used when car is releveling. Relevel Distance must be greater than Relevel Dead Zone Distance. - **Proximity Distance**: Distance at which speed is transitioned to leveling speed under abnormal conditions like an emergency slowdown. - **Following Error**: Sets the allowed margin of deviation from commanded speed before a fault is declared. Expressed as a percentage of that speed. - **Auto Norm Slew Rate**: Smooths speed transitions for modes other than inspection. Reduce for smoother transitions. - **Auto Emerg Slew Rate**: Determines how aggressively the car can decelerate under abnormal conditions like an emergency slowdown. Reduce for smoother transitions. - **Inspect Slew Rate**: (Ft/Sec2): Determines how aggressively the car can decelerate during Inspection mode. - **Auto Slew Filter** (Hz): Smooths any harsh transitions in the commanded speed for modes other than Inspection. Reducing this value causes a smoother transition.

Table 2.1 Touchscreen Organization and Content

Tab	Subtab	Description
CONFIG 02	**System Control Parameters**	- **Inspect Slew Filter** (Hz): Smooths any harsh transitions in the commanded speed for Inspection mode. - **Drive Type**: Select drive type in use. - **Emergency Brake Type**: Select emergency brake in use. - **Unintended Motion**: Floor Zone or Door Zone. Floor Zone = The car has drifted more than six inches from the landing with car and hall doors open. Door Zone = The car has drifted more than three inches from the door zone with car and hall doors open. -**Brake Drop Delay**: Time in milliseconds that the brake should be delayed from dropping after the speed command is dropped. Goal is to avoid dropping the brake on a moving motor. - **Speed Pick Delay**: Time in milliseconds after the brake is energized before the speed command is issued. Used to prevent beginning movement under a slow picking brake. - **Speed Drop Delay**: Time in milliseconds during which the drive should continue to exert motor control after the direction command is removed (car has reached floor but brake has not yet dropped). Used for drives that do not independently provide a parameter to extend this period of control. - **Drive Disable Delay**: Time in milliseconds after stopping at a floor which the drive should maintain electrical control of the motor. May be used to compensate for a slow dropping brake.
CONFIG 03	**Building Security**	- **Security Enabled** (Yes/No): Security on or off? - **CC Enable Active Off** (Yes/No): Is car call enable signal active in off/low or on/high state? - **Enable DOB on Security** (Yes/No): Door open button functional if car is stopped at a secured floor? - **Ind Overrides Security** (Yes/No): Is security enforced on Independent mode? - **Remote Calls Override Sec** (Yes/No): Do remotely placed calls (through touch screen, iMonitor, etc.) override security settings? - **Park at Secured Floor** (Yes/No): Shall the car be allowed to park at a secured floor?
	Emergency Power	- **Emergency Power Type**: None: No emergency power available. - Dispatcher: Emergency recall and run determined by dispatcher. - Overlay: Emergency recall and run determined through discrete I/O by emergency power overlay system. - **Cars to Run on EP**: Number of cars able to run on emergency power Phase 2 (Run phase). - **Pref Car to Run on EP2**: Preferred car to run on emergency power after recall. - **Bypass EP Sequencing**: When set to Yes, emergency power recall and select to run phases are bypassed and the maximum number of cars are selected to run on generator power without the need of an EP selection switch. - **EP Recall Floor**: Floor to which cars will recall on emergency power. - **EP Recall Timeout**: Number of seconds the dispatcher should attempt to recall a non responsive car before passing it by. - **EP Door Operation**: Open Doors: Doors open at recall floor. Default. Cycle Doors: Door will cycle open and then close at recall floor.

Table 2.1 Touchscreen Organization and Content

Tab	Subtab	Description
CONFIG 03	**Recall Switches**	Element provides four car recall inputs, Recall S1 - S4. - **Latch Switch** (Seconds): At the recall floor, the car will wait for this period of time for an initiating action to be taken (i.e., independent control initiated, access operation initiated, etc.) before automatically returning to normal passenger service. - **Recall Floor**: Set to desired recall floor. - **Override Security** (Yes/No): If Yes, the recall operation will override security settings for the floor. - **Car Calls Disposition**: How should registered car calls be handled before the car recalls? (Cancel Calls/Answer Calls/Allow New Calls/Cancel Calls at Next Stop) - **Door Operation** (Cycle Doors/Doors Closed/Doors Open): Determines door action upon arrival at the recall floor. - **Override Independent** (Yes/No): If Yes, recall operation will override Independent service.
	Network Settings	- **IP Address**: IP address of car on LAN. - **Subnet Mask**: Subnet mask of car on LAN. - **Default Gateway**: Default gateway of car on LAN. - **MAC Address**
UTILS	**File Transfer Menu**	Allows parameters to be restored: - **Backup Current Settings (to SD)** - **Restore Backup Settings (from SD)** - **Restore Factory Settings (from SD)** When an option is selected, you are prompted to press OK to continue or EXIT to abort without changing defaults. Allows parameters to be transferred: **- Export Events to USB Drive** - **Export Current Settings to USB Drive** - **Import & Apply Settings from USB Drive**
	Register Calls	On-board Car and Hall call registration controls.
	Construct and Bypass Faults	- **Construction/Fault Bypass**: When active, enables Construction operation, bypasses faults. Also requires that the Fault Bypass jumper on the SCE-CPU board be set to BYPASS and the car be placed on Inspection mode. - **Inspection Fault Bypass**: When active, bypasses faults on Inspection operation. Also requires that the Fault Bypass jumper on the SCE-CPU board be set to BYPASS. - **Automatic Fault Bypass**: Bypasses faults on Passenger operation. Also requires that the Fault Bypass jumper on the SCE-CPU board be set to BYPASS. A countdown timer will appear on the Home screen, counting down from 2 hours. When the timer expires, the car will automatically exit fault bypass operation. If more time is required, must be re-enabled.
	Safety Tests	Commissioning test assistance, Automated Tests on page 1-67.
	Date and Time	Date, time and day of the week setting controls.
	Landing System Utilities	- **Hoistway Learn** (Landing System Learn) - Allows you to learn the hoistway, page 1-55. - **Landing System View** - Displays position and speed information at upper and lower leveling markers during floor leveling. Displays on/off status for SDU (Step Down Up), ULM (Up Level Marker), DZ (Door Zone), DLM (Down Level Marker), SDD (Step Down Down). - **Terminal Switch Learn**: Hoistway switch position, speed, and delta learn operation, page 1-60

Table 2.1 Touchscreen Organization and Content

Tab	Subtab	Description
SYSTEM IO	**System Inputs**	On/Off status of dedicated inputs.
	System Outputs	On/Off status of dedicated outputs.
	Programmed Inputs	On/Off status of programmable inputs.
	Programmed Outputs	On/Off status of programmable outputs.
	Main CPI I/Os	On/Off status of CPI inputs/outputs
	Aux CPI I/Os	On/Off status of CPI inputs/outputs
SYSTEM DIAG	**Motion I/O**	Groups indicators for the inputs and outputs active during car motion.
	Event Log	First In, First Out record of the last 200 events, time and date stamped. Colors: Blue = informational; Yellow = fault; Red = Error; Gray = No longer active.
	Door Control	On/Off status of door control inputs/outputs.
	Diagnostics Tree	Indicators for selected PLD functions. See page 2-32
	Landing System	On/Off status of landing system inputs/outputs.
	Active Events	Displays currently active system faults.
SPA DIAG	**SPA Flags**	Indicators for car operation activity.
	SPA Numeric	Data register information for factory assisted diagnosis.
	SPA Motion Numeric	Data register information for factory assisted diagnosis.
	Emergency Pwr & EQ	Indicators related to emergency power and earthquake operation.
	Door Dwell Times	Indicators for active dwell timers.
	Itinerary Manager	Indicators for active car operation signals.
SPB DIAG	**SPB Flags**	Indicators for motion activity.
	SPB Numeric	Data register information for factory assisted diagnosis.
	SPB Inputs	Indicators for motion related inputs
	SPB Outputs	Indicators for motion related outputs.
SPC DIAG	**SPC Flags**	Indicators for USB, Ethernet, and SD card activity.
	SPC Numeric	Data register information for factory assisted diagnosis.
	SPC Inputs	Indicators for communications related inputs.
	SPC Outputs	Indicators for communications related outputs.
	Group to Car Data	Group to car data monitoring
	Car to Group Data	Car to group data monitoring

Table 2.1 Touchscreen Organization and Content

Tab	Subtab	Description
PLD DIAG	**PLD Flags**	Indicators for PLD related I/O.
	PLD Numeric	Data register info for PLD.
	PLD Inputs	Indicators for PLD related inputs.
	PLD Outputs	Indicators for PLD related outputs.
ACTION INFO	**Car Call Canceled Due To**	Conditions affecting car call cancellation and their status.
	Hall Call Canceled Due To	Conditions affecting hall call cancellation and their status.
	Door Open Due To	Conditions affecting door opening and their status.
	Door Close Due To	Conditions affecting door closing and their status.
	Prohibit Run/ Start Due To	Conditions affecting car running and their status.
STATUS INFO	**CPU Bus Com Status**	Conditions affecting processor communication and their status.
	Hall Bus Inventory	With all hall calls installed and working, press INVTRY to inventory switches and indicators. After Inventory is run, press TEST to test for switch or indicator problems.
	CAN Bus Viewer	Allows viewing CAN bus data for SCE-CPU board. Each string provides the ID of the device and eight packets of Hex data bytes. This tool is intended to be used in conjunction with MCE technical support.
	Version Information	Software version information.
	Other Car Settings (display only)	- **Emergency Power Type 2**: As selected. - **Car 2 Floor 'nn' Opening**: Front/Rear/None per floor served by non-dispatching car of Duplex. - **Car 2 Floor Heights**: Height in inches per floor served by non-dispatching car of Duplex. Used by the Dispatching car to calculate ETA when making decisions.
	Address Diagnostics	- Allows you to request selected processor register data via address entry. Technician assisted troubleshooting.
STATS	**Maintenance Statistics**	Power cycles, Resets, Starts, etc.
	Hourly Statistics	Last 24 hours, per hour statistics for car calls, hall calls, up runs, down runs.

Table 2.1 Touchscreen Organization and Content

Tab	Subtab	Description
SCOPE	**View Scope**	Near real time scope with four trace capacity.
	Select From Landing System	Select trace signals from landing system.
	Select From System Inputs	Select trace signals from among dedicated inputs.
	Select From Programmed Inputs	Select trace signals from among programmable inputs.
	Select From System Outputs	Select trace signals from among dedicated outputs.
	Select From Programmed Outputs	Select trace signals from among programmable outputs.

Table 2.2 Spare Inputs

Input	Description
NOT USED	This input is not currently assigned.
ALIVE	Input used in Duplex operation to inform the car that the other car is powered
APS FAIL	Auxiliary power supply failure (TAPS or HAPS)
APS ON	This signal means auxiliary power is active. Auxiliary power supply (HAPS and TAPS)
APS REVD	Detected that reversing direction is appropriate. Auxiliary power supply reverse direction (TAPS)
BRAKE SW	Brake switch. Must be assigned to an input terminal before physical brake verification is performed.
CC ENBL1-16	Car Call Enable Inputs from security system
DBRTF	(ID 86) **Dynamic Brake Resistor Temperature Fault Input.** Momentary activation of this input causes the car to cancel all calls and demands, and stop at the next available floor. Once at a floor or if already at a floor, doors shall cycle. The car remains shut down until the fault is reset by activating the machine room switch and pressing the fault reset button for five seconds.
DCB	Activate this input to close doors. Door close button
DCL	This limit switch opens when doors reach closed position. Door close limit
DLM	Down level marker
DOB	Activate this input to open the doors. Door open button
DOL	This limit switch opens when the doors are fully open. Door open limit
DOOR HOLD	Activate this input to hold the doors open. Door hold button or switch
DPM	Code mandated limit switch that tells us doors are truly closed. Door position monitor
EMDISP	Sometimes referred to as Wild Operation and takes over in the event of dispatcher failure. Emergency dispatch
EMDISP OV	Input that bypasses Wild Operation, when active, car will stay at last call entered in the event of dispatcher failure. Emergency dispatch override
EMSC SW	In Car Emergency Service input that transfers car to Phase 2 of emergency service. Emergency Medical Service in-car fixture input
EMSH SW	Hallway Key switch that activates Phase 1 of emergency service. Emergency Medical Service hall fixture input
EPI	A normally a closed contact that opens to alert controller to presence of Emergency Power. Emergency power input (EPI)
EPI C	A normally an open contact that closes to alert controller to presence of Emergency Power. Emergency power input, active low
EP AUTO	When input is active, car to run on Emergency Power is automatically selected. Emergency power auto select input
EP MANUAL	Use this input to manually select car to run on Emergency Power operation. Emergency power manual select input
EQ CWT	Earthquake counterweight derail
EQ HSCAN	Earthquake Hoistway Scan. A switch is located inside the elevator cab to initiate hoistway scan (required for A17.1-2016 and later code Tractions). When actuated after earthquake shut down, the car will wait 15 seconds, then close doors, run at slow speed (not to exceed 150ft/min) to the top terminal, then to the bottom terminal, then return to the floor where the scan was initiated, where it is shut down with doors open.
EQ SLOW SP	Earthquake Slow Speed. A switch is located inside the elevator cab. When actuated, the car is returned to normal service but will run at slow speed (not to exceed 150ft/min). This input is ignored for jobs with A17.1-2016 code and later.

Table 2.2 Spare Inputs

Input	Description
EQ SS	Input from **Shaker Box** that tells controller than an earthquake has occurred. Earthquake seismic sensor
FR1 OFF	When in OFF position, system looks to smokes to determine status of Fire Service.
FR1 ON	When in ON position, system is on fire recall to main egress floor.
FR1 ON2	When in ON position, system is on fire recall to main egress floor, however both switches must be off to reset fire service. ON position of the additional fire recall switch
FR1 RESET	Used to reset or bypass Fire Service Phase 1. RESET position of the primary fire recall switch
FR2 CANCEL	When on Phase 2 Fire, used to cancel any existing car calls. Firefighter CALL CANCEL switch
FR2 HOLD	Used to hold the doors open when on Phase 2 Fire Service. HOLD position of firefighter in car switch
FR2 OFF	When turned to OFF position, car returns to main egress floor and reverts to Phase 1 Fire Service. OFF position of firefighter in car switch
FR2 ON	Places car on Phase 2 Fire Service. ON position of firefighter in car switch
FRSA OTHER	When OFF (active low) car returns to alternate recall level on Phase 1 Fire and flashes fire hat. Other cars ALT recall input (from MR or Hoistway)
FRSM OTHER	When this input goes low, car returns to main egress floor on Phase 1 fire. Other cars MAIN recall input (from MR or Hoistway)
HC CANCEL	When active, cancels any remaining hall calls. Hall Call cancel
IND SERV	When active, places car on Independent Service. Independent service
LOAD DISP	Load Weigher input that shortens door dwell time when activated (full car). Dispatch load
LOAD HEAVY	When active, causes car to bypass hall call until load in car decreases. Heavy load
LOAD LIGHT	Used for anti-nuisance. If not activated only programmed number of car calls can be latched. Placing more than this number will cancel all car calls. Light load
LOAD OVER	When active, doors will be held open until load diminishes. Bypassed by FRS. Overload
LOAD OVER2	When active, doors will be held open until load diminished. Not bypassed by FRS. Overload 2 (for over 125% full load only)
PFG ENABL	When assigned, passing floor chime will only sound when this button is pressed. Passing floor gong enable button
PHE	Optical reopening means for door connects here. When active, causes doors to reopen. Photo eye
PHE C	Optical reopening means for door connects here. When low, causes doors to reopen. Photo eye, active low
PHE CUT	When active disables photo eye input. Photo eye cutout
PIT FLOOD	When active, prevents car from servicing floors below programmed flood level. Flood level switch
PTI	When active, causes car to stop at nearest floor and cycle doors. Car is then taken out of service. Power transfer input
PTI C	When low, causes car to stop at nearest floor and cycle doors. Car is then taken out of service. Power transfer input, active low
R2	Used for absolute floor encoding on LS-STAN and LS-QUTE. Floor encoding input.
RECALL S1	When active, recalls car to programmed floor. See CONFIG 03 Recall Switches
RECALL S2	When active, recalls car to programmed floor. See CONFIG 03 Recall Switches
RECALL S3	When active, recalls car to programmed floor. See CONFIG 03 Recall Switches
RECALL S4	When active, recalls car to programmed floor. See CONFIG 03 Recall Switches
SAFE EDGE	When active, reopens doors. Door safe edge

Table 2.2 Spare Inputs

Input	Description
SAF EDGE C	When low, opens doors. Door safe edge, active low.
SECRTY OV	When active, bypasses security. Security override.
SMI	Input fed by a switch that tells us that we have lost traction. Suspension Means Integrity. Traction only.
SMM	(Suspension Members Monitor) The input acts like the SMI input (Suspension Means Integrity). It is retained upon power cycle and latched until the IMP fault reset button is pressed. Suspension Means Monitoring. The detection means are of the manually reset type used to detect that the elevator has lost traction or there is a problem with the suspension members. Once the fault is detected, the car shall stop at the next available floor and shutdown. This fault is saved over a computer reset.
STD	Slow down vane or magnet for down direction of travel. Also used for floor encoding. Step Down
STU	Slow down vane or magnet for up direction of travel. Also used for floor encoding. Step Up
ULM	Used to locate floor for pre-opening and for final approach. Inner leveling zone is set by ULM and DZ. Up level marker

Table 2.3 Spare Outputs

Output	Description
NOT USED	This output is not currently assigned.
APS DONE	TAPS asserts this output when return is complete. Auxiliary power supply recall complete
ARROW DN	Turns ON when preferred direction of travel is below car's present location. Down direction preference arrow
ARROW UP	Turns ON when preferred direction of travel is above car's present location. Up direction preference arrow
BACKUP PWR	Battery lowering has been activated by the APS ON input (HAPS/TAPS)
CAR DELAY	Car has not been able to move, Typically due to doors being held open. Car delayed
CC REGSTRD	Car call registered. Activates for 1/2 second when a car call is registered.
CC SECURED	Activates for 1/2 second if a secured car call button is pressed.
CAR GONG	Car gongs
CAR LANTDN	Down car lanterns
CAR LANTUP	Up car lanterns
CLOSING	The doors are closing or attempting to close. See output DCF
DCF	Activates to close the doors. Turns off after door lock is established. Door close function
DHOLD END	Door hold function ending warning buzzer
DHOLD ON	Door hold function active
DOF	Turns ON to open the doors. Turns off after DOL opens. Door open function
EF GONG	Egress floor arrival gong
EMSC BUZZR	Emergency Medical Service car buzzer output
EMSC LIGHT	Emergency Medical Service car light output
EMSH LIGHT	Emergency Medical Service hall light output
EP CARDONE	Emergency power recall done output
EP LIGHT	Emergency power light. Flashes when car is selected to run on emergency power. Solid when car is selected to recall.

Table 2.3 Spare Outputs

Output	Description
EP LOBBY	Intended to drive a light at the designated emergency power return floor after the car is at the floor with doors open on emergency power.
EP ON	Emergency power ON output
EP2 ON	Emergency Power Phase 2 run output active
EP SELECT	Emergency power car selected to recall or run output
EP1 ON	Emergency power lowering phase output
EP1 RECALL	Emergency power car selected to recall output
EP2 ON	Emergency power running phase output
EP2 RUN	Emergency power car selected to run output
EQ BUZZER	Turns ON after an earthquake has been detected. Earthquake buzzer
EQ LIGHT	Turns ON after an earthquake has been detected. Earthquake light
EQ MODE	Used for A17.1-2016 EQ and later. This input is solid ON or Flashes depending on the current phase of the earthquake operation, as required by code.
EQ SLOW	EQ SLOW: Used for A17.1-2016 EQ. This input is solid ON or Flashes depending on the current phase of the earthquake operation, as required by code.
FAN LIGHT	Controlled by FLO Timer (Default 5 minutes) located in System Timers. Fan/light output
FLR GONG	Output activates when car passes a floor
FR HAT	Illuminates when we are on Fire Phase 1. Fire I hat light
FR ISV	In service for fire service light
FR RECALL	Fire recall light
FR1 BUZR	Fire I buzzer
FR1 DONE	Fire recall complete
FR1 LIGHT	Fire phase one in effect light
FR1 SYSTEM	Added a new FR1 SYSTEM spare output that acts just like the FR1 LIGHT spare output except that it will also flash whenever the FR HAT spare output for the indicator inside the car is flashing. This spare output must be used for the lobby light for US Navy jobs (NAVFAC) ON to indicate that one or more cars are on Fire Service Phase 1.
FR2 STATUS	In car fire Phase 2 service status
FSO	Fire service light output
IND SERV	Independent service has been activated by IND SERV input.
INSPECTION	Inspection has been activated by one of the controllers inspection inputs (INCT, INCP, INA, or MRIN)
NUDG	Usually occurs due to blocking of Photo Eye input. Results in reduced closing speed and torque. Nudging (reduce door closing speed and torque output)
NUDG BUZER	Active when nudging operation is invoked. Nudging buzzer
OPENING	The doors are opening or attempting to open. See Output DOF
OVERLOAD	**ON** once the load in the car has reached or is higher than the preset overload threshold as indicated by the related input (usually 100%). Car will not close doors or move if overload is active. Overload is bypassed by fire service
OVERLOAD2	**ON** once the load in the car has reached or is higher than the preset overload2 threshold as indicated by the related input (usually 120%). Car will not close doors or move if overload2 is active. Overload2 is NOT bypassed by fire service.
PIT FLOOD	Pit flood operation has been activated by the Pit Flood input which prevents access to certain floors
SERV IN	Car in service for hall calls

Table 2.3 Spare Outputs

Output	Description
SERV OUT	Car not in service for hall calls
SHUTDOWN	Car shutdown

Table 2.4 Acronym Descriptions and Memory Locations

Acronym	Description and Memory Location
NOT USED	An available spare input, or output, that has yet to be assigned @ CONFIG 01
2 BUS	Primary 110 VAC bus with respect to 1 bus (GND). View status @ SPB DIAG/ SPB Inputs 2BUS.B, or SPB Flags 2 BUS
2 STOP FLG	Car is configured for 2 stop operation. When a car is set to be a two stop installation, CONFIG 01 > Building Setup parameters must be properly set and DLMS (Door Lock Middle String) connection on SCE-HVI board must not be connected. View status @ PLD DIAG > PLD Flags 2 STOP FLG
2LS BUS	110 VAC bus, when active means that both locks and safeties are active, view @ PLD DIAG > PLD INPUTS, scroll to input M2L, or SPB DIAG > SPB INPUTS, M2L.B, M2L.P
2MV BUS	110 VAC bus supply From FUSE F2MV, monitoring source @ SPB DIAG > SPB Inputs M2MV.B
SC-3HN/ SC-3HN-2	The serial node board connected to car call push button fixtures (hall call boxes). Use Status Info Tab and then Hall Bus Inventory to inventory and test node boards
ABD	Access Bottom Down input from access key switch at bottom floor, view @ SPB DIAG > SPB Inputs ABD.B, ABD.P, also PLD DIAG > PLD Inputs ABD
ABU	Access Bottom UP input from access key switch at bottom floor, view @ PLD DIAG > PLD Inputs ABU
ADA	American with Disabilities Act. Denotes special signals, timers, devices, etc. to accommodate disabled access
APS ON	Auxiliary Power Supply input, signals the lift that we are running on auxiliary (battery) power
ATD	Access Top Down from Top Access Key switch, view @ PLD DIAG > PLD Inputs ATD
ATU	Access Top Up from Top Access Key switch view @ PLD DIAG > PLD Inputs ATU
BRAKE SW	Brake Switch. Must be assigned to an input terminal before brake position verification is performed. With the input assigned, Brake Pick SW Open/Closed/Flaky Faults are enabled
BRE.B	BRE signal from Safety Processor B @ SPB DIAG> SPB Outputs BRE.B and BRE.P
BREDC	BRE signal from Safety Processor B @ SPB DIAG> SPB Flags BRAKE DC
BRE.P	BRE signal from PLD @ PLD DIAG > PLD Outputs BREP
BRFLT	Brake Fault input to controller @ SPB DIAG > SPB Flags BRAKE FAULT
BRPK	Brake Picked indication @ SPB DIAG > SPB Flags BRAKE PICK
BROM	Brake contactor output monitor @ SPB DIAG > SPB Inputs BROM.A
BRP	Brake Potential @ PLD DIAG > PLD Inputs BRP
CAR LANTDN	Car Lantern Down
CAR LANTUP	Car Lantern Up
CC	Car Call @ SPA DIAG> SPA FLAGS, view flags starting with CCF (Car Call Front)
CC ENBLx	Car Call Enable, inputs used to enable a secured car call. View Status @ SYSTEM IO > PROGRAMMED INPUTS
CCF	Please see various CCF flags @ SPA DIAG > FLAGS
CCT	Car Call Dwell Time. Time for doors to remain open after a call has been answered. @ SPA DIAG/Door Dwell Times > Car call

Table 2.4 Acronym Descriptions and Memory Locations

Acronym	Description and Memory Location
CDB	Car Door Bypass Switch input @ SPB DIAG > SPB Inputs and also PLD DIAG > PLD Inputs
CDBO	From OFF position of switch used to bypass car doors. Used for monitoring switch. Car Door Bypass OFF @ SPB DIAG > SPB Inputs and also PLD DIAG > PLD Inputs. Car Door Bypass OFF
CDBOB	From OFF position of switch used to bypass car doors. Used for monitoring switch. Car Door Bypass OFF B @ SPB DIAG > SPB Inputs and also PLD DIAG > PLD Inputs
CGED	Car Gong Enable Down Output. Where digital PIs are missing, used to enable gongs
CGEU	Car Gong Enable Up Output. Where digital PIs are missing, used to enable gongs
COM	On Home Screen, Communications bus. On prints, Common
CONFIG	Configuration (input to PLD from SCE-CPU)
COP	Car Operating Panel
COS-Timer	Car Out of Service timer @ CONFIG 01 > System Timers. Car has been delayed and is no longer eligible to take hall calls
CP	Car operating panel in cab of elevator. Car Panel
CP DOWN	Car Panel Inspection Down
CP ENABLE	Car Panel Inspection Enable
CPU	Central Processing Unit
CP UP	Car Panel Inspection Up
CT	Top of elevator cab that includes car top inspection station, door operator, selector, etc. Car Top
CTEN	Part of car top inspection station that enables car top direction buttons. Cartop Enable (button/signal) @ PLD DIAG > PLD Flags, Flag label CTEN.P
CTPR	Cartop power control output located on SC-UPD J3.
CTST	Capture for Test switch input on CSCE-CPU board, waits for existing car calls to empty out. When activated, hall calls are no longer dispatched. Once car calls have been serviced, the car waits with doors closed, expected TEST operation to be initiated
CWI	Counterweight Input (derailed)
CYCTST	Certain critical circuits must be exercised after every operating cycle. We call this logic cycle testing. Cycle Test @ SPB DIAG > SPB Inputs and SPB Outputs, indicate end of run cycle test active
DCB	When programmed to do so, activating this input should close doors that are open. Door Close Button @ System IO > Programmed Inputs
DCF	The DCF output is asserted to pick up the Door Close relay and close the doors. Down Call Front @ SPA DIAG > SPA Flags, various, DCF AT PRESS, DCF BELW PRESS, etc.
DCF	Door Close Function @ SYSTEM DIAG > Door Control
DCL	When doors are fully closed, this input should be at zero volts (low). Door Close Limit @ SYSTEM DIAG > Door Control
DETS	This limit switch is required to slow down the elevator in a manner that will prevent the car/counterweight from striking the reduced-stroke buffer at or below rated buffer speed. Down Emergency Terminal Switch @ SYSTEM DIAG > Landing System
DFLT	A signal that informs the controller that the drive has failed. Drive Fault input to controller @ System IO > System Inputs
DLAB	Bottom door lock that will be bypassed during bottom floor hoistway access operation. Door Lock Access Bottom @ System IO > System Inputs
DLABB	Door Lock Access Bottom to PLD
DLAT	Top floor door lock that will be bypassed during top floor hoistway access operation. Door Lock Access Top @ System IO > System Inputs
DLATB	Door Lock Access Top to PLD

Table 2.4 Acronym Descriptions and Memory Locations

Acronym	Description and Memory Location
DLK	DLK will be active when both car and hoistway door locks are made. Door Lock @ PLD DIAG > PLD Flags, see HDLK (Hall), GDLK(GATE) and on CPU - LOCKS
DLM	Engaged when the car enters the leveling zone 6” above floor level. Down Level Marker @ System IO > System Inputs
DLMS	When intermediate door locks are made DLMS will be active (high). Door Lock Middle String @ PLD DIAG > PLD Inputs
DLMSB	Door Lock Middle String to PLD
DLN (1/2)	Door Line voltage
DOB	Activating DOB when the car is floor level will cause the doors to open when on normal automatic operation. Door Open Button @ System IO > Programmed Inputs
DOF	This output is asserted to activate the door open relay that will cause the doors to open. Door Open Function (signal) @ System IO > System Outputs
DOL	When the doors are fully open the DOL limit will go low (0 volts). It is high otherwise. Door Open Limit @ System IO > Programmed Inputs
DPM	Door position monitor limit switch input activates approximately 2” before door lock and is used to monitor the lock condition of the doors. Door Position Monitor @ System IO > Programmed Inputs
DRDY	DRDY is a signal from the drive that it is ready to operate. Drive Ready (input to controller) @ System IO > System Inputs
DRE	The drive tells the controller that it has control of the motor so it is safe to move the car. Drive Enable (output from controller) @ System IO > System Outputs
DREB	Drive Ready Enable (from processor B)
DRO	DRO tells the controller that it is outputting current to the motor. Car should be moving. Drive On (input to controller) @ System IO > System Inputs
DSL	As a backup to the normal slow down means, the slowdown limit switches remove power from the high speed circuits to slow down car. Down Slow Limit @ System IO > System Inputs, see flags DSL1/DSL2
DTL	Normally assigned as the Down Normal Terminal Limit that prevents the car from going on to the final limit switch. Down Terminal Limit @ System IO > System Inputs
DZ	The DZ/DZF/DZR signal that we are within 3” of floor level. Doors will not open unless this signal is active. Door Zone @ SPA DIAG > SPA Flags and SYSTEM DIAG > Landing System and SPB DIAG > Flags
EB	Emergency Brake @ SPB DIAG > SPB Flags
EB1B	EB1 solid state device enable from SPB
EB2A	EB2 solid state device enable from SPA
EB2BP	EB2 solid state device enable from PLD
EB4A	EB4 solid state device enable from SPA
EMDISP	Emergency Dispatch
EMS	Emergency Medical Service
EQ	In some jurisdictions a **ring and string** or seismic switch (or both) will be used to activate earthquake operation. Earthquake view @ SYST IO > PROGRAMMED INPUTS, EQ, SS or EQ CWT
EQ CWT	Earthquake Counterweight
EQI	Earthquake Input
EQR	Earthquake operation is a latching function that requires a manual reset which this switch provides. Earthquake Reset @ SPB DIAG > SPB Inputs, see EQR.B
ESC	Fed by Firefighter’s Stop Switch, Car top switch, emergency exit contact, and SOS switch. Emergency Stop Car @ System IO > System Inputs
ESCTO.B	Emergency Switch Cutout enable, Safety Processor B @ SPB DIAG > SPB Outputs

Table 2.4 Acronym Descriptions and Memory Locations

Acronym	Description and Memory Location
ETH	Ethernet
FB	Fed by fault bypass jumper on SCE-CPU. Fault Bypass @ SPB DIAG > SPB Inputs, see FBYP.P Flag
FR2 CANCL	In-Car Fire Service Car Call Cancel @ SYSTEM IO > PROGRAMMED INPUTS, FR2 Cancel
FR2 HOLD	In-Car Fire Switch Hold @ System IO > PROGRAMMED INPUTS, FR2 HOLD
FR2 OFF	In-Car Fire Switch OFF @ System IO > Programmed Inputs, FR2 OFF
FR2 ON	In-Car Fire Switch ON @ System IO > Programmed Inputs, FR2 ON
FLO	Fan Light Output @ SPA DIAG > SPA Flags also in CONFIG 01 > System Timers
FLPC	Fan Light Power Control
FLPWR	Car fan and light power control @ SPB DIAG > SPB Outputs, FLPWR.B
FLR GONG	Floor Gong
FLT	Fault
FLT BYP	Fault Bypass input on SCE-CPU board, view @ PLD DIAG> PLD INPUTS, FLT BYP JPR and also @ SYST I/O, System Inputs, FLT BYP
FPM	Feet Per Minute
FR	Fault Reset @ PLD DIAG > PLD Inputs, FLT RST BTN
FR HAT	Fire service light enable output @ System IO > Programmed Outputs
FR1 BUZZER	Fire service buzzer enable output @ System IO > Programmed Outputs
FR1 LIGHT	Fire service light, lobby, enable @ System IO > Programmed Outputs
FR1 OFF	Fire recall switch off input @ System IO > Programmed Inputs
FR1 ON	Fire recall switch on input @ System IO > Programmed Inputs
FR1 RESET	Fire Recall reset input @ System IO > Programmed Inputs
FRA	Fire Recall Alternate @ System IO > Programmed Inputs
FRS	Fire Recall Main @ System IO > Programmed Inputs
FRSA	Fire Recall Switch, this car Alternate @ System IO > Programmed Inputs
FRSM	Fire Recall Switch Main
GOS (1/2)	Governor Overspend switch In (1), Out (2)
GOV	Governor input that opens if car over speeds. Drops safety string and activates rope gripper. Governor
GP	General purpose. Cycle Test I/O if used
GP PLD	General Purpose output (PLD controlled)
GS/gate switch	PLD gate switch monitor @ PLD DIAG > PLD Inputs
GSB	Secondary gate switch monitor to PLD
HAPS	Hydraulic Auxiliary Power Supply (MCE APS product for hydraulic elevators)
HC	Hall Call
HCF	Hall Call Front
HCT	Hall Call Time. Defined time for doors to remain open @ SPA DIAG > Door Dwell Timers
HDB	From ON position of switch used to bypass hoistway doors. Also places car on inspection simultaneously. Hoistway Door Bypass signal to Safety Processor B @ SPB DIAG > SPB Inputs
HDBO	From OFF position of switch used to bypass hoistway doors. Used for monitoring switch. Hoistway Door Bypass OFF @ SPB DIAG > SPB Inputs
HDBOB	From OFF position of switch used to bypass hoistway doors. Used for monitoring switch. Hoistway Door Bypass OFF B @ SPB DIAG > SPB Inputs
ICEN	In Car Inspection Enable @ System IO > System Inputs

Table 2.4 Acronym Descriptions and Memory Locations

Acronym	Description and Memory Location
ICPD	In Car Inspection push button down @ System IO > System Inputs
ICPU	In Car Inspection push button up @ System IO > System Inputs
ICTD	Inspection Cartop down button @ System IO > System Inputs
ICTU	Inspection Cartop up button @ System IO > System Inputs
IN1H	Programmable 24VDC active high input. Seismic (SS) or Counterweight (EQH) input.
IN2H	Programmable 24VDC active high input. Seismic (SS) or Counterweight (EQH) input
INA	Inspection, Access. Hoistway access enable switch input @ System IO > System Inputs
INAO	Access enable input from Safety Processor A
INCP	Inspection Car Panel @ System IO > System Inputs
INCPO	Inspection Car Panel input from Safety Processor A
INCT	Inspection, Cartop @ System IO > System Inputs
INCTD	Inspection Cartop Down input
INCTO	Inspection Cartop input from Safety Processor A
INCTU	Inspection Cartop Up input
IND	Independent service input, @ SYSTEM IO > PROGRAMMED INPUTS
IND SERV	Independent Service
IP	Internet Protocol
LLI	Light Load Input. Input from load weigher @ System IO > Programmed Inputs
LOP	Landing Operating Panel
LOPM	Loss Of Power input to Safety Processor B from SCE-UPD board
LOT	Lobby Open Dwell Time. Defined time for doors to remain @ SPA DIAG > Door Dwell Times
MAIN CLOCK	Main Clock @ PLDDIAG > PLD Inputs
MBRE	Monitor for low side solid state driver for brake contactor @ PLD > PLD Inputs
MDRE	Monitor for Drive Enable (output from controller)
MC-CPI-2	The serial car panel interface board
MEB1 2	Monitor for low side solid state driver for EB1/2 to PLD
MEB3 4	Monitor of solid state driver for EB3/4 @ SPB DIAG > SPB Inputs Car stop bypass)
MLT	Motor Limit Timer (anti-stall) @ ACTION INFO > Prohibit Run/Start Due to
MPME	Monitor for PM solid state driver for Up Fast valve @ PLD DIAG > PLD Inputs
MPSBR	Brake contactor output monitor @ SPA DIAG > SPA Inputs
MRDN	Machine Room DOWN (inspection direction button) @ PLD DIAG > PLD Inputs
MREN	Machine Room Enable (inspection enable button) @ PLD DIAG > PLD Inputs
MRIN	Machine Room Inspection @ PLD DIAG > PLD Inputs
MRINO	Machine Room Inspection input from Safety Processor B
MRUP	Machine Room UP (inspection direction button) @ PLD DIAG > PLD Inputs
MSAF	Main Safety String input to Safety Processor B
NDF	Nudging Function (signal) @SPC DIAG > SPC Outputs
NUDG	Nudging (door closing) @ SYSTEM DIAG > Door control
NUDG BUZER	Nudging Buzzer
PFG	Passing Floor Gong @ System IO > Programmable Outputs, see FLR GONG flag
PHE	Photo eye protection device for elevator car doors @ SYSTEM DIAG > Door Control
PLD	Programmable Logic Device
PME	Primary Motor Enable

Table 2.4 Acronym Descriptions and Memory Locations

Acronym	Description and Memory Location
PMEB	Primary Motor Enable. Primary out put to Up Fast valve by SBP @ SPB DIAG > SPB Outputs
PMEP	Primary Motor Enable Primary output to pick UP Fast valve by PLD PLD @ PLD DIAG > PLD Outputs
PMP	Primary Motor Contactor Proving @ PLD DIAG > PLD Inputs - not used on Hydro Controllers
PSN	Position
PTI	Power Transfer Input. Use to shut down the elevator @ System IO > Programmable Inputs
RGOK	Rope Gripper OK
SAFA	Safety from processor A
SAFB	Safety from processor B
SAFC.P	Safety String Car @ SPB DIAG > SPB Inputs
SAFCT	Car safety string input from Safety Processor B.
SAFH.B	Safety String Hoistway @ SPB DIAG > SPB Inputs
SAFP	Safety PLD @ PLD DIAG > PLD Outputs
SANE(x)	Processing device verification @ PLD DIAG > PLD Flags
SCE-CON	Small interface board for LS-EDGE-EL landing system. Generally installed in COP.
SE	Safe Edge protection device for elevator car doors @ SYSTEM DIAG > Door Control
SHLD	Shield (“wire”)
SPA	Safety Processor A, car operation and control @ SPA DIAG
SPB	Safety Processor B, car motion control @ SPB DIAG
SPC	Safety Processor C, communications @ SPC DIAG
SPD(n)	Landing System speed input @ SPB DIAG > SPB Numeric, see Profile Dist and Pos
STD	Step Down
STU	Step Up
TEST	Test mode active output from Test/Pretest switch.
TRACTION	Traction/Hydro select (for PLD configuration) @ CONFIG 01 > Building Setup
UCF	Up Call Front @ SPA DIAG > SPA Flags SPA DIAG > SPA Flags
UETS	Up Emergency Terminal Switch @ SYSTEM DIAG > Landing System
UIM	Car has left the landing zone with both doors open. Unintended Motion
UIM RST/UIMR	Manual reset for UIM. Unintended Motion Reset @ System IO > System Inputs
ULM	Up Level Marker @ System IO > System Inputs
USB	Universal Serial Bus
uSD	Micro SD RAM
USLx	Up Slow Limit @ System IO > System Inputs see USL1 and USL2 flags
UTL	Up Terminal Limit @ System IO > System Inputs

Web Browser Access

Element hosts a web server that allows web browser access to the system to view the event log.

Web Setup

Building IT personnel can configure web settings for the Element controller through the on-board touch screen interface. If you are connecting locally, you can probably just connect Element to your local Ethernet and enter the Element IP address as described under “Access” below.

1. With Element powered and on machine room inspection operation, select the CONFIG 03 screen, Network Settings menu on the touch screen.
2. Set and save IP settings appropriate to the interface being used.

Access

1. Launch the web browsing application.
2. Enter the Element IP address into the browser URL window, and press Return.
3. Once the connection is established, an interface screen will appear.

USB Parameter Transfer

Controller parameter settings can be copied to a USB drive (thumb drive) and transferred to a second controller to save set up time. Should it be necessary to replace the SCE-CPU board, be sure to backup the parameter settings so they can be uploaded to the new board. To transfer the parameter settings to a USB drive:

1. Insert the USB drive in the USB connector on the SCE-CPU board.
2. On the touch screen, navigate to the Utilities screen.
3. Select File Transfer.
4. Select Export Current Settings to USB Drive. Follow on-screen instructions.

Uploading the parameters to the next controller:

1. Insert the USB drive in the USB connector on the SCE-CPU board.
2. On the touch screen, navigate to the Utilities screen.
3. Select File Transfer.
4. Select Import & Apply Settings from USB Drive. Follow on-screen instructions.

Event Log Archive/Email

The Element event log is stored on a micro SD card on the SCE-CPU board. When log capacity is reached, the oldest event will be deleted as a new event is recorded. See also Event Log Viewing on page 2-93.

USB Archive

You can copy the event log from the SD card to a USB drive.

1. Insert a USB drive on the SCE-CPU board.
2. Open the UTILS screen; select File Transfer.
3. Scroll to the lower screen; press Export Events to USB Drive.
4. Press OK to confirm or Exit to abort.
5. Place the USB drive in a USB port on your PC (or an attached adapter).
6. If you have Microsoft Excel or a similar program, open it and import the log file from the USB drive. It will open in table format and may be saved as an Excel file.
7. If you do not have Excel or a similar program, you can open the log file in any word processing or “text” application and save it as simple text or as a .csv (comma separated values) file.

Ethernet Archive

If the Element control is connected to Ethernet:

1. Open your web browser.
2. Enter the Element IP address into the URL entry window and press Return.
3. When contact is established, select the Faults tab. After a few moments, current events will appear followed by the Event Log.
4. Depending upon applications available on your PC:
   - Right click on the screen and select “Select All.”
   - Right click on the highlighted text and select “Copy.”
   - Open an application like Microsoft Word or Simple Text on your PC.
   - Select Paste. (A landscape page layout is best if you are in a word processing application.)
   - Save the file.

   When you initially right-clicked on the screen, you may have seen other options such as Save to PDF, or Export to Excel. Additional options like these will vary depending on what applications are installed on your PC. These additional options are also available to you as a way to capture and save event log files.

Email

Once the log file is on your PC, you can easily attach it to an email and send it to any recipient for troubleshooting help or central archiving.

Troubleshooting Reference

Danger
Always observe safety precautions when troubleshooting. Lethal voltages are present.

This section includes:

- Bus voltage testpoints and fuse locations
- Touch screen tools, page 2-32
- Circuit board descriptions, page 2-32
- Fault Message Descriptions, page 2-52

Bus Voltage Testpoints and Fuse Locations

Required operating voltages are distributed through fused buses.

Table 2.5 Bus Voltages

Bus	Description	Testpoints
1	Ground	Controller ground is critical. Poor ground introduces potential danger, electrical noise, and can prevent system inputs, outputs, and assemblies from working correctly. System must be grounded to a point certified by an Electrician. NEC 250.
2	110 VAC	110VAC, 2 Bus for high voltage connections throughout system
24	24 VDC	24VDC, +24, 24CTP, 24HWY buses.

Table 2.6 SC-UPD Board Fuses

Fuse	Use
F2	2 Bus, 2A, 250V. Bussman AGC, Littelfuse 312
F2MV	2MV Bus, 3A, 250V. Bussman MDQ, Littelfuse 313
F24CTP	24CT Bus, 2A, 250V, Bussman AGC, Littelfuse 312
F24FS	F24FS Bus, 2A, 250V. Bussman MDQ, Littelfuse 313
F24HWY	24H Bus, 1A, 250V, Bussman AGC, Littelfuse 312. 24V supply to fire alarm initiating devices, switches, and indicators.
F24VDC	24VDC Bus, 6A, 250V, Bussman AGC, Littelfuse 312.
FDLN1	F7, 4A, 250V, Bussman MDQ Littelfuse 313. AC to door operator.
FDLN2	F8, 4A, 250V, Bussman MDQ Littelfuse 313. AC to door operator.
FFLO	Car fan and light output. 6A, 250V, Bussman AGC, Littelfuse 312
FGOV	GOS1, 4A, 250V, Bussman AGC, Littelfuse 312. 110VAC to governor overspeed switch.
FXL1	10A, 250V, Bussman AGC, Littelfuse 312. Supply for CPU, CTPR, LOPM, 24CT, and 24H buses.
FXL2	10A, 250V, Bussman AGC, Littelfuse 312. Supply for CPU, CTPR, LOPM, 24CT, and 24H buses.

Table 2.7 Backplane Fuses

Bus	Description	Type
FL1 - FL3	Line Voltage	See fuse labeling in controller.

Touch Screen Tools

System I/O

At this level, inputs and outputs are grouped separately and alphabetically with no deference to their function.

- Inputs and Outputs: Indicators reflect activation of that physical input or output. When the board LED is lighted, the indicator will also be lighted.
  - System Inputs: Dedicated (non-programmable) inputs status indicators.
  - System Outputs: Dedicated (non-programmable) outputs status indicators.
  - Programmed Inputs: Programmable inputs status indicators.
  - Programmed Outputs: Programmable outputs status indicators

1. If an input is not in the proper state, troubleshoot the connection and the source.
2. If an output is in the proper state but the system is not reacting accordingly, troubleshoot the connection and the destination equipment.
3. If an output is not in the proper state, check the job prints to see what inputs or internal flags must be asserted in order to enable the output.
   - Troubleshoot associated inputs in System I/O or System Diagnostics.
   - Troubleshoot internal flags according to their origination (i.e., safety processors A, B, or C, or PLD).

System Diagnostics

At this level, inputs and outputs are gathered into sets according to the system they affect (their collective function). (See troubleshooting steps above.)

- Motion I/O: Indicators for input and output activity during car motion.
- Door Control: Indicators for door related inputs and outputs.
- Landing System: Indicators for landing system related inputs and outputs.
- Event Log: Time stamped entries for system events and faults.
- Diagnostics Tree: Indicators on this screen must be ON in order for the related function to succeed. Some indicators are single; some (+) expand to a list when selected. If the system is not doing what it is supposed to, an unlighted indicator points you to the problem.
- Active Faults: Displays currently active faults.

SPA, SPB, SPC, PLD Diagnostics

For each system processor and for the PLD, these screens can provide information useful for in-depth diagnostics. Flags are visible indicators of active signals, descriptively labeled so you can understand what they represent. Numerics are register data bit information and are intended for factory diagnostics. They are also useful when MCE Technical Support is assisting in diagnosing a system.

The job prints will indicate what flags/functions are required to enable an output. The output (or an input) can be viewed through the System I/O or System Diagnostics screen. Associated flags/functions can be viewed through the screen for the appropriate safety processor or PLD.

SPA Diag Car operating control related indicators.

SPB Diag Motion related indicators (contactors, brake, motor, etc.).

SPC Diag Communications related indicators.

PLD Diag System wide indicators.

Action Info

This display provides indicators that can help to discover why an unexpected action is occurring.

- Car Call Canceled Due To: Inputs or states that can cause car calls to be cancelled.
- Hall Call Canceled Due To: Inputs or states that can cause hall calls to be cancelled.
- Door Open Due To: Inputs or states that can cause doors to open or remain open.
- Prohibit Run/Start Due to: Inputs or states that can cause starting or running to be disabled.
- Door Close Due To: Inputs or states that can cause doors to close or remain closed.

Status Info

View:

- CPU, BUS, COM Status.
- Hall Bus Inventory: When all hall calls are installed and functioning properly use the INVTRY control on this screen to add them to system memory. When troubleshooting hall calls at a future date, use the TEST control to automatically poll and test all switches and lamps.
- Software version information.
- CAN Bus viewer
- Address Diagnostics
- Other Car Settings such as Emergency Power, etc.

Stats

Collected statistics for maintenance and system activity.

- Maintenance Statistics: Collected run-related statistics. Compiled until manually cleared.
- Hourly Statistics: Car and hall call statistics per hour for the preceding 24 hours.

Scope

The virtual oscilloscope allows you to select up to four signals from an elevator subsystem and display them in near real-time.

1. Select the subsystem:
   - System Inputs
   - System Outputs
   - Landing System
   - Programmed Inputs
   - Programmed Outputs
2. Use the scroll arrows to move through signals.
3. For each desired signal, tap on one of the four boxes on the right of the screen. The signal will appear in the box.
4. Tap on OK to return to the selection screen, then on View Scope.
5. Touch the scope arrows to adjust trace speed (amount of time represented by screen graticules).
6. The selected signals will remain on the scope until you replace them with others.

Circuit Board Descriptions

Element controller circuit boards:

- MC-CPI-2: COP serialization, landing system interface, added I/O page 1-49, page 2-35
- SC-3HN-2: Serial Hall Call Node Board, page 1-43
- SCE-BRK: Brake board, page 2-37
- SCE-CON: Cartop Connections Board, page 2-38
- SCE-CPU: Controller processor, page 2-40
- SCE-HVI: High voltage interface, page 2-47
- SCE-UPD: Unregulated power distribution, page 2-50

MC-CPI-2

MC-CPI-2 boards provide serialization of control panel inputs and assignable I/O for interface to landing systems and/or door operators. CPI-2 boards are installed in the car control panel enclosure or, when used to expand System I/O, in the controller enclosure as well.

Figure 2.5 MC-CPI-2 Board

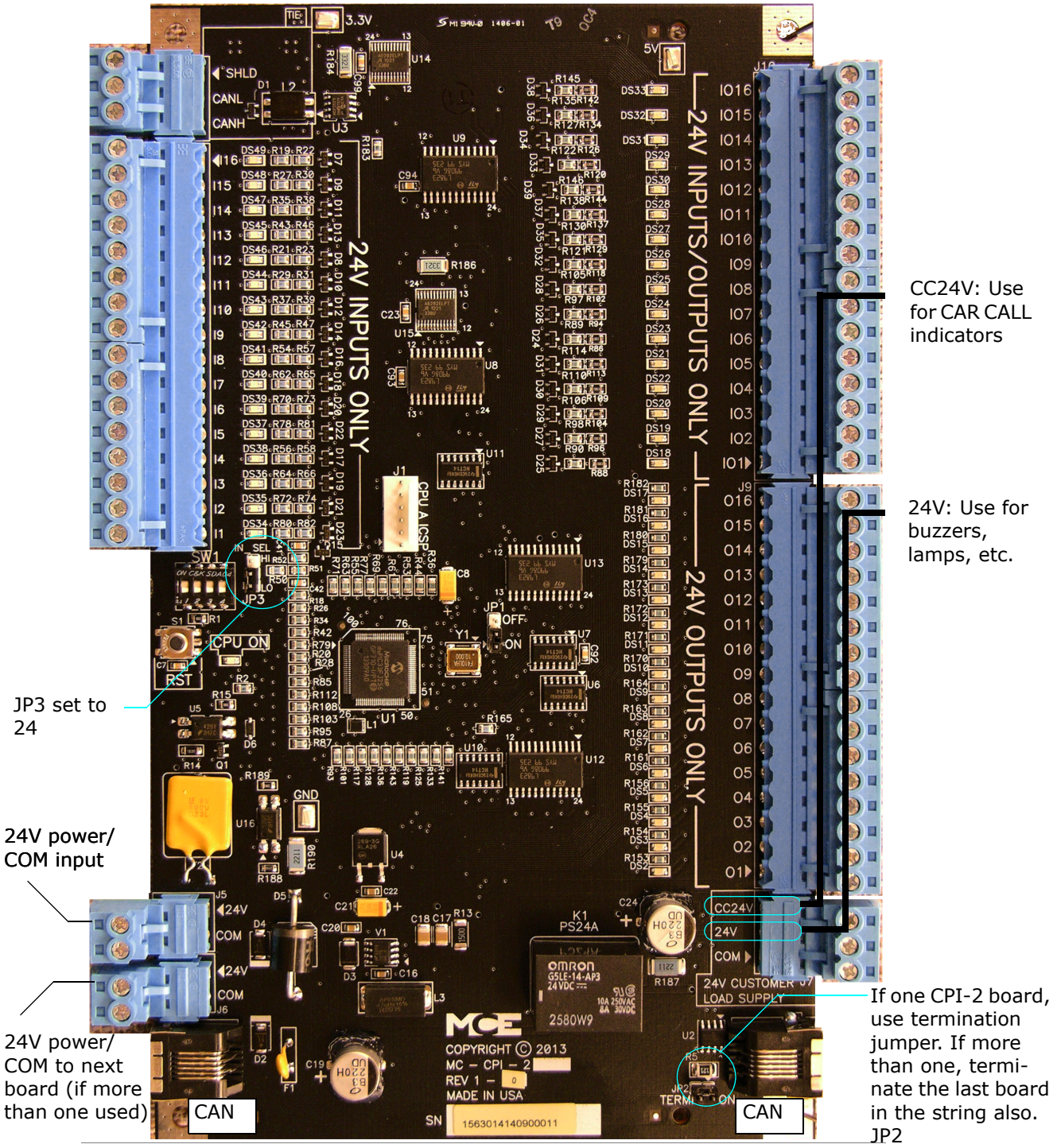

CPI-2 Configuration The CPI-2 board(s) in your controller is/are factory-configured to match the job requirements.

- Jumpers:
  - JP1: Factory
  - JP2: Used to terminate the CAN communication bus. If you have just one CPI-2 board, this jumper should always be in the ON position. If you have more than one CPI-2 board, use this jumper on the last board in the string only.
  - JP3: Sets the inactive level (OV or 24V) for the 24V INPUTS ONLY connections.
    - 24V: OFF state is 24V. ON state is 0V. (**USE FOR ELEMENT applications**.)
    - 0V: Off state is 0V. ON state is 24V.

Note

24V is the maximum input that may be applied. For outputs, 24V, 6W is the maximum load supported.

- DIP Switch SW1, **Board address switches**: Four-position DIP switch SW1 provides a unique address for each CPI board (you should never have two CPI boards with the same SW1 setting).

DIP 1	CPI Boards		
Board	**SW1**	**SW2**	**SW3**
0	Off	Off	Off
1	On	Off	Off
2	Off	On	Off
3	On	On	Off

- SW1, switch 3, must remain OFF at all times.
- SW1, switch 4, determines CAN baud rate:
  - ON: 500k - used if board is mounted INSIDE the Element controller cabinet
  - OFF: 250k - default setting; use with board(s) mounted in COP

Installation and Connections

Please refer to “Serial Car Call Board” on page 1-49.

SC-3HN or SC-3HN-2 Serial Hall Call Node Board

Please refer to “Hall Calls” on page 1-43 for a detailed description.

SCE-BRK Brake Control Board

This board provides pick, hold and relevel voltages for the machine brake.

Figure 2.6 SCE-BRK Board

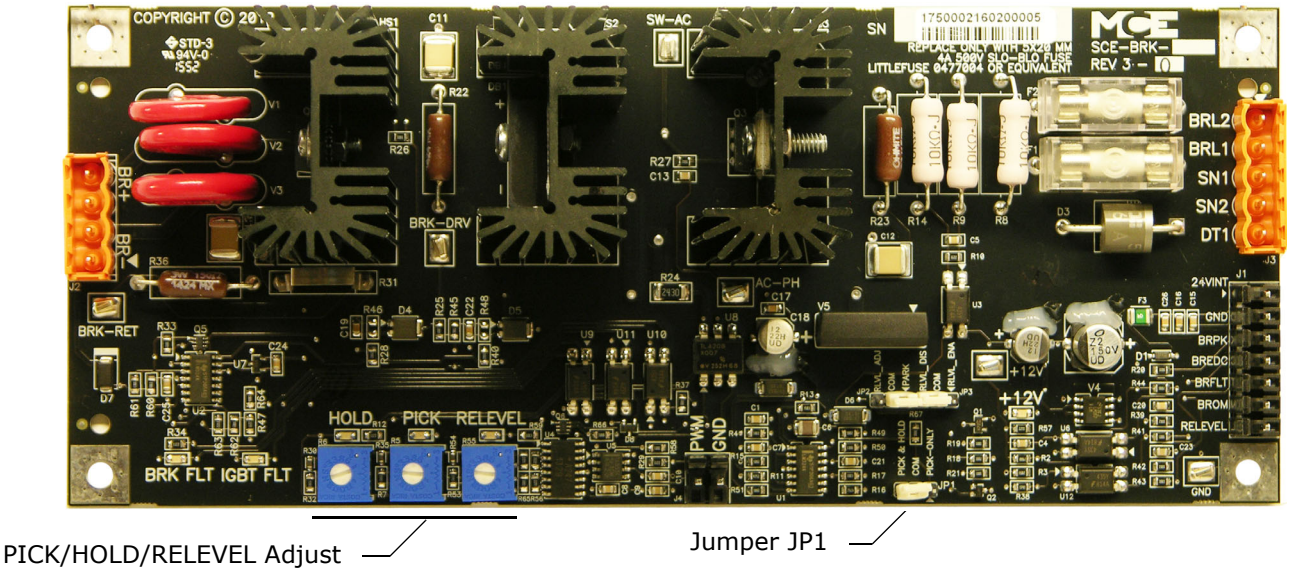

Figure 2.7 Brake Timing

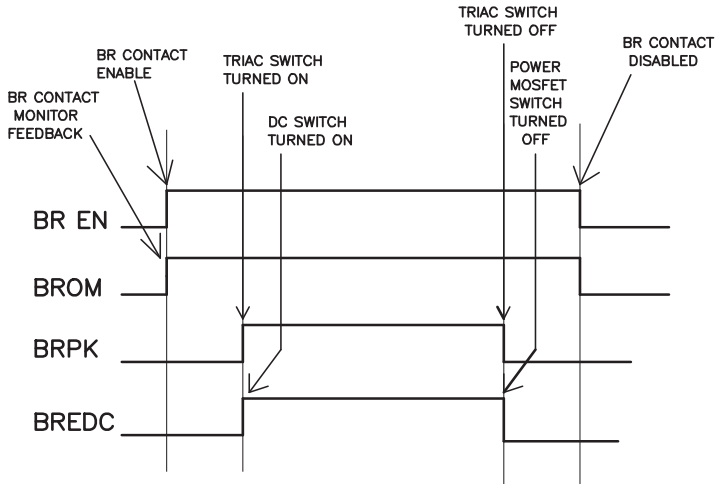

Brake Transformer The transformer powering the brake board can be set from 80 VAC to 280 VAC depending on tap settings and whether taps are connected in series or parallel. Maximum power is 300 VA. This setting is made at the factory per your configuration selections.

If you are unable to achieve adequate brake current, check transformer wiring. If the windings are wired in series; rewire in parallel.

If coil current is excessive, check transformer wiring. If the windings are wired in parallel; rewire in series.

SCE-CON Board

The SCE-CON board is an interface between car-mounted equipment and the elevator controller. The SCE-CON board is connected to the elevator controller using a CAN serial connection and additional conductors as required through the traveller and connects to the landing system and car call serializing boards through local CAN and discrete connections.

Figure 3. SCE-CON Connector Board

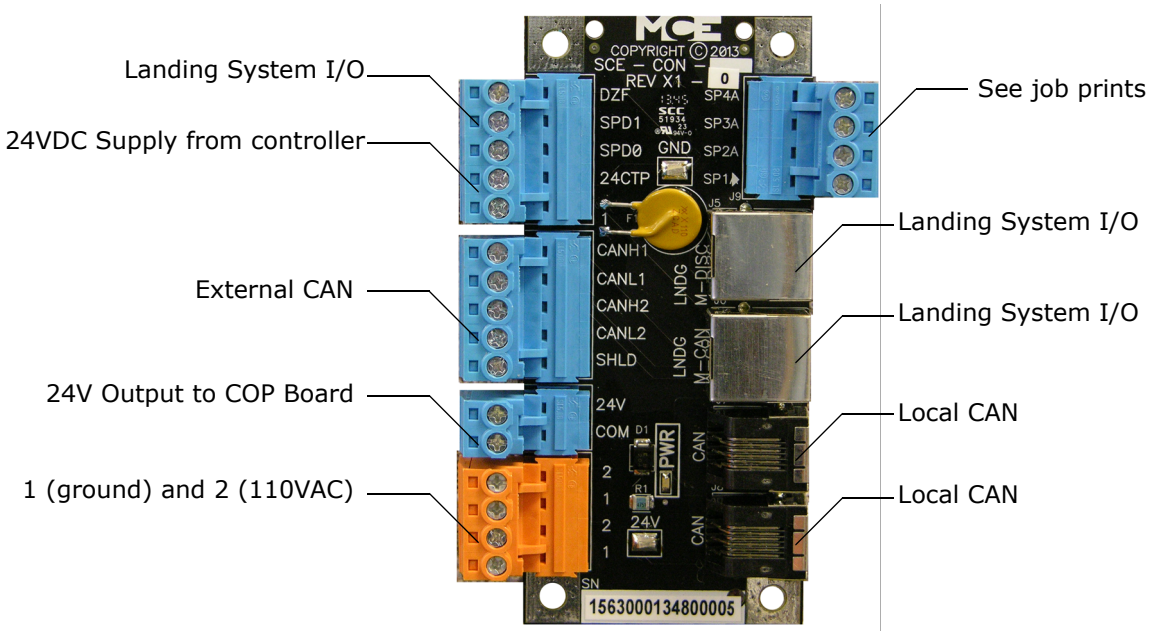

Table 2.8 SCE-CON Connector Assignments

Connector	Assignment	Description
J1	SPD0	Speed bit 0 from the LS-EDGE landing system
J1	SPD1	Speed bit 1 from the LS-EDGE landing system
J1	DZF	Front Door Zone signal from the LS-EDGE landing system
J1	24CTP	24VDC fused power out (F1 is 72V, 1100mA)
J2	CANH1	CAN port 1, H
J2	CANL1	CAN port 1, L
J2	CANH2	CAN port 2, H
J2	CANL2	CAN port 2, L
J2	SHLD	CAN shield
J3, Pin 1	2	120VRMS from machine room
J3, Pin 2	1	Ground
J3, Pin 3	2	120VRMS to load weigher
J3, Pin 4	1	Ground
J4	24V	24V to first MC-CPI-2 board
J4	COM	Common for 24V
J5	SPD0	Speed bit 0 from LS-EDGE sensor
J5	SPD1	Speed bit 1 from LS-EDGE sensor
J5	SPD2	Speed bit 2 from LS-EDGE sensor
J5	SP1A	Position bit
J5	SP2A	Position bit

Table 2.8 SCE-CON Connector Assignments

Connector	Assignment	Description
J5	SP3A	Position bit
J5	DZR M	Door Zone Rear
J5	SP4A	Position bit
J5	CGND	Pins 9 and 10. Chassis ground.
J6	CANH2	CAN port 2, H
J6	CANL2	CAN port 2, L
J6	DZF M	Door Zone Front
J6	CANH1	CAN port 1, H
J6	12V BAT	12V, Battery output
J6	CANL1	CAN port 1, L
J6	DGND	Ground
J6	V UNREG	Unregulated ~24V
J6	CGND	Pins 9 and 10. Chassis ground.
J7	SNN1	Unused
J7	V UNREG	Unregulated ~24V from machine room
J7	CANH2	CAN port 2, H
J7	CANL2	CAN port 2, L
J7	Pins 4, 6	Ground
J7	M1, M2	Chassis ground
J8	SNN 2	Unused
J8	V UNREG	Unregulated ~24V from machine room
J8	CANH2	CAN port 2, H
J8	CANL2	CAN port 2, L
J8	Pins 4, 6	Ground
J8	M1, M2	Chassis ground

SCE-CPU

The SCE-CPU board provides system logic and control. The touchscreen is mounted on this board as are machine room control switches.

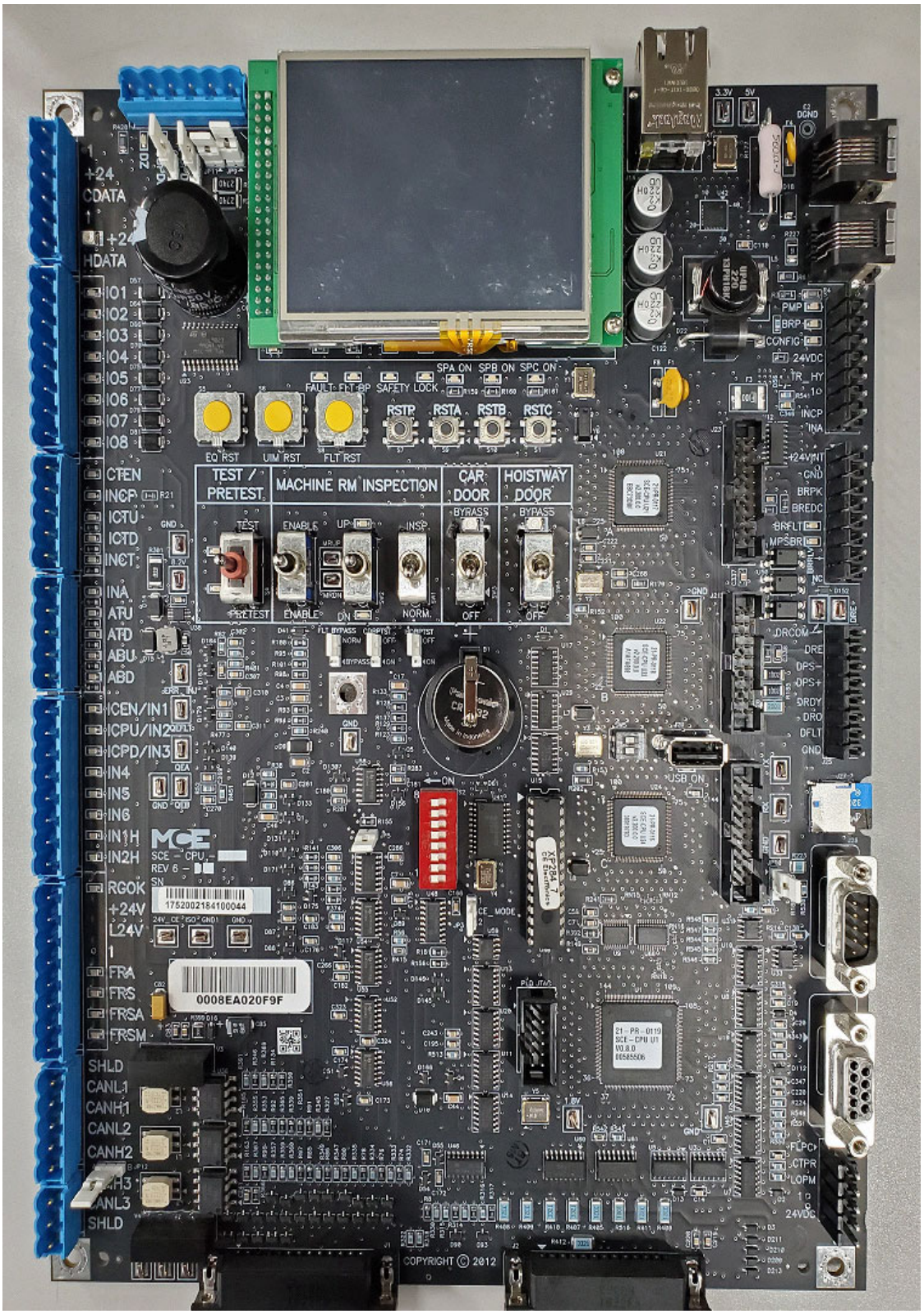

CPU Switches, Interface

CPU board controls are shown below.

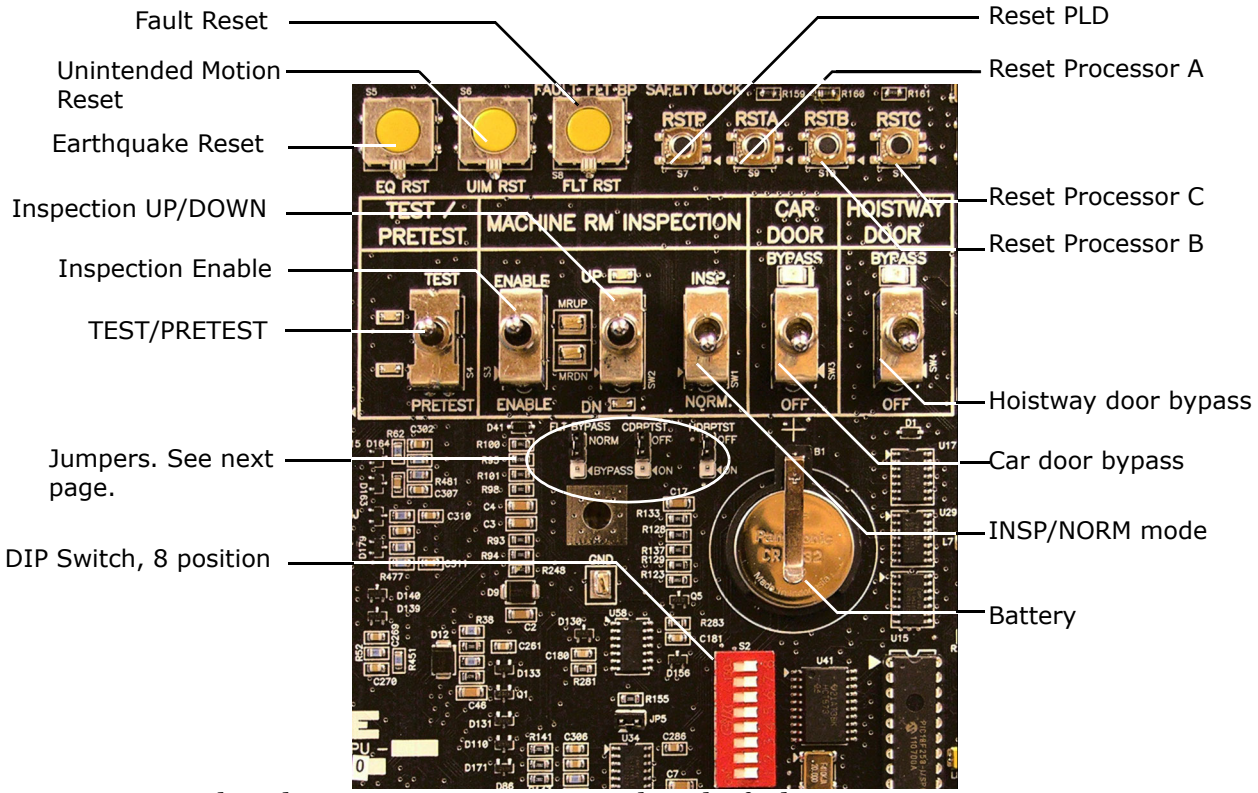

- Earthquake Reset: Press to reset earthquake fault.
- Unintended Motion Reset: With the Machine RM Inspection switch in the INSP position, press the UIM RST button for 6 seconds to reset UIM fault and Emergency Brake.
- Fault Reset: Press to reset latching faults.
- PLD & Processor Resets: Steadily lighted indicators for the PLD and Processors indicate proper function. Press the Reset to reboot the associated processor or PLD.
- Test/Pretest: Placing the car on Pretest causes it to service any registered car calls but not respond to hall calls. When car calls are satisfied, the idle car will recall to the programmed floor or remain at the last floor served if no recall floor is programmed. Door action at the capture floor is also programmable.
  Placing the car on Test mode allows a technician or adjuster to exercise the car at normal operating speed but disables doors to prevent entry. Car calls may be placed through the touch screen.
- Machine Room Inspection: Placing the INSP/NORM switch in the INSP position puts the car on machine room inspection operation. In this mode, the car will run at inspection speed in response to the Enable and Up or Down switches being pressed and held. The car will stop when the switches are released.
- Door Bypass: Placing a switch in the Bypass position will allow the car to be run in the absence of the normal Car door and/or Hoistway door inputs (door limits, lock contacts, position monitor).
- CPU Battery: Maintains power to clock (date and time) used by event log. If “Cell Battery Volts Low” message is displayed, replace CPU battery with CR2032, lithium-manganese, 3.0 V, 225mAh, ANSI 5004LC. Battery can be replaced while power is on, but it is safer to

first remove power to avoid short to board. Reset clock using UTILS > DATE AND TIME.
Jumpers: ("SCE-CPU Testpoints and Jumpers" on page 2-44)

- JP1, CDBPTST: ON enables Car Door Bypass regardless of switch position or functionality; OFF is the normal position for the jumper.
- JP2, HDBPTST: ON enables Hoistway Door Bypass regardless of switch position or functionality; OFF is the normal position for the jumper.
- JP3, MCE only. Factory set to configure CE bus.
- JP4, FLT Bypass: To bypass faults:
  - Construction Mode: FLT BYPASS jumper to BYPASS. UTILS > CONSTRUCTION FAULT BYPASS ON. Car on INSPECTION (Cartop). Bypasses controller response to most faults. Bypass remains active, even across power cycles, until set to NORM.
  - Inspection Mode: FLT BYPASS jumper to BYPASS. UTILS > INSPECTION FAULT BYPASS ON. Car on INSPECTION. Bypasses controller response to many faults. Bypass remains active, even across power cycles, until set to NORM.
  - Automatic Mode: FLT BYPASS jumper to BYPASS. UTILS > AUTOMATIC MODE FAULT BYPASS ON. Bypasses controller response to some faults. Bypass times out after two hours. Countdown visible on Home screen. If more time required, remove and replace FLT BYPASS jumper (in BYPASS position).
  - JP5, PGM SOURCE: Factory use only. Leave in default position.
  - JP6, EDGE/ENCODER: If the installation uses the MCE LS-EDGE-EL landing system, set to 0. Otherwise set to+.
  - JP7, EDGE/ENCODER: If the installation uses the MCE LS-EDGE-EL landing system, set to EDGE. Otherwise set to ENCODER.
  - JP8, PGM SOURCE: Factory use only. Leave open.
  - JP9, ENCODER INTERFACE: Normally closed.
  - JP10, A/B: Set at MCE depending upon the serial drive interface required -
    A = TORQMAX/KEB
    B = MAGNETEK
  - JP11, ENCODER INTERFACE: Normally closed
  - JP12, CAN termination, CAN3: A = terminated, B = unterminated. Used to terminate hall call bus CAN3 at the last controller in a duplex installation or the ONLY controller in Simplex installations.

Duplex Elevator Hall Call CAN3 Interconnect

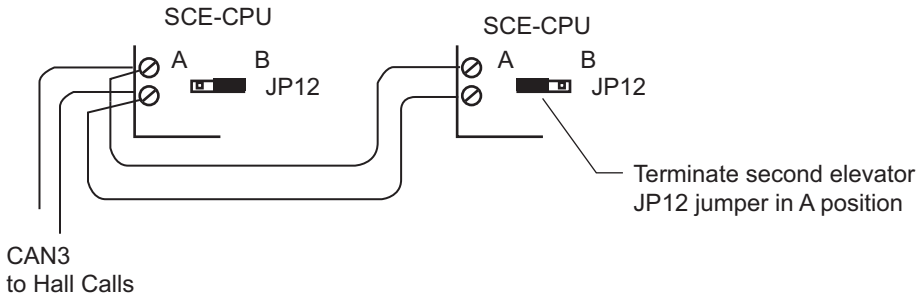

- CPU DIP Switches:
  - 8-position DIP switch S2 is set according to the type of serial PI fixtures on the job (CE/E-Motive). For CE fixtures all switches should be in the ON position (left). The number 1 switch (lower) may be placed in the OFF position to start a CE fixture self-test. The test exercises all of the characters potentially displayed on the fixture and is viewed on the fixture itself. For E-Motive fixtures all switches should be in the OFF position (right).
  - 2-position DIP switch SW5 is used to update system software. Leave in OFF (Left) positions unless updating software. See "Updating System Software" on page 2- 43.
- Testpoints: "SCE-CPU Testpoints and Jumpers" on page 2-44

Updating System Software

System software updates are initiated using two-position DIP switch SW5 on the SCE-CPU board. Before updating, the system first checks for a USB drive in the CPU board USB port. If the update USB drive is present, the system will copy the software from the USB to the micro-SD card, replacing the current version files on the card. The system will then update from the SD as directed by the DIP switches.

1. Place the car on Inspection and remove power to the controller. If this installation is a duplex, also remove power to the other car or disconnect CAN 3 from the other car. Power should be applied to **only** the car for which software is being updated or CAN 3 should be disconnected from the other car.
2. If you are updating from a USB drive, insert it into the USB port on the SCE-CPU board.
3. Position the DIP switches to direct the update:
   - Both switches ON (Right): Update all system devices regardless of existing software version (recommended).
   - Switch 1 (top) ON, Switch 2 (bottom) OFF: Update only when source file is different from existing.
4. Restore power to the controller. The process will begin, either copying USB files first or immediately beginning the update from the SD card.

Depending on how many files are on the USB, there may be a delay of around thirty seconds before copying begins. Update time depends on the number of devices being updated but is generally about fifteen minutes. The touch screen keeps you appraised of what is happening but it will go blank for a few minutes while the display processor itself is updating. (The SPC processor LED will flash while the screen is blank to assure you that the process is continuing properly. Each blink equals about 3% complete.)

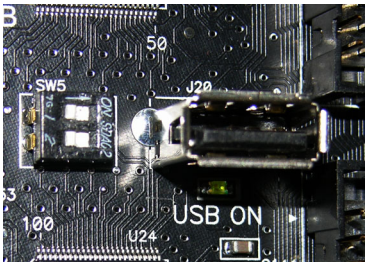

5. Part way down on the left of the Firmware Update screen you will see an indication for SPC (CSC): either PENDING or SUCCESS. If instead FAILED is displayed, press the RSTC push button.
6. When updating is complete, the touchscreen will tell you to place both switches on the DIP switch back to the OFF (Left) position to resume normal operation.

If new LCD graphics are available, the graphics file will be copied to the display processor as part of the startup sequence.

7. Take car off machine room inspection.
8. Leave the USB drive in place until the system is fully operational (graphics have completed loading).

9. Leave USB drive in J20. Once the car has been fully adjusted, navigate to UTILS > FILE TRANSFER > EXPORT CURRENT SETTINGS TO USB DRIVE and follow on-screen instructions. You now have a backup copy of the controller parameters.

Replacing the SCE-CPU Board

Before removing the SCE-CPU board, be sure to copy the current parameter settings (backup) to a USB drive (thumb drive) see "USB Parameter Transfer" on page 2-29. Once the SC-CPU board has been replaced, the parameter settings can be uploaded (transferred from the USB drive to the new board), thereby saving setup time.

Figure 2.1 SCE-CPU Testpoints and Jumpers

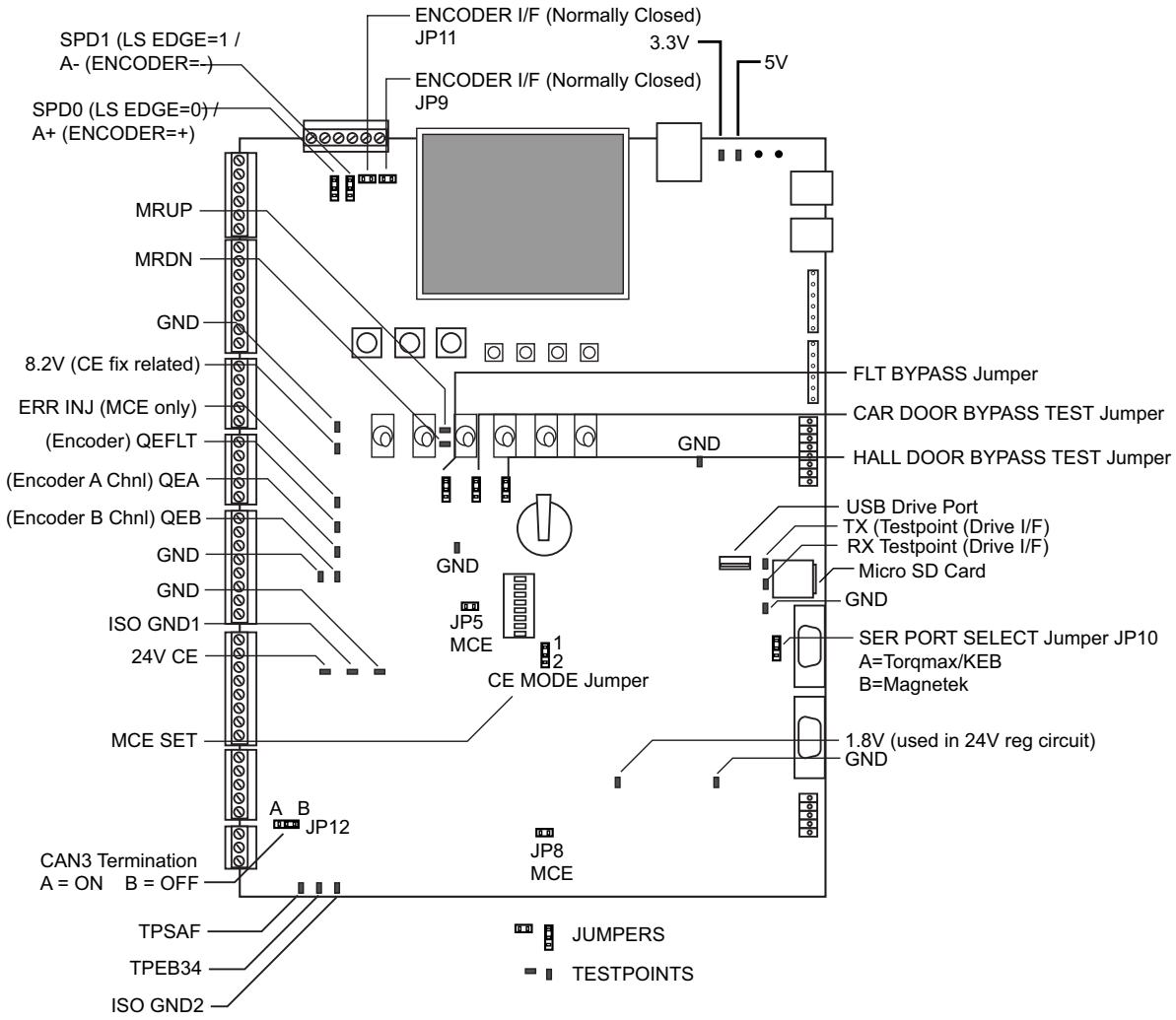

Table 2.9 CPU Connector Assignments

Connector	Assignment	Description
J3	RGOK	Hydraulic: Thermal overload and/or oil tank temp shutdown input. Traction: Rope Gripper OK (not set) input. OK = 24V. Triggered = 0V.
J3	+24V	+24V supply output for use with RGOK.
J3	L24V	+24V supply output for use with counterweight derailment detection.
J3	1	Common
J3	FRA	Main landing smoke/fire sensor input. Recall to alternate floor.
J3	FRS	Smoke/fire sensor for all landings but the main landing. Recall to main floor.
J3	FRSA	Fire Service Alternate initiating device, machine room input. Recall to alternate floor.
J3	FRSM	Fire Service Main initiating device. Recall to main floor.
J4	MCE TEST	Do not use.
J5	ICEN/IN1	In car inspection enable / programmable input. See job prints. If the CONFIG01, Building Setup in-car inspection option is set to Yes, this input may only be used for in-car inspection Enable.
J5	ICPU/IN2	In car inspection UP input / programmable input. See job prints. If the CONFIG01, Building Setup in-car inspection option is set to Yes, this input may only be used for in-car inspection Up.
J5	ICPD/IN3	In car inspection DOWN input /programmable input. See job prints. If the CONFIG01, Building Setup in-car inspection option is set to Yes, this input may only be used for in-car inspection Down.
J5	IN4	Programmable input. See job prints.
J5	IN5	Programmable input. See job prints.
J5	IN6	Programmable input. See job prints.
J6	1 (pin 1)	Common. Serial fixtures to CAR.
J6	+24 (pin 2)	24V. Serial fixtures to CAR.
J6	CDATA (pin 3)	Data. Serial fixtures to CAR.
J6	1 (pin4)	Common. Serial fixtures to HALL.
J6	+24V (pin 5)	24V. Serial fixtures to HALL.
J6	HDATA (pin 6)	Data. Serial fixtures to HALL.
J7	CAN, modular	See job prints. May be used with MC-CPI-2 board for extra I/O in cabinet.
J8	CAN, modular	See job prints.
J9	SHLD	Shield connection, landing system/hoistway encoder
J9	B-	Quadrature B-, hoistway encoder
J9	B+	Quadrature B+, hoistway encoder
J9	A-/SPD1	Quadrature A- (encoder) or SPD1 from LS-EDGE-EL
J9	A+/SPD0	Quadrature A+ (encoder) or SPD0 from LS-EDGE-EL
J9	DZ	Door Zone, input
J10	INA	Access Enable
J10	ATU	Top Access, UP direction input
J10	ATD	Top Access, DOWN direction input and down access limit
J10	ABU	Bottom Access, UP direction input and up access limit
J10	ABD	Bottom Access, DOWN direction input
J11	CTEN	Cartop inspection enable input
J11	INCP	In car inspection/normal input
J11	ICTU	Cartop inspection UP button input
J11	ICTD	Cartop inspection DOWN button input

Table 2.9 CPU Connector Assignments

Connector	Assignment	Description
J11	INCT	Cartop inspection/normal input
J27	SD MICRO	Port for SD card event storage.
J13	I/OI/O1 - IO8	Programmable Input/Outputs. See job prints.
J14	ETHERNET	Ethernet port. Web App configuration/per job use. See job prints.
J15	PLD JTAG	MCE use only.
J16	SHLD	CAN shield connection.
J16	CANL1	CAN connection 1, Low
J16	CANH1	CAN connection 1, High
J16	CANL2	CAN connection 2, Low
J16	CANH2	CAN connection 2, High
J17, MCE	FLPC	Fan/Light power control output
J17, MCE	CTPR	Cartop box power control output
J17, MCE	LOPM	24V power monitor
J17, MCE	1	Common
J17, MCE	24VDC	24VDC
J18	CANL3	CAN connection 3, Low
J18	CANH3	CAN connection 3, High
J18	SHLD	CAN shield connection.
J19, MCE	PMP	Primary motor contactor
J19, MCE	BRP	Brake contactor
J19, MCE	CONFIG	Door lock string configuration input.
J19, MCE	24VDC	24VDC output
J19, MCE	TR_HY	Traction/Hydro default determination.
J19, MCE	1	Common
J20	USB	USB drive port
J21, MCE	MCE TEST	Do not use.
J22, MCE	+24VINT	24V power for 12V source on Brake Board
J22, MCE	GND	Ground for 12V source on Brake Board
J22, MCE	BRPK	Brake pick control
J22, MCE	BREDC	Brake enable DC
J22, MCE	BRFLT	Brake fault
J22, MCE	BRRLV	Brake Relevel Control
J22, MCE	MPSBR	Power supply/Brake Enable Monitor
J22, MCE	NC	No Connection
J23, MCE	MCE TEST	Do not use.
J24, MCE	Serial	Drive serial control
J25, MCE	DRCOM	Drive Common
J25, MCE	DRE	Drive Enable
J25, MCE	DPS-	Drive power supply negative
J25, MCE	DPS+	Drive power supply positive
J25, MCE	DRDY	Drive Ready input
J25, MCE	DRO	Drive On input
J25, MCE	DFLT	Drive fault input
J25, MCE	GND	Ground
J26, MCE	Serial	Drive serial control

SCE-HVI

The SCE-HVI board provides a control and input interface to components operating at higher voltages.

Figure 2.2 SCE-HVI Board

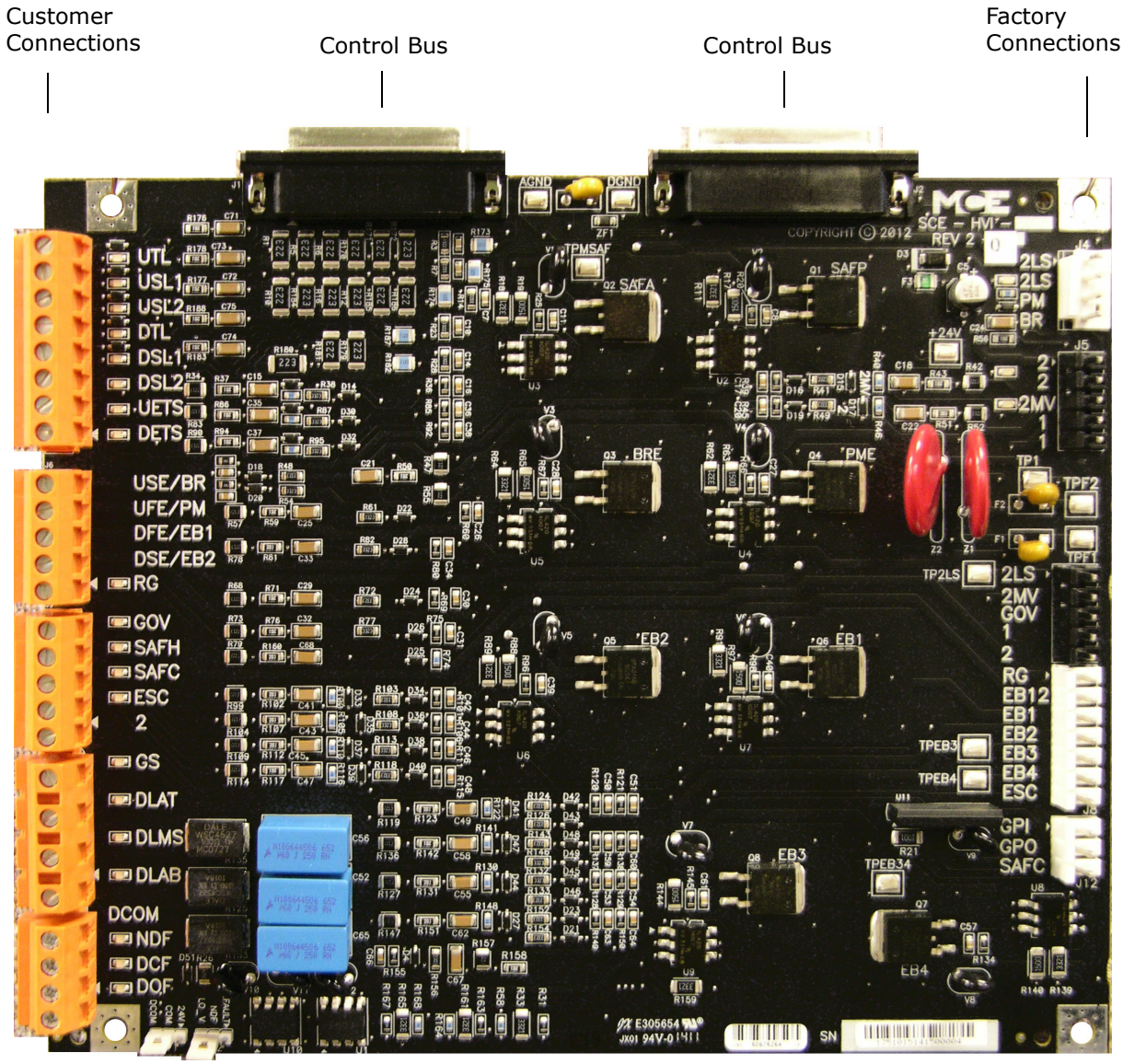

Table 2.10 HVI Connector Assignments

Connector	Assignment	Description
J3	UTL	Up Terminal Limit input, lighted when switch is closed
J3	USL1	Up Slow Limit 1 input, lighted when switch is closed
J3	USL2	Up Slow Limit 2 input, lighted when switch is closed
J3	DTL	Down Terminal Limit input, lighted when switch is closed
J3	DSL1	Down Slow Limit 1 input, lighted when switch is closed
J3	DSL2	Down Slow Limit 2 input, lighted when switch is closed
J3	UETS	Up Emergency Terminal Switch input, lighted when switch is closed
J3	DETS	Down Emergency Terminal Switch input, lighted when switch is closed
J4, MCE	2LS	2LS 110VAC input, MCE
J4, MCE	2LS	2LS 110VAC input, MCE
J4, MCE	PM	Motor Contactor power, MCE
J4, MCE	BR	Brake Contactor power, MCE
J5, MCE	2	2 bus, 110VAC input, MCE
J5, MCE	2	2 bus, 110VAC input, MCE
J5, MCE	2MV	2MV bus, 110VAC input, MCE
J5, MCE	1	Common, MCE
J5, MCE	1	Common, MCE
J6	USE/BR	Up Slow Enable output (pulls to ground when valve is activated), active when power is on (110VAC)/BR is brake contactor output for traction application
J6	UFE/PM	Up Fast Enable output (pulls to ground when valve is activated), active when power is on (110VAC/PM is motor contactor output for traction application
J6	DFE/EB1	Down Fast Enable output (pulls to ground when valve is activated), active when power is on (110VAC)/EB1 is emergency brake output for traction
J6	DSE/EB2	Down Slow Enable output (pulls to ground when valve is activated), active when power is on (110VAC)/EB2 is emergency brake output for traction
J6	RG	Rope Gripper (Not Used in hydraulic applications)
J7, MCE	2LS	2LS bus, 110VAC
J7, MCE	2MV	2MV bus, 110VAC
J7, MCE	GOV	Governor switch
J7, MCE	1	Common
J7, MCE	2	110VAC
J8, MCE	RG	Rope Gripper
J8, MCE	EB12	Emergency Brake
J8, MCE	EB1	Emergency Brake
J8, MCE	EB2	Emergency Brake
J8, MCE	EB3	Emergency Brake
J8, MCE	EB4	Emergency Brake
J8, MCE	ESC	Emergency stop switch bypass
J9	GOV	Governor, lighted when overspeed switch is closed
J9	SAFH	Safety string Hoistway, lighted when string is made (110VAC)
J9	SAFC	Safety string Car, lighted when string is made (110VAC)
J9	ESC	Emergency Switch Car, lighted when switch is closed (110VAC)
J9	2	2bus 110VAC

Table 2.10 HVI Connector Assignments

Connector	Assignment	Description
J10	GS	Gate Switch input, lighted when string is closed (110VAC)
J10	DLAT	Door Lock Top string input, lighted when string is closed (110VAC)
J10	DLMS	Door Lock Middle String input, lighted when string is closed (110VAC)
J10	DLAB	Door Lock Bottom string input, lighted when string is closed (110VAC)
J11	DRCOM	Common voltage provided for NDF, DCF, and DOF signals. See "Door Operator Compatibility" on page 2- 49.
J11	NDF	Nudging Front
J11	DCF	Door Close Function
J11	DOF	Door Open Function
J12, MCE	GPI	*General Purpose (In)
J12, MCE	GPO	*General Purpose (Out)
J12, MCE	SAFC	Car safety string

*GPI/GPO, if used, will be shown in the prints for the job. They may be used for cycle testing or for other purposes.

Table 2.11 HVI Testpoints

TP	Use
AGND	Analog ground
DGND	Digital ground
TPMSAF	MSAF monitor voltage
+24V	+24V
TP1	Common
TP2LS	2LS Bus
TPEB3	Emergency brake
TPEB4	Emergency brake
TPEB34	Emergency brake

Door Operator Compatibility Typically, the voltage used for J11, front door Nudging, Door Close, and Door Open outputs is the voltage connected from an external reference to J11 DCOM (usually from the door operator itself - according to your job prints). This configuration may be changed through SCE-HVI board jumper JP1. The Nudging output may also be independently configured through jumper JP2.

Table 2.12 Door Operator Signal Control

Jumper Setting	Result
JP1 COM to DCOM	The J11 connector control voltages are the same as the voltage at DCOM.
JP1 COM to 24V	The J11 connector control voltages are set to +24V. This jumper may be used rather than connecting 24V to the DCOM connection.
JP2 NDF to DEFAULT	The Nudging voltage is the same as the voltage selected by JP1.
JP2 NDF to LO_V	12V Nudging to door operator.

SCE-UPD

The SCE-UPD board provides power distribution to various boards and components.

Figure 2.3 SCE-UPD Board

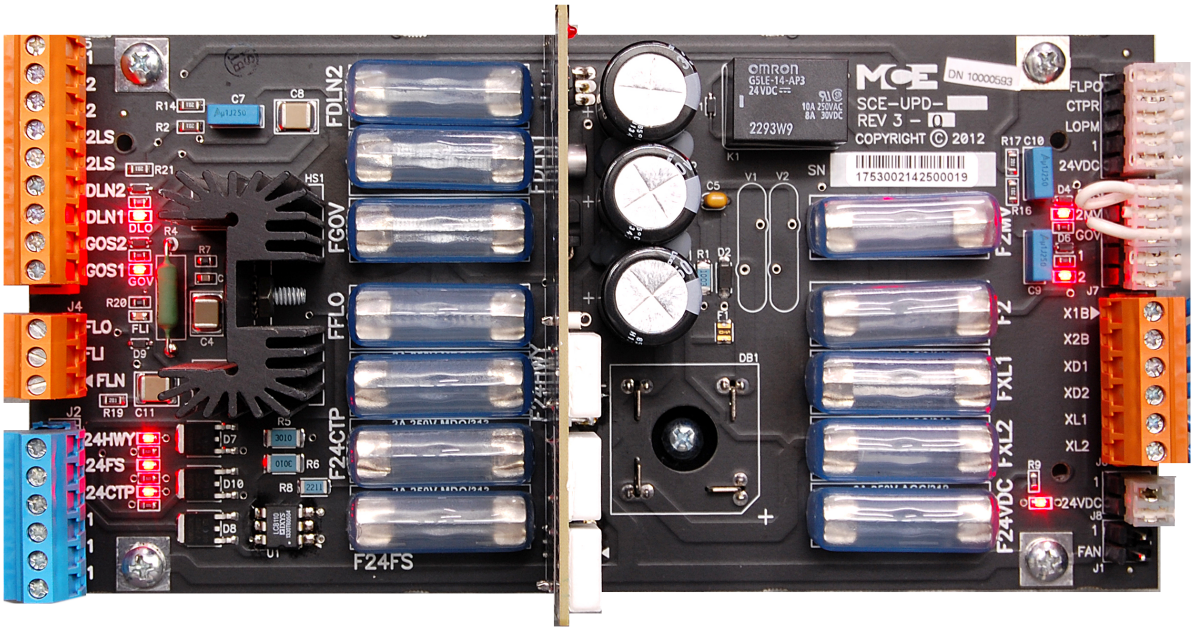

Table 2.13 UPD Connector Assignments

Connector	Assignment	Description
J1	1	Common
J1	FAN	120VAC supply
J2	24HWY	24V hoistway supply
J2	24FS	24V hoistway supply
J2	24CTP	24V cartop supply
J2	1	Common (x3 pins)
J3	FLPC	Fan/light power control input from SCE-CPU
J3	CTPR	24V CTPWR power relay, 24CTP/24HWY
J3	LOPM	Monitor, loss of 24VAC from transformer (24VDC supply)
J3	1	Common
J3	24VDC	24VDC supply
J4	FLN	120VAC lighting/fan power output neutral
J4	FLI	120VAC lighting/fan power output
J4	FLO	Fan, Light control to cartop
J5	1	Common
J5	2	Primary 120VAC bus
J5	2	Primary 120VAC bus
J5	2LS	120VAC, locks and safeties made
J5	2LS	120VAC, locks and safeties made
J5	DLN2	Fused line output to door operator
J5	DLN1	Fused line output to door operator

Table 2.13 UPD Connector Assignments

Connector	Assignment	Description
J5	GOS2	Governor overspeed circuit
J5	GOS1	Governor overspeed circuit
J6	X1B	Common from transformer
J6	X2B	120VAC from transformer
J6	XD1	L1 input (or LA from HAPS unit)
J6	XD2	L2 input (or LB from HAPS unit)
J6	XL1	20VAC input from transformer
J6	XL2	20VAC input from transformer
J7	2LS	120VAC, locks, safeties made
J7	2MV	120VAC monitor voltage
J7	GOV	120VAC for governor overspeed switch
J7	1	Common
J7	2	120VAC Bus
J8	1	Common
J8	24VDC	Fused 24VDC output

Table 2.14 UPD Bus Protection

Bus	Use	Fuse
FDLN2	Door operator	4A, 250V Bussman MDQ/Littelfuse 313
FDLN1	Door operator	4A, 250V Bussman MDQ/Littelfuse 313
FGOV	Governor	4A, 250V Bussman MDQ/Littelfuse 313
FFLO	120VAC car lighting and fan	6A, 250V Bussman AGC/Littelfuse 312
F24FS	24V, Fire Signal	2A, 250V Bussman MDQ/Littelfuse 313
F24HWY	24VDC hoistway	2A, 250V Bussman MDQ/Littelfuse 313
F24CTP	24VDC cartop	2A, 250V Bussman MDQ/Littelfuse 313
F2MV	120VAC monitor	3A, 250V Bussman MDQ/Littelfuse 313
F2	120VAC Bus	2A, 250V Bussman AGC/Littelfuse 312
FXL1	20VAC transformer	10A, 250V Bussman AGC/Littelfuse 312
FXL2	20VAC transformer	10A, 250V Bussman AGC/Littelfuse 312
F24VDC	24VDC to SCE-CPU	6A, 250V Bussman AGC/Littelfuse 312

Event and Fault Message Descriptions

The following list of Events will most often reference computer flags monitored by the various processors. When reading the event description, take note of the flags listed. We recommend that you look to the prints to locate the referenced flags. For example, the OBD (on board display touch screen) may display MSAF Input Failure. The Event description asks that we use the diagnostics to verify the status of 2MV, SAFP, and SAFB.

Following the above example, look at page 5 of the wiring prints. In the left margin is a symbol with the name M2MV. A left pointing symbol is an input. Note that there is a smaller text block that reads SPB. This smaller block indicates that Safety Processor B monitors this input. The next step is to take a look at Safety Processor B diagnostics using the OBD tab labeled SPB DIAG.

- Touch tab SPB DIAG.
- Select SPB INPUTS.
- Scroll to the M2MV.B flag.

We often notate this process using the following sequence: SPB DIAG > SPB Inputs > M2MV.B.

Again using the given example and looking at flag M2MV.B; if the associated flag has an illuminated “LED”, we expect the input to be ON. In this case, we would expect to find 120VAC on the SCE-HVI board IDC terminal labeled 2MV. Conversely, if the LED was off, we would expect to find zero volts on the IDC. (IDC stands for an Insulation Displacement Connector as opposed to a screw terminal.)

Input Mismatch Faults: During safety redundancy checking, Safety Processors and the PLD will compare the states of safety related inputs. If there is a mismatch, a fault will be issued, i.e., “DLT Input Mismatch.” In the following table, these are grouped together as a “’nnn’ Input Mismatch in the first listing. “nnn” Redundancy Faults are likewise grouped in the second table listing.”

Table 2.15 Touch Screen Event Listings

Event	Description
2 Bus is Low (131)	2 Bus (120VAC) monitoring input is low. Cannot be bypassed. 1. Check fuse F2 on SCE-UPD board. 2. Verify 120VAC across terminals X1B and X2B on the SCE-UPD.
A/B/PLD DLAB Mismatch (190)	Traction Only. The DLAB signals seen by the SPA, SPB, and PLD do no match. 1. Possible problem with the physical input to SPA, SPB or PLD. 2. Possible communication problem between SPA and PLD. 3. Possible communication problem between SPA and SPB.
A/B/PLD DLAT Mismatch (188)	Traction Only. The DLAT signals seen by the SPA, SPB, and PLD do no match. 1. Possible problem with the physical input to SPA, SPB or PLD. 2. Possible communication problem between SPA and PLD. 3. Possible communication problem between SPA and SPB.
A/B/PLD DLMS Mismatch (189)	Traction Only. The DLMS signals seen by the SPA, SPB, and PLD do no match. 1. Possible problem with the physical input to SPA, SPB or PLD. 2. Possible communication problem between SPA and PLD. 3. Possible communication problem between SPA and SPB.

Table 2.15 Touch Screen Event Listings

Event	Description
Alive Input Low (387)	The controller has detected that the Alive input from the other car in a duplexed pair has gone low, indicating the other car is no longer operating properly.
Aux Power: Complete (52)	The car has completed lowering/recall under auxiliary power (HAPS/TAPS). Cannot be bypassed. System Verifies: - Aux Power Data = APS Recall Done - APS Done output true **Correction**: 1. If in error, verify the status of the spare input programmed for APS.
Aux Power: Fail (53)	The car has failed to recall under auxiliary power. Fault-bypassed in Construction/Inspection. System Verifies: - Aux Power Data = APS Recall Fail **Correction**: 1. Verify car is not obstructed. Verify doors closed. 2. Check function of HAPS or TAPS unit.
Aux Power: FireI (50)	The car is in fire recall mode and on auxiliary power. Cannot be bypassed. System Verifies: - State of fire recall input - Aux Power Data = APS Fire Recall On - Mode of operation is not OpModeFireII **Correction**: 1. If in error, verify the status of the fire recall related inputs.
Aux Power: FireII (51)	The car is on in-car firefighter mode and is recalling on auxiliary power. Cannot be bypassed. System Verifies: - Aux Power Data = APS Fire Recall On - Mode of operation = Fire II **Correction**: 1. If in error, verify the in-car firefighter switch wiring.
Aux Power: Recall (49)	The car is recalling under auxiliary power, i.e., a battery powered lowering device. Cannot be bypassed. System Verifies: - State of input - Aux Power data = APS Recall On **Correction**: 1. If in error, verify no input programmed for this function. 2. Otherwise, verify status of input and input device. 3. Verify input wiring.
BBRAM Read Error (263)	Battery Backed RAM read error detected. Cannot be bypassed. **Correction**: 1. Cycle power and recheck.
BBRAM Write Error (262)	Battery Backed RAM write error detected. Cannot be bypassed. **Correction**: 1. Cycle power and recheck.
Bootload Switches On (434)	Informational. **Correction**: 1. If in error, verify SCE-CPU DIP SW5 switches are in off (left) position.

Table 2.15 Touch Screen Event Listings

Event	Description
Bottom Deviation (Edge) (220)	LS-EDGE-EL encountered terminal magnets that do not match learned positions. Fault bypassed in Construction/Inspection. System Verifies: - Learned versus current-read magnet locations do not match within an acceptable tolerance. **Correction**: 1. Verify magnets for terminals have not been changed. 2. Relearn terminal magnets location by performing a hoistway learn.
BR Failed to Turn Off (256)	Traction Only. Brake contactor failed to open. Cannot be bypassed.
BR Failed to Turn On (257)	Traction Only. Brake contactor failed to close. Fault bypassed in Construction/Inspection.
Brake Pick SW-Dropped (435)	Traction 0nly. Issued if brake pick switch is not in expected position after an attempt is made to pick the brake. Performed only upon intent to move. If BRAKE SW input is selected, when brake is picked, pick switch must open the input terminal within three seconds. If BRAKE SW-C input is selected, when brake is picked, pick switch must ground the input terminal within three seconds. If not, car will stop at the next floor after fault detection. If this fault occurs three times in succession, a latched fault will be generated. **Correction**: 1. Verify CONFIG 01 > CONFIGURE SPARE INPUT selected. 2. Verify switch mounting, function, and wiring.
Brake Pick SW-Flaky (436)	Traction 0nly. Issued if brake pick switch leaves correct position after brake has been picked. Performed only upon intent to move. If BRAKE SW input is selected, after the brake is picked, the brake pick switch must maintain a disconnected input terminal for at least 1 second. If BRAKE SW-C input is selected, after the brake is picked, the brake pick switch must maintain a connected input terminal for at least 1 second. If not, the car will stop at the next floor after fault detection. If this fault persists, an Excessive Faults event will be declared. **Correction**: 1. Verify CONFIG 01 > CONFIGURE SPARE INPUT selected. 2. Verify switch mounting, function, and wiring.
Brake Pick SW-Lifted (244)	Traction 0nly. Issued if brake pick switch is not in expected position before an attempt is made to pick brake. Performed only upon intent to move. If BRAKE SW input is selected, when the brake is dropped, the pick switch must ground the input terminal within three seconds. If BRAKE SW-C input is selected, when brake is picked, pick switch must open the input terminal within three seconds. If not, car will be prevented from starting. If this fault occurs three times in succession, a latched fault will be generated. **Correction**: 1. Verify CONFIG 01 > CONFIGURE SPARE INPUT selected. 2. Verify switch mounting, function, and wiring.
BRFLT is On (233)	Traction Only. The BRFLT input to the SCE-CPU board is high. Cannot be bypassed.
BRP Failed to Turn Off (248)	Traction Only. NC auxiliary contact for BR contactor failed to drop out. When idle, this input should be at 24VDC Fault-bypassed in Construction. **Correction**: 1. Check BRP IDC terminal on SCE-CPU board for 24VDC. When BR contactor is dropped, BRP should go low.

Table 2.15 Touch Screen Event Listings

Event	Description
BRP Failed to Turn On (249)	Traction Only. NC auxiliary contact for BR contactor failed to open. When idle, this input should be activated. Fault-bypassed in Construction. **Correction**: 1. Check BRP screw terminal on SCE-CPU board for 24VDC. When BR contactor is picked, BRP should go low.
Capture Mode (4)	Controller in Capture Mode. The elevator will not accept hall calls but will answer car calls. Intent is to service existing passengers until car is idled at a floor and available for maintenance or test. Fault bypassed in Construction/Inspection. System Verifies: - Mode of operation = Capture **Correction**: 1. Check that the Test switch is not in the Pretest position.
Car Calls Disabled (353)	Car calls have been disabled. Typically caused by car operation in a mode or during a fault condition in which car calls are not active. **Correction**: 1. If in error, check Home screen to see what mode of operation is displayed and if any faults are displayed. 2. Troubleshoot the active mode and/or fault condition.
Car Delayed Door Closed (319)	The car has been delayed in answering a registered call while the doors are closed. Informational. Fault-bypassed in Construction. **Correction** - 1. Check the Car Delayed Timer setting. It might be too short. 2. Check for any faults that might be preventing the car from moving in a timely manner.
Car Delayed Door Open (39)	The car has been delayed in answering a registered call while the doors are open. Informational. Fault-bypassed in Construction. **Correction** - 1. Check the Car Delayed Timer setting. It might be too short. 2. Check for any faults that might be preventing the car from moving in a timely manner.
Car Hold (445)	The car is on hold and not allowed to move. Used for the EMS Hold function initiated when the car is on in-car EMS mode and the in-car EMS switch is deactivated while the car is away from the EMS floor.
Car Stop SW Bypassed (310)	The car stop switch is being bypassed. Normally due to PH1 Fire.
Car Stop SW On (2)	Car stop switch input active. If moving, the car will perform an emergency stop. Doors will not be allowed to move. The event will end when the switch is returned to the off position. **Correction**: 1. If in error, troubleshoot the SAFC input and the switch.
Car Stop SW on Re-Level (318)	Car stop switch activated during releveling. Car will complete releveling. Doors remain operational. Informational event. Resets when switch returned to Off position.
Cartop Construct/Bypass (316)	Car Panel inspection is active and one or both of the Car/Hoistway Door Bypass switches is in the Bypass position. Cannot be bypassed. System Verifies: - ModeofOperation = OpModeInspectionBPCP **Correction**: 1. Turn off one or both of the Car/Hoistway Door Bypass switches.

Table 2.15 Touch Screen Event Listings

Event	Description
Cartop Construction (55)	The car is on construction operation and is being operated from the car-top inspection station. Cannot be bypassed. System Verifies: - Mode of Operation = Construction CT **Correction**: 1. Exit construction operation (Construction Operation on page 1-8).
Cartop Insp./Bypass (127)	Cartop inspection is active and one or both of the Car/Hoistway Door Bypass switches is in the Bypass position. Cannot be bypassed. System Verifies: - ModeofOperation = OpModeInspectionBPCT **Correction**: 1. Turn off one or both of the Car/Hoistway Door Bypass switches.
Cartop Inspection (59)	The car is on Cartop Inspection mode. Cannot be bypassed. System Verifies: - Mode of Operation = Inspection CT **Correction**: 1. If in error, verify cartop inspection inputs. 24VDC at INCT disables car top inspection.
CDB Switch Fault (328)	Generated when the CDB and CDBO inputs are in the same state indicating a possible failure of the car door bypass switch. **Correction**: 1. Toggle the car door bypass switch and verify that the diagnostic LEDs for the switch also toggle (CDB, CDBO). PLD Inputs, screen 1. 2. Verify that the CDBTST jumper is inserted in the OFF position.
Cell Battery Volts Low (374)	Low SCE-CPU battery voltage. Battery backs-up run time parameters. Informational. Replace battery.
CFG Err: 2-Stop Config (268)	Generated when a car is set to be a two stop installation and the CONFIG terminal is low (0V). Alternatively, when the car is set to be more than two stops and the CONFIG terminal is high (+24V). Also generated if both the CONFIG terminal and the DLMS terminal are high (+24V).Cannot be bypassed. **Correction**: 1. Verify top and bottom floor settings in the Building Setup menu. 2. Check voltage at the CONFIG terminal matches the settings. 3. Check voltage at the DLMS terminal matches settings.
CFG Err: Car Panel Insp (269)	User defined car panel inspection settings and car panel inspection hardware configuration do not match. Cannot be bypassed. **Correction**: 1. Verify touch screen settings against job prints. 2. Verify actual installation against job prints.
CFG Err: Controller Type (267)	The user defined controller type (Traction/Hydraulic) does not match the hard wired default at SCE-CPU input TR_HY. (TR_HY at ground for traction applications; TR_HY at 24VDC for hydraulic applications.) Cannot be bypassed. **Correction**: 1. Verify correct controller type on touch screen (CONFIG 01 > Building Setup > Controller Type). 2. Verify state of SCE-CPU board TR_HY input (IDC, upper right edge of SCE-CPU board). If not in accordance with description above, contact MCE.

Table 2.15 Touch Screen Event Listings

Event	Description
CFG Err: Hoist. Access (270)	User defined hoistway access settings and the access hardware configuration do not match. Cannot be bypassed. **Correction**: 1. Hoistway access option set to disabled and one of the access inputs (INA, ATU, ATD, ABU, ABD) is active. 2. Hoistway access option set to bottom and one of the top access inputs (ATU, ATD) is active. 3. Hoistway access option set to top and one of the bottom access inputs (ABU, ABD) is active.
CFG Err: Invalid Floor (426)	An invalid floor has been programmed.
CFG Err: Landing System (427)	Configured and actual landing system do not match.
Commercial Power Loss (381)	Appears in the event log if commercial power is lost. Informational.
Compliance Test Active (419)	A compliance/safety test has been initiated but is not yet completed. **Correction**: 1. Complete or abort the test.
Construction Invalid (98)	Car is in construction operation but controller switches or inputs are in states not valid in construction operation. If stopped, the car will not leave the floor. If in motion, the car will stop at the next floor and shut down. The fault must be manually cleared before operation resumes. Cannot be bypassed. System Verifies: - Mode of Operation = Construction Invalid **Correction**: 1. To exit construction operation see Construction Operation on page 1-8.
Contract Ovrspd (231)	Traction Only. Controller has detected contract overspeed. Power will be removed from brake and motor to bring the car to an immediate halt. The car will then move at correction speed to the nearest floor, cycle its doors to release passengers, then shut down. A manual reset is required to restore operation. Cannot be bypassed.
Copying Files to USB (440)	Files are being copied from the USB drive to the SD-RAM card.
CP Ins Stuck Input (92)	Car Panel Inspection Enable, Up, and Down inputs are monitored in all modes of operation. This fault is asserted if any of the three is high when the car is on Automatic mode or is detected as stuck during Inspection mode. This fault does not affect car behavior on Inspection mode. On Automatic modes, the car is allowed to answer its first call. The CP Ins Stuck Input Flt is then asserted if the car is already at a floor or has reached a floor. See description below. Fault-bypassed in Construction. **Correction**: 1. Check all car panel inspection related inputs, switches, and wiring (SCE-CPU ICEN, ICPU, and ICPD).
CP Ins Stuck Input Flt (93)	A stuck Car Panel Inspection input has been asserted (see description above) and the car is already at a floor or has reached a floor. The doors open to release passengers and the car removes itself from service. Fault bypassed in Construction mode. **Correction**: 1. Check all car panel inspection related inputs, switches, and wiring (SCE-CPU ICEN, ICPU, and ICPD).

Table 2.15 Touch Screen Event Listings

Event	Description
CT Ins Stuck Input (90)	Cartop inspection Enable, Up, and Down inputs are monitored in all modes. This fault is asserted if any of the three is high when the car is on Automatic mode or is detected as stuck during inspection mode. This fault does not affect car behavior on inspection mode. On automatic modes, the car is allowed to answer its first call. The CT Ins Stuck Input Flt is then asserted if the car is already at a floor or has reached a floor. (See description below.) Fault-bypassed in Construction. **Correction**: 1. Check all Car Top Inspection related inputs, switches, and related wiring (SCE-CPU CTEN, ICTU, and ICTD).
CT Ins Stuck Input Flt (91)	A stuck Cartop Inspection input has been asserted (see above) and the car is already at a floor or has reached a floor. The doors open to release passengers and the car removes itself from service. Fault bypassed in Construction mode. **Correction**: 1. Verify switches and wiring on SCE-CPU inputs CTEN, ICTU, and ICTD.
Cycle Test - "nnn"	nnn = ESC (293), INA (296), INCP (297), INCT (295), M2L (300), MRIN (298), MASF HIGH (299), MASF LOW (309), PLD COMM (308), PLD ESC (301), PLD INA (304), PLD INCP (305), PLD INCT (303), PLD MRIN (306), PLD SAFC (302), SAFC (294), SPB COMM (307) Before departing a floor, code requires safety related inputs be tested to ensure they are in the proper state. If an error is found, a Cycle Test fault specific to the problem input will be displayed. Fault-bypassed in Construction/Inspection. **Correction:** 1. Verify installation, condition, and connections for the specified equipment.
Cycle Test M2L (300)	Reset fault. Go to PLD Diag > PLD Inputs; view flag M2L. Place a call for a landing. M2L must turn off when doors open and stay off until door locks are reestablished. If doors are operating properly, SCE-HVI board may be faulty.
Cycle Test MSAF High (299)	Reset fault. Go to SPB DIAG > SPB Inputs: View flag MSAF B. Place a call for a landing. MSAF B must turn off when doors open and stay off until door locks are reestablished. If doors are operating properly, SCE-HVI board may be faulty.
DBRTF Shutdown (ID 472)	**Dynamic Braking IGBT Fault (DBRTF)** **Description:** Drive brake transistor failed. K1/K2 circuit is open. **Correction**: 1. Check the drive or starter for fault indication and troubleshoot. 2. Once the fault condition is cleared, reset the fault by activating the Machine Room inspection and pressing the Fault Reset button for 5 seconds.
DFE/EB1 Stuck Off (144)	Down Fast Enable or emergency brake outputs remain off when commanded to be active. No bypass in any mode. **Correction**: 1. Verify emergency brake output is correctly connected. 2. Verify function of emergency brake unit.
DFE/EB1 Stuck On (143)	DFE/EB1 reset issued but outputs remain on. No bypass in any mode. **Correction**: 1. Verify emergency brake output is correctly connected. 2. Verify function of emergency brake unit.

Table 2.15 Touch Screen Event Listings

Event	Description
DFLT is On (140) or (417)	Drive has faulted. Not generated in construction operation. Fault bypassed in Construction/Inspection. 1. Verify status of DFLT input. 2. Check drive for fault indication and troubleshoot.
Dispatch Load (48)	The car load has surpassed the designated load point for lobby departure. Car will automatically prepare to leave the lobby floor. This is not a normally supported input and should not appear unless the installer has configured a spare input to support it and the load weigher used supports this function. Fault-bypassed in Construction. System Verifies: - Status of input. - Load Data = Load Dispatch **Correction:** 1. If in error, verify no input is programmed for this function. 2. Otherwise, verify state of input and input device. 3. Calibrate load weigher. 4. Verify input wiring.
Dispatcher Comm Loss (384)	The dispatching controller has lost CAN communication with the other controller in a duplexed pair.
Door Faults Information: **Flag Definitions** - DOL Door Open Limit, DPM Door Position Monitor, GS Gate Switch (car door lock), DLAB Door Lock Access Bottom, DLAT Door Lock Access Top, DLMS Door Lock Mid String, DCL Door Close Limit. **Normal Open State:** DOL=0=DPM=GS=(DLAB/DLAT/DLS depending on car location), DCL=1. **Normal Closed State**: DOL=1=DPM=GS=DLAB=DLAT=DLMS, DCL=0.	
DLAB Open-Running (337)	The bottom door lock string was not made during a run. The car will make an emergency stop. **Correction:** 1. Verify DLAB input electrically and mechanically. 2. Trouble shoot door lock string.
DLAT Open-Running (339)	Asserted if the top floor door lock string is not made during a run. The car will make an emergency stop. **Correction:** 1. Verify DLAT input electrically and mechanically. 2. Trouble shoot lock string.
DLMS Open-Running (338)	Asserted if the middle door lock string is not made during a run. The car will make an emergency stop. **Correction:** 1. Verify DLMS input electrically and mechanically. 2. Trouble shoot lock string.
DOB Bypass (36)	The Door Open Button is stuck. Fault-bypassed in Construction/Inspection. **System Verifies:** - Door Flags, Stuck DOB Timer = Elapsed - Door Flags, DOB Bypassed and DOB Failed are not true. **Correction:** 1. Verify input and switch. 2. See if continuously active on System IO/Programmed Inputs, DOB.
DOB Fail (37)	The door open button has failed. Fault-bypassed in Construction. **System Verifies:** - Door Flags = DOB Failed **Correction:** 1. Verify DOB switch and wiring. 2. Verify door operator functioning properly.

Table 2.15 Touch Screen Event Listings

Event	Description
DOL Low - DCL Low (325)	Door open and close limits are not made (DOL and DCL = 0). If the DOOR CONTACT FLT ENABLED option = YES, the car is shut down and the door close button is rendered inoperative as long as the fault is present (per applicable elevator safety code). If the option = NO, the fault is logged but otherwise ignored. **Correction:** 1. Check door open and close limit inputs and contacts.
DOL Low - DLAB High (334)	Car is at bottom floor with doors open but bottom door lock string is made (DOL = 0, DLAB = 1). If the DOOR CONTACT FLT ENABLED option = YES, the car is shut down and the door close button is rendered inoperative as long as the fault is present (per applicable elevator safety code). If the option = NO, the fault is logged but otherwise ignored. **Correction:** 1. Check door open limit and bottom door lock string inputs and contacts.
DOL Low - DLAT High (330)	Car is at op floor with doors open but top door lock string is made (DOL = 0, DLAT = 1). If the DOOR CONTACT FLT ENABLED option = YES, the car is shut down and the door close button is rendered inoperative as long as the fault is present (per applicable elevator safety code). If the option = NO, the fault is logged but otherwise ignored. **Correction:** 1. Check door open limit and top door lock string inputs and contacts.
DOL Low - DLMS High (332)	Car is at a floor other than top or bottom with doors open but door lock string is made (DOL = 0, DLMS = 1). If the DOOR CONTACT FLT ENABLED option = YES, the car is shut down and the door close button is rendered inoperative as long as the fault is present (per applicable elevator safety code). If the option = NO, the fault is logged but otherwise ignored. **Correction:** 1. Check door open limit and middle door lock string inputs and contacts.
DOL Low - DPM High (287 & 288)	Doors are open but DPM limit is made (DOL = 0, DPM = 1). If the DOOR CONTACT FLT ENABLED option = YES, the car is shut down and the door close button is rendered inoperative as long as the fault is present (per applicable elevator safety code). If the option = NO, the fault is logged but otherwise ignored. **Correction:** 1. Check door open and position monitoring limit inputs and contacts.
DOL Low - GS High (285)	The door open limit and car gate switch positions are conflicting (DOL = 0, GS = 1). If the DOOR CONTACT FLT ENABLED option = YES, the car is shut down and the door close button is rendered inoperative as long as the fault is present (per applicable elevator safety code). If the option = NO, the fault is logged but otherwise ignored. **Correction:** 1. Check the door open limit and car gate switch inputs and contacts.
Door Bypass Construct (315)	Machine room inspection and construction operation are active and one or both of the Car/Hoistway Door Bypass switches is in the Bypass position. Cannot be bypassed. **System Verifies:** - ModeOfOperation = OpModeConstructionBP **Correction:** 1. Exit construction operation (Construction Operation on page 1-8)

Table 2.15 Touch Screen Event Listings

Event	Description
Door Bypass Inspection (126)	Machine Room inspection is active and one or both of the Car/Hoistway Door Bypass switches is in the Bypass position. Cannot be bypassed. System Verifies: - ModeofOperation = OpModeInspectionBP **Correction:** 1. Turn off one or both of the Car/Hoistway Door Bypass switches.
Door Close Fail 1 (77) Door Close Fail 2 (78) Door Close Fail 3 (79) Door Close Fail 4 (80)	Detected for each failed attempt to close the doors at a destination floor. Cleared if the doors successfully close. Cannot be bypassed. System Verifies: - Door Flags, Door Command Data, Door Close Fail = 1 (2, 3, 4) **Correction:** 1. Check all door contacts. 2. Check for correct door operation and speed. 3. Check fuses FDLN1 and FDLN2.
Door Close Fault (15)	Doors have tried and failed to close three times. (See Door Close Fail 1 - 3.) All calls are canceled. Cleared when doors successfully close or by pressing fault reset button. Also cleared by cycling controller power or if mode of operation is changed. Fault bypassed in Construction/Inspection. System Verifies: - Door close fault flag **Correction:** 1. Check all door contacts. 2. Check fuses FDLN1, FDLN2. 3. Check for correct door operation and speed.
Door Fault Shutdown (108)	The door has failed to close after three closing cycles have been attempted. Doors will fully open and car will shut down. Fault bypassed in Construction/Inspection.
Door Hold (110)	The Door Hold input is active. Fault bypassed in Construction/Inspection. System Verifies: - Door Flags, Door Hold Data, Door Hold Function active. **Correction:** 1. If in error, check wiring (be sure that door hold timer has expired).
Door Open Fail 1 (73) Door Open Fail 2 (74) Door Open Fail 3 (75) Door Open Fail 4 (76)	Detected for each failed attempt to open the doors at a destination floor. Cleared if the doors successfully open. Cannot be bypassed. System Verifies: - Door Flags, Door Command Data, Door Open Fail = 1 (2, 3, 4) **Correction:** 1. Check all door contacts. 2. Check the user defined Open Time Limit. 3. Check for correct door operation and speed. 4. Check fuses FDLN1, FDLN2.
Door Open Fault (13)	Doors have tried and failed to open three times. (See Door Open Fail 1 - 3.) All calls are canceled. Door may be opened with constant pressure on door open button. Cleared when doors successfully open or by pressing fault reset button. Also cleared by cycling controller power or if mode of operation is changed. Fault-bypassed in Construction/Inspection. System Verifies: - Door open fault flag **Correction:** 1. Check all door contacts. 2. Check the user defined Open Time Limit. 3. Check for correct door operation and speed. 4. Check fuses FDLN1, FDLN2.

Table 2.15 Touch Screen Event Listings

Event	Description
Door Unintended Motion (253)	Traction Only. The car has drifted more than three inches from a door zone with the gate and hall doors open. The emergency brake will deploy. Fault-bypassed in Construction. Requires manual reset. **Correction:** 1. Verify proper machine brake adjustment and condition. 2. Verify counterweighting is correct for car rated load. 3. Verify door switches, contacts, and locks.
Doors Closed Not Locked (349)	Car is at a floor with doors fully closed but locks are not made. The car is prevented from starting a new run. **Correction:** 1. Check DPM, car gate switch, and all door lock strings.
DPM Low - DLK High (289 & 290)	The door position monitor switch is open but the door locks are made. If the DOOR CONTACT FLT ENABLED option = YES, the car is shut down and the door close button is rendered inoperative as long as the fault is present (per applicable elevator safety code). If the option = NO, the fault is logged but otherwise ignored. **Correction:** 1. Check door position monitoring and door lock string inputs and related circuitry. DPM should make 2 inches before locks.
DPM Open-Running (312)	Asserted if the door position monitoring switch is not made during a run. The car will make an emergency stop. **Correction:** 1. Verify DPM input parameter. 2. Verify DPM input electrically and mechanically.
DRDY is Off (139) or (416)	Drive ready input is off. Fault-bypassed in Construction/Inspection. 1. Check the drive or starter for fault indication and troubleshoot. 2. Verify DRDY output and input to SCE-CPU.
Drive RX Communication (241)	Traction Only. Serial data from SCE-CPU board to drive has failed. Cannot be bypassed. **Correction:** 1. Check connection and cable integrity from SCE-CPU board J27 to drive. 2. Use a scope to check if data is in fact being received by the drive.
Drive RX Message (243)	Traction Only. Cannot be bypassed.
Drive TX Communication (240)	Traction Only. Serial data from drive to SCE-CPU board has failed. Cannot be bypassed. **Correction:** 1. Check connection and cable integrity from SCE-CPU to drive. 2. Use a scope to check if data is in fact being transmitted from the drive.
Drive TX Message (242)	Traction Only. Cannot be bypassed.
DRO Dropped Out (449)	Traction Only: Fault is generated if DRO deactivates after it has initially activated at the beginning of movement. A latching fault occurs after 10 failures. 1. Possible problem with the physical input. 2. The drive shut off unexpectedly.
DRO Failed to Turn Off (137 or (414))	Traction Only. Drive On input failed to deactivate. Cannot be bypassed. 1. Verify drive is being properly disabled at the end of a run. 2. Temporarily disconnect the DRO wire at both ends and use a length of insulated wire between the two. If DRO deactivates properly, replace the shielded wire bundle between the SCE-CPU and the drive.

Table 2.15 Touch Screen Event Listings

Event	Description
DRO Failed to Turn On (138 or (415))	Traction Only. Drive On input to SCE-CPU board failed to activate. 1. Verify hoist motor to drive connections and voltages. Fault-bypassed in Construction/Inspection. 2. Verify that the drive is activating its DRO output.
DLS1 is Low (370)	Informational. DSL1 input is low. **Correction**: If in error, verify function of switch (if physical) and/or input.
DSL1 Position High (409)	Traction only. The car encountered the DSL1 switch at a position higher than that learned during the learn operation. **Correction**: 1. Verify position of switch (software or physical). 2. Repeat learn operation (Utils > Landing System Utilities > Terminal Switch Learn).
DSL1 Position Low (408)	The car encountered the DSL1 switch at a position lower than that learned during the learn operation. **Correction**: 1. Verify position of switch (software or physical). 2. Repeat learn operation (Utils > Landing System Utilities > Terminal Switch Learn).
DSL1 Speed High-Lower (396)	Traction only. The car was traveling faster than the learned speed upon encountering the DSL1 switch. The car will perform an emergency slow-down then proceed at correction speed to the landing. **Correction**: 1. Verify position of switch (software or physical). 2. Repeat learn operation (Utils > Landing System Utilities > Terminal Switch Learn).
DSL1 Speed High-Upper (397)	Traction only. The car was traveling faster than the learned speed plus the delta upon encountering the DSL1 switch. The car will perform an emergency stop then proceed at correction speed to the terminal. **Correction:** 1. Verify position of switch (software or physical). 2. Repeat learn operation (Utils > Landing System Utilities > Terminal Switch Learn).
DSL2 Position High (411)	Traction only. The car encountered the DSL2 switch at a position higher than that learned during the learn operation. The car will perform an emergency slowdown then proceed at correction speed to the terminal. **Correction:** 1. Verify position of switch (software or physical). 2. Repeat learn operation (Utils > Landing System Utilities > Terminal Switch Learn).
DSL2 Position Low (410)	The car encountered the DSL2 switch at a position lower than that learned during the learn operation. The car will perform an emergency slowdown then proceed at correction speed to the terminal. **Correction:** 1. Verify position of switch (software or physical). 2. Repeat learn operation (Utils > Landing System Utilities > Terminal Switch Learn).

Table 2.15 Touch Screen Event Listings

Event	Description
DSL2 Speed High-Lower (398)	Traction only. The car was traveling faster than the learned speed upon encountering the DSL2 switch. The car will perform an emergency slow-down then proceed at correction speed to the landing. **Correction:** 1. Verify position of switch (software or physical). 2. Repeat learn operation (Utils > Landing System Utilities > Terminal Switch Learn).
DSL2 Speed High-Upper (399)	Traction only. The car was traveling faster than the learned speed plus the delta upon encountering the DSL2 switch. The car will perform an emergency stop then proceed at correction speed to the terminal. **Correction:** 1. Verify position of switch (software or physical). 2. Repeat learn operation (Utils > Landing System Utilities > Terminal Switch Learn).
DTL and USLx Are Low (314)	The Down Terminal Limit switch and the named Up Slow Limit are both low (open); both cannot be low at the same time. The car will stop at the next floor, cancel all calls, cycle doors to allow passengers to exit, and will not be allowed to move. Fault-bypassed in Construction. **System Verifies:** - Limit inputs DTL and USL low. - 2 bus has power. **Correction:** 1. Verify switches mechanically and electrically. 2. Verify input connections. 3. View touchscreen landing system flags for correct status. 4. Repeat learn operation (Utils > Landing System Utilities > Terminal Switch Learn).
DTL is Low (155)	The Down Terminal Limit switch has opened. If moving down, the car will perform an emergency stop. This switch should not open unless the car overshoots the terminal and opens the switch. The open switch prevents further movement towards the terminal. Cannot be bypassed. **System Verifies:** - 2 bus has power. - DTL input is low. **Correction:** 1. If in error, verify switches and connections mechanically and electrically. 2. Use System Diag > Landing System to check the state of the switch. 3. Repeat learn operation (Utils > Landing System Utilities > Terminal Switch Learn).
Duplicate Car ID (379)	Same ID has been assigned to more than one car. Event is informational.
Duplicate Dispatcher (382)	Both cars in a duplex have been assigned the dispatcher role.
DZF Output Fault (Edge) (215)	Measured DZ and the 24VDC discrete DZ do not match. Fault-bypassed in Construction/Inspection. **System Verifies:** - LS-EDGE-EL is the selected landing system. **Correction:** 1. Check for back-fed wires at the cartop board. 2. When reader is sensing a DZ magnet (DZ LED on the reader is on), there should be 24VDC at the DZ terminal. 3. Conversely, there should be about 0VDC at the DZ terminal when reader is not sensing DZ.

Table 2.15 Touch Screen Event Listings

Event	Description
Earthquake Operation (418)	Logged when earthquake input is activated. Bypassed in Construction bypass operation. **Correction**: 1. Check state of inputs EQ SS and EQ CWT.
Earthquake Recall (95)	The car is being recalled on earthquake operation.
Earthquake Run (97)	The car has performed an emergency stop in response to EQ SS and/or EQ CWT input activation, has recalled, and is subsequently moving at reduced speed in accordance to the selected earthquake code. Fault-bypassed in Construction. System Verifies: - Earthquake Data = EQ Run **Correction**: 1. Press EQRST on SCE-CPU board to reset.
Earthquake Shutdown (96)	Per selected earthquake code, car has lowered to closest floor below its emergency stop position, opened its doors, and shut down. Fault-bypassed in Construction. System Verifies: - Earthquake Data = EQ Shutdown **Correction**: 1. Press EQ RST on SCE-CPU board to reset.
EB Cycle Test Fault (388)	Emergency brake failed a cycle test. Car will not be allowed to run. **Correction**: 1. Verify emergency brake I/O and power.
E-Brake Dropped (421)	Traction 0nly. The emergency brake has deployed. **Correction**: 1. Check the event log to see what messages preceded the brake drop. 2. Troubleshoot to correct the problem. 3. Press UIM reset on SCE-CPU for 8 seconds to reset the brake. 4. Press FLT RST to clear the fault.
E-Brake Failed to Drop (376)	Traction 0nly. The emergency brake/rope gripper failed to drop. The car will not be allowed to move; all calls will be canceled and the doors will be closed. Bypassed in Construction bypass operation. **Correction**: 1. Verify function of emergency brake or rope gripper. 2. If in error, verify brake position switches or monitoring contacts. 3. Verify wiring.
E-Brake Failed to Pick (375)	Traction 0nly. The emergency brake/rope gripper failed to pick. The car will not be allowed to move; all calls will be canceled and the doors will be closed. Bypassed in Construction bypass operation. **Correction**: 1. Verify function of emergency brake or rope gripper. 2. If in error, verify brake position switches or monitoring contacts. 3. Verify wiring.
E-Brake Unexpected Drop (422)	Traction 0nly. Emergency brake deployment was not the result of controller direction. **Correction**: 1. Verify RGOK connection. 2. Verify emergency brake function. 3. Reset brake (UIM reset for 8 seconds); FLT RST momentarily. 4. Monitor brake function.

Table 2.15 Touch Screen Event Listings

Event	Description
Emergency Dispatch (125)	Hall call bus has failed and car is operating on emergency dispatching to continue service to building. Fault-bypassed in Construction/Inspection. Check OBD for message: 3HN comm loss or Emergency dispatch input (EM DISP) activated. System Verifies: - Emergency Dispatch Data = Emerg Dispatch **Correction**: 1. Verify hall call functionality. 2. Verify EM DISP input; System IO > Programmed Inputs (must be assigned to a valid input)
EMS In Car (444)	Car has completed recall to EMS floor and medical personnel have activated the EMS switch in the car.
EMS Recall (441)	Emergency medical service has been initiated. **Correction**: 1. If in error, check EMS input. 2. If EMS service has not been activated, verify that no input has been programmed for the EMS function.
EP Comm/Config Shutdown (380)	Emergency power in effect with dispatching communications lost. Car will shut down. Cannot be bypassed. **Correction**: 1. Check Config 03 > Emergency Power > Emergency Power Type. If set to None, check that no spare input has been programmed as EPI. If set to Dispatcher or Overlay, check that there is a spare input programmed as EPI.
EP Recall (20)	Emergency power is available and the recall process has been initiated. Cannot be bypassed. System Verifies: - EP Data Status = EP Recall - EPI flag = 1 for normal operation (active low logic) **Correction**: 1. If in error, check System IO > Programmed Inputs > EPI status.
EP Recall Complete (22)	Car has completed recall to designated recall floor. Cannot be bypassed. System Verifies: - EP Data Status = EP Recall Done
EP Recall Fail (23)	Emergency power recall has been initiated but the car has failed to recall. Cannot be bypassed. System Verifies: - EP Data Status = EP Recall Fail **Correction**: 1. Check that car is on automatic operation with no active faults.
EP Recall ISV (21)	The car is moving toward the recall floor under emergency power. Cannot be bypassed. System Verifies: - EP Data Status = EP Recall ISV **Correction**: 1. Check EPI status on SPA Diag > Emerg Pwr and Earthquake. 2. EPI input terminal must be 0V for normal operation.
EP Recall Next Floor (385)	Emergency power is available and a recall to the next floor has been initiated. Cannot be bypassed. **Correction**: 1. If in error, check System IO > Programmed Inputs > EPI status.

Table 2.15 Touch Screen Event Listings

Event	Description
EP Run (24)	The car has been selected to run under emergency power. Cannot be bypassed. System Verifies: - EP Data Status = EP Run **Correction**: 1. If in error, check that the EP Run has not been erroneously assigned to an input or, if a valid input has been assigned, verify the electrical state of that input and that it is wired correctly. 2. Verify EP Auto (System IO > Programmed Inputs).
EP Shutdown (19)	Normal power has been lost and the car is stopped. The car will remain stopped until backup power becomes active or commercial power is restored. System Verifies: - EP Data Status = EP Shutdown **Correction**: 1. If in error, check status of System IO > Programmed Inputs, EPI. 2. Verify EPI not programmed if not used. 3. If used, verify EPI wiring per job prints.
EQ Emergency Stop (94)	Earthquake inputs EQ SS or EQ CWT have been activated and the car has performed an emergency stop. Further operation will be per the selected earthquake code. Fault-bypassed in Construction. System Verifies: - Earthquake Data = EQ Stop **Correction**: 1. Verify System IO > Programmed Inputs, EQ SS or EQ CWT.
ESC Input Low (162)	The in-car emergency stop switch bypass input is low. If moving, the car will perform an emergency stop. The doors will not operate. System Verifies: - ESC input is low **Correction**: 1. If in error, verify input and input device electrically and mechanically. 2. Verify status System IO > System Inputs ESC.
Ethernet Error (251)	Monitoring processor cannot communicate with the Ethernet chip. Cannot be bypassed. **Correction**: 1. Verify Ethernet connection. 2. Verify Ethernet settings (Config 03 > Network Settings). 3. Reset processor SPC (RSTC button on SCE-CPU board).
Event Log Cleared (228)	Message will appear momentarily when event log is cleared through the touch screen. System Diag > Event Log > Clear.
Event Log Write Fail (167)	Occurs if the SPC processor tries to write an event to the SD card but cannot. Car runs normally. **Correction**: 1. Verify SD card is installed; eject and reseat. 2. Clear the event log.

Table 2.15 Touch Screen Event Listings

Event	Description
Excessive Faults (129)	Generated when there are more than ten faults that resulted in an emergency, controlled or ASAP stop. The counter resets if the car makes ten normal runs without faults. The car is taken out of service and all registered calls are canceled. The car will proceed to the next available floor and cycle the doors to let the passengers out. Once at a floor, the "Excessive Faults Shutdown" fault is activated and the car will remain shut down until the Fault Reset button is pressed, Inspection is toggled or power to the controller is cycled. Fault-bypassed in Construction/Inspection. **Correction**: 1. Access the event log and determine which recent events triggered the fault. 2. Troubleshoot those faults to prevent their recurrence.
Fire Bypassed (120)	Detected when fire service is activated but car cannot perform fire recall due to certain conditions (Inspection, Test, or Independent Service mode active). Cleared as soon as conditions preventing fire recall are cleared. Cannot be bypassed. **Correction**: 1. Check the current mode of operation and verify that the operation is per the selected user defined fire code.
Fire II (25)	Fire Phase II, in-car firefighter operation, is active. Cannot be bypassed. System Verifies: - Mode of Operation = Fire II **Correction**: 1. If in error, verify in-car fire fighter switch mechanically and electrically. 2. Verify status of System IO > Programmed Inputs > FR2 ON. 3. Verify FR2 ON input is not shorted.
Fire II Hold (17)	In-car fire fighter switch is in HOLD position. Cannot be bypassed. System Verifies: - Mode of Operation = Op Mode Fire II - Fire Data = FIRE II HOLD **Correction**: 1. If in error, verify in-car fire switch mechanically and electrically. 2. Verify correct wiring per job prints. 3. Verify status of FR2 HOLD flag at System IO > Programmed Inputs.
Fire II Recall (26)	The doors are closed, the in-car fire switch is off and the car is recalling to the recall floor. Cannot be bypassed. System Verifies: - Mode of Operation = Fire Recall **Correction**: 1. If in error, verify programmed Input System IO > Programmed Inputs > FR2 ON.
Fire Recall Alt (28)	The car is recalling to the alternate fire recall floor. At the floor, the car will behave as configured. Cannot be bypassed. System Verifies: - Mode of Operation = Fire Recall Alt **Correction**: 1. If in error, verify operation of fire/smoke sensors on main recall floor. 2. Verify sensors wired according to job prints. 3. Verify System IO > System Input > FRA = on for normal.
Fire Recall Done (54)	The car has completed recall to the designated floor. Cannot be bypassed. System Verifies: - Fire Data = Recall Complete

Table 2.15 Touch Screen Event Listings

Event	Description
Fire Recall Main (27)	The car is recalling to the main fire recall floor. At the floor, the car will behave as configured. Cannot be bypassed. System Verifies: - Mode of Operation = Fire Main **Correction**: 1. If in error, verify operation of fire/smoke sensors on floors other than main recall floor. 2. Verify sensors wired according to job prints. 3. Verify System IO > System Inputs, FRM.
Fire Recall: FR1 On (343)	Fire recall initiated by the main fire recall switch (SCE-CPU FR1 ON input active low). Car recalls to the designated fire floor (usually the lobby). **Correction**: 1. Verify System IO > Programmed Inputs > FR1 ON = Off for normal.
Fire Recall: FR1 On2 (344)	A spare input programmed for the FR1 ON2 has been activated. **Correction**: 1. Verify spare input programming. 2. Check terminal associated with input.
Fire Recall: FRA (345)	Fire recall initiated by fire sensors in the lobby. SCE-CPU FRA input low. Car recalls to the alternate fire floor. **Correction**: 1. Verify System IO > System Inputs > FRA = On for normal.
Fire Recall: FRS (342)	The dedicated FRS input on the SCE-CPU has been activated. **Correction**: 1. Check the main floor fire recall switch.
Fire Recall: FRSA (347)	Fire recall initiated by the fire sensors in the machine room and/or hoist-way (SCE-CPU FRSA input low). Car recalls to the alternate fire floor. **Correction**: 1. Verify System IO > System Inputs > FRSA = On for normal.
Fire Recall: FRSM (346)	Recall initiated by one or more fire sensors at floors other than the ones at the lobby (SCE-CPU FRS input low). Car recalls to the designated fire floor (usually the lobby). **Correction**: 1. Verify System IO > System Inputs > FRSM = On for normal.
Firmware Update (383)	Controller firmware has been updated.
Flood Operation (30)	Flood operation has been initiated. Cannot be bypassed. **Correction**: 1. If in error, verify no programmable Input Pit Flood is configured. 2. Verify System IO > Programmed Inputs > Pit Flood and initiating device.
Flood Recall (31)	The car is recalling to the designated flood operation recall floor. Cannot be bypassed. System Verifies: - Flood Data = Flood Recall **Correction**: 1. If in error, verify no programmable Input Pit Flood is configured. 2. Verify System IO > Programmed Inputs > Pit Flood and initiating device.

Table 2.15 Touch Screen Event Listings

Event	Description
Floor Code Invalid (311)	An invalid (out of range) absolute floor code has been detected. On a stepping landing system: Check spare inputs (R0, R1, R2, etc) to ensure they are returning valid binary floor codes. Refer to landing system drawing in controller job prints. On an LS-EDGE landing system this fault may require performing the hoistway learn procedure to re-learn the floors.
Floor Unintended Motion (252)	Traction 0nly. The car has drifted more than six inches from the landing with car and hall doors open. The emergency brake will deploy. Fault-bypassed in Construction. **Correction**: 1. If persistent, verify landing system sensors and connections. 2. Verify machine brake and counterweighting. 3. With car on inspection, press UIM RST on SCE-CPU board for 8 seconds to reset brake. 4. Press FLT RST to reset faults.
FLT BYPASS JP (264)	The fault bypass jumper on the SCE-CPU board is in the BYPASS position. Cannot be bypassed.
Flt Bypass JP: Time Out (265)	The fault bypass jumper on the SCE-CPU board is in the BYPASS position and will be effective for the duration of the countdown timer displayed. When the timer expires the system will ignore the jumper and Fault Bypass will end. If more time in fault bypass is required, cycle power to the controller to "reset" the jumper or temporarily move the jumper to the OFF position before again placing it in the BYPASS position.
GOV Input Low (164)	Traction 0nly. The governor input is low. The car will perform an emergency stop, immediately dropping motor and brake contactors. Cannot be bypassed. System Verifies: - Application is a Traction machine and the GOV input is low **Correction**: 1. If in error, verify governor and input mechanically and electrically. 2. If actual, troubleshoot for overspeed and/or check governor overspeed switch.
GS Open-Running (336)	Asserted if the car gate switch is not made during a run. The car will make an emergency stop. **Correction**: 1. Verify GS input electrically and mechanically.
Hall Calls Bypassed (355)	Hall calls are being bypassed. Typically due to heavy load status of car. **Correction**: Automatically corrected when car load allows additional passenger. 1. Verify System IO > Programmed Inputs > Load Hvy.
Hall Calls Disabled (354)	Hall calls have been disabled. Typically due to heavy load status of car. **Correction**: Automatically corrected when car load allows additional passenger. 1. Verify System IO > Programmed Inputs > Load Hvy.
HDB Switch Fault (329)	Generated when HDB and HDBO inputs are in the same state (both low or both high) indicating possible failure of Hoistway Door Bypass Switch. **Correction**: 1. Toggle hoistway door bypass switch and verify that diagnostic LEDs HDB, HDBO also toggle (System IO > System Inputs). 2. Verify HDBPTST jumper is inserted in the OFF position.

Table 2.15 Touch Screen Event Listings

Event	Description
Heavy Load (47)	The car is loaded beyond the heavy load setting. Under this condition, a moving car will ignore additional hall calls until the load is reduced by passenger departure. Fault-bypassed in Construction. System Verifies: - Status of input - Load Data = Load Heavy **Correction**: 1. If in error, verify no input is programmed for Load Hvy. 2. Otherwise, verify status of input and input device. 3. Verify input wiring. 4. Verify System IO > Programmed Inputs > Load Hvy. 5. Calibrate load weigher.
Hoist. Access Construct (58)	The car is on construction operation and hoistway access. Cannot be bypassed. **Correction**: 1. Exit construction operation (Construction Operation on page 1-8).
Hoist. Access Inspection (62)	The car is on Inspection mode and hoistway access. Cannot be bypassed. System Verifies: - Mode of Operation = Inspection HA **Correction**: 1. If in error, verify INA input.
In-Car Construct/Bypass (317)	Car panel inspection and construction operation are active and one or both of the Car/Hoistway Door Bypass switches is in the Bypass position. Cannot be bypassed. System Verifies: - ModeOfOperation = OpModeConstructionBPCP **Correction**: 1. Exit construction operation (Construction Operation on page 1-8)
In-Car Construction (57)	The car is operating in construction mode from the in-car controls.
In-Car Insp/Bypass (128)	Car Panel inspection is active and one or both of the Car/Hoistway Door Bypass switches is in the Bypass position. Cannot be bypassed. System Verifies: - ModeofOperation = OpModeInspectionBPCP **Correction**: 1. Turn off one or both of the Car/Hoistway Door Bypass switches.
In-Car Inspection (61)	The car is on Inspection mode and is being operated from the in-car inspection station. Cannot be bypassed. System Verifies: - Mode of Operation = Inspection CP **Correction**: 1. If in error, verify car panel inspection inputs.
Independent Mode (29)	The car is running on independent mode and will not accept hall calls. Cannot be bypassed. System Verifies: Mode of Operation = Independent **Correction**: 1. If in error, verify no input programmed IND SERV if IND SERV not available. 2. Verify IND SERV input and initiating device wired per job prints.

Table 2.15 Touch Screen Event Listings

Event	Description
Inspection Invalid (99)	Controller unable to establish proper mode of Inspection. Fault-bypassed in Construction/Inspection. System Verifies: - Mode of Operation = Inspection Invalid **Correction**: 1. Verify all inspection inputs mechanically and electrically.
Invalid Access Zone (369)	Car has been placed on Inspection Access but is outside the selected access zone. If in error: 1. Verify car position. 2. Verify CONFIG 02 > HOISTWAY SETUP > TOP|BOTTOM ACCESS DISTANCE. 3. Verify switch wiring.
Invalid Mode (6)	The car is in an invalid operating mode. Appears temporarily at power up and is immediately replaced with the actual operating mode. If it appeared during normal operation, a running car would perform an emergency stop and shut down. A stopped car would remain stopped and shut down. Cannot be bypassed. System Verifies: - Mode of Operation = OpModeInvalid or OpModeInspectionInvalid **Correction**: 1. Cycle power to the controller. 2. Contact MCE; possible defective SCE-CPU board.
I/O Terminal Mapping Flt (341)	More than one spare input or output are programmed to the same hardware I/O terminal. **Correction**: 1. Verify spare inputs and outputs.
Leveling Overspeed (425)	Leveling overspeed detected. Car will perform an emergency stop and be removed from service. **Correction**: 1. Verify landing system connections and configuration (CONFIG2 > System Control Parameters > Leveling Overspeed).
LLI Antinuisance (352)	Informational. The light load antinuisance call threshold has been achieved; additional car calls are being canceled. Self resetting. Cannot be bypassed.
LS Config Error (427)	Generated when Level Distance is not greater than Level Dead Zone Distance and/or Relevel Distance is not greater than Relevel Dead Zone Distance. Car is shut down. The fault is non-latching. **Correction**: Adjust Config 02 > System Control Parameters mentioned above.
LS-EDGE Boot Correction (364)	If controller loses power, LS-EDGE continues to record position for a short period of time. When power is regained, if LS-EDGE determines that car has moved from last recorded position, it will perform a terminal sync to correct. **Correction**: 1. Cycle power. LS-EDGE should clear the message. 2. Verify brake is holding 125% of rated load.
LS-EDGE Boot with Error (363)	Initiated by LS-EDGE-EL landing system. LS-EDGE has discovered an error while booting up after a power on or system reset. All calls will be canceled; doors will remain closed. Cannot be bypassed.

Table 2.15 Touch Screen Event Listings

Event	Description
LS-EDGE Count Error (362)	Initiated by LS-EDGE-EL. Position count upon detecting a previously learned magnet is outside acceptable margin. All calls will be canceled; doors will remain closed. Cannot be bypassed. **Correction**: 1. Verify position of magnet. Reset LS-EDGE. 2. Repeat hoistway learn if problem persists (Utils > Landing System Utilities > Hoistway Learn (Landing System Learn).
LS-EDGE Floor Checksum (368)	After a learn operation, the landing system and the controller both store the resulting checksum. On power up, the checksums are compared to ensure they match. If they do not, the car will not be allowed to move until a successful learn operation is performed. Bypass in Construction or Inspection bypass mode. **Correction**: 1. Repeat hoistway learn if problem persists (Utils > Landing System Utilities > Hoistway Learn (Landing System Learn).
LS-EDGE Learn Active (361)	Informational message while LS-EDGE is performing a hoistway learn operation.
LS-EDGE Position Error (365)	Initiated by the LS-EDGE-EL landing system. LS-EDGE has detected a previously learned floor zone or terminal magnet outside learned position margins. If moving, the car will perform an emergency stop. If stopped, the car will not be allowed to move. Bypassed in Construction Bypass mode. **Correction**: 1. Verify magnet positions. 2. Repeat hoistway learn (Utils > Landing System Utilities > Hoistway Learn (Landing System Learn).
LS-EDGE: Access Ovrspd (446)	LS-EDGE has detected an overspeed while operating on hoistway access. This fault and message are generated when SPD0 = High, SPD1 = High and INA = Low
LS-EDGE: Inspect Ovrspd (447)	LS-EDGE has detected an overspeed while operating on Inspection mode. This fault and message are generated when SPD0 = Low, SPD1 = High and MRIN, INCP or INCT = Low. **Correction**: 1. Verify Inspection Overspeed setting (CONFIG02 > System Control Parameters > Inspection Overspeed). 2. Verify Profile Scale setting (CONFIG02 > System Control Parameters > Profile Scale).
M2L Input Mismatch (172)	Traction Only. The M2L signals seen by the SPB and PLD do no match. 1. Possible problem with the physical input to SPB or PLD. 2. Possible communication problem between SPB and PLD.
M2L is Low (134)	2LS bus unexpectedly low. Cannot be bypassed. **Correction**: 1. Verify fuse F2MV on SCE-UPD board.
M2MV is Low (132)	2MV Bus (120VAC) monitoring input is low. Cannot be bypassed. 1. Check fuse F2MV on the SCE-UPD board. 2. Verify 120VAC across terminals X1B and X2B on the SCE-UPD.
Machine Room Construct (56)	The car is on construction operation and machine room inspection. System Verifies: - Mode of Operation = Construction MR **Correction**: 1. Exit construction operation (Construction Operation on page 1-8).

Table 2.15 Touch Screen Event Listings

Event	Description
Machine Room Inspection (60)	The car is on machine room inspection. Cannot be bypassed. System Verifies: - Mode of Operation = Inspection MR 1. If in error, verify position of machine room inspection switch.
MC-CPI (0) is Offline (320) MC-CPI (1) is Offline (321) MC-CPI (2) is Offline (322) MC-CPI (3) is Offline (323)	The MC-CPI at this ID is offline. Fault-bypassed in Construction. **Correction**: 1. Verify CPI connections and power. 2. Verify CPI ID switches correct and fully on or off. 3. Cycle power to the controller. 4. Contact MCE; possible defective MC-CPI board.
MDRE Failed to Turn Off (135) or (412)	MDRE monitors the solid state drive DRE device. The device did not open when expected. Cannot be bypassed. **Correction**: 1. Check the associated wiring. 2. Verify the DRE system output. 3. Contact MCE; possible defective SCE-CPU board.
MDRE Failed to Turn On (136) ~~or~~ (413)	MDRE monitors the solid state drive DRE device. The device did not close when expected. Fault-bypassed in Construction/Inspection. **Correction**: 1. Check the associated wiring. 2. Verify the DRE system output. 3. Contact MCE; possible defective SCE-CPU board.
MEB2 Redundancy Fault (423)	Checks the emergency brake activation logic. MEB2 should be active every other run. **Correction**: 1. Check connector at DSE/EB2 on SCE-HVI board. If connection is correct, go to PLD DIAG > PLD INPUTS. View flag MEB2. 2. If MEB2 does not toggle every other run, contact MCE; possibly faulty SCE-HVI board.
MEB3 Failed to Turn Off (283)	MEB3 monitors the EB3 emergency brake device. EB3 did not go low when expected. Cannot be bypassed. **Correction**: 1. Verify the EB3 system output, PLD Diag > PLD Outputs > EB3P.
MEB3 Failed to Turn On (284)	MEB3 monitors the solid state emergency brake device. The device did not close when expected. Fault-bypassed in Construction/Inspection. **Correction**: 1. Verify the EB3 system output, PLD Diag > PLD Outputs > EB3P vs. test point EB3 on SCE-HVI board.
MEB3/4 Redundancy Fault (424)	Traction Only. Checks emergency brake activation logic. MEB34 should be active every other run. **Correction**: 1. Go to SPB DIAG > SPB INPUTS. View flag MEB34 B. This flag should toggle every other run. If not, contact MCE; possibly faulty SCE-HVI board.
Motor Time Out (10)	Failure of the car to reach a target floor in the allowed time. **Correction**: 1. Modify motor limit timer to a value that allows car to run the entire hatch without a fault. 2. Ensure that drive or starter is not shutting down during a run. 3. There may be a mechanical problem that prevents or slows the motion of the car.

Table 2.15 Touch Screen Event Listings

Event	Description
Motor Time Out Shutdown (327)	The CONFIG01 timer, MOTOR/VALVE TIME LIMIT has been exceeded (typical 5 minutes; max 30 minutes). **Correction**: 1. If car stalls in an express zone without door zone magnets it may take more than 5 minutes to arrive at a landing. Increase timer setting to allow sufficient time. Check event log for other events that may have prevented car from moving. Verify no obstructions.
Movement Stalled (448)	Traction Only. The elevator is being commanded to level for more than thirty seconds. 1. The elevator is not moving when being commanded to level. 2. The elevator moved past the floor without stopping.
MPSBR Failed to Turn Off (324)	Traction Only. The SCE-BRK module brake output (BR+/BR-) has failed to turn off as reported by the BROM (Brake Output Monitor) input to the SCE-CPU module. Cannot be bypassed. System Verifies: - BROM is high while BRPK is low **Correction**: 1. Verify brake output (SCE-BRK BR+/BR-). 2. Verify BRPK input to SCE-BRK is properly connected and not shorted.
MPSBR Failed to Turn On (235)	Traction Only. The SCE-BRK module brake output (BR+/BR-) has failed to turn on as reported by the BROM (Brake Output Monitor) input to the SCE-CPU module. Fault bypassed in Construction/Inspection. System Verifies: - BROM is low while BRPK is high **Correction**: 1. Verify brake output (SCE-BRK BR+/BR-). 2. Verify BRPK input to SCE-BRK is properly connected and not shorted.
MSAF Input Failure (7)	Generated if: Code 1: MSAF unexpectedly active when 2MV bus is low. Code 2: MSAF is unexpectedly inactive when 2MV bus is high and SAFP and SAFB outputs are enabled. Cannot be bypassed. **Correction**: 1. Verify wiring and voltage on 2MV terminal of SCE-HVI board. 2. Verify status of M2MV, SAFP and SAFB, System IO > System Inputs.
MSAF Is High (282)	MSAF input unexpectedly high when 2MV bus is low or SAFB or SAFP outputs are inactive. Cannot be bypassed. **Correction**: 1. Verify M2MV, SAFB and SAFP through System IO > System Inputs. 2. Go to SPB DIAG > SPB Inputs. View flag MSAF B. This flag must toggle during door operation as part of the cycle test. 3. Contact MCE; possible faulty SCE-HVI board.
MSAF Is Low (133)	MSAF input unexpectedly low when 2MV bus is high and SAFB and SAFP outputs are active. If stopped, the car will not be allowed to move. If moving, the car will stop at the destination floor and cancel all calls. Cannot be bypassed. System Verifies: - Monitoring input MSAF low. - M2MV bus has power. **Correction**: 1. Verify M2MV, SAFB and SAFP through System IO > System Inputs.

Table 2.15 Touch Screen Event Listings

Event	Description
No Door Zone Fault (272)	DZ signal not seen at end of run. Fault-bypassed in Construction/Inspection. **Correction**: 1. Verify DZ system input, PLD Diag > PLD Inputs & SPA Diag > SPA Flags. 2. View DZ LED on SCE-CPU board.
No Leveling Fault (274)	No leveling inputs detected during run. Fault-bypassed in Construction/Inspection. Code 1: ULM or DLM detected. Code 2: Neither ULM nor DLM detected. **Correction**: 1. Verify DLM, ULM system inputs, System IO > System Inputs.
Nudging (38)	The door is closing in nudging mode. Fault-bypassed in Construction. System Verifies: - Door Flags = Nudging **Correction**: 1. Check for stuck PHE/DOB/Safe Edge. 2. Check for debris or obstruction in door track. 3. System IO > Programmed Inputs > PHE/DOB/SAFE EDGE.
Out of Service (40)	The COS Timer has elapsed subsequent to the Car Delayed Timer having already elapsed. Fault-bypassed in Construction/Inspection. System Verifies: - Car Flags - Car Out of Service **Correction**: 1. Determine the cause of the delay. 2. See Car Delayed for additional information.
Overload (45)	Car is loaded beyond overload setting. Buzzer will sound and car will not leave floor until load is below the setting. Not generated in construction operation. Bypassed by FRS. **Correction**: 1. If in error, verify no input is programmed for the Load Over function. 2. Otherwise, calibrate load weigher. 3. Verify status of input and input wiring.
Overload 2 (46)	Car is loaded beyond overload setting. Buzzer will sound and car will not leave floor until load is below the setting. Not generated in construction operation. Not bypassed by FRS. **Correction**: 1. If in error, verify no input is programmed for the Load Over 2 function. 2. Otherwise, calibrate load weigher. 3. Verify status of input and input wiring.
Parameter Load Error (456)	The system failed to load specified parameters from either the SD card or USB drive. **Correction**: Remove and reinsert the SD card or USB drive and repeat upload.
Parameter Range Fit (340)	When loading stored parameters, some parameters did not pass the valid range check. This message is not necessarily a problem but parameter verification is recommended. This may occur when: 1. Changing software. 2. If a parameter is corrupted. 3. Using parameter files with different versions.

Table 2.15 Touch Screen Event Listings

Event	Description
Parameter Storage Fault (130)	A fault occurred while parameters were being stored. Cannot be bypassed. The car will not be allowed to move. **Correction**: 1. If fault occurred while updating software, reset processor C, repeat software update. 2. If fault does not clear, see error code under STORAGE ERROR (SPB DIAG, SPB NUMERIC). Contact MCE.
Passcode Enabled (451)	While the passcode remains active this message will be displayed on the Home screen and the car will not respond to hall calls. Please refer to Passcode (Restricted Mode) on page 1-76.
Passenger Mode (0)	Passenger mode active.
PHE Antinuis. Disabled (351)	Informational. PHE anti-nuisance feature has been disabled.
PHE Antinuisance (350)	Informational. The photo eye anti-nuisance call threshold has been achieved; all car calls are canceled. Self resetting. Cannot be bypassed.
PHE Bypass (32)	The door photo eye/infrared detector has been active for a timer determined period and is now being bypassed. Fault-bypassed in Construction. System Verifies: - Door Flags = Photo Eye Bypassed **Correction**: 1. If in error, verify no input programmed PHE. 2. Check the PHE input. 3. See related Stuck PHE and Bypass Stuck PHE events.
PHE Fail (33)	The door photo eye/infrared detector has failed. Issued when the photo eye has been continuously activated for a predetermined time while the doors are fully closed. Fault-bypassed in Construction. System Verifies: - Door Flags = Photo Eye Failed **Correction**: 1. If in error, verify no input programmed if PHE not used. 2. Check that input is properly wired and programmed. 3. System IO > Programmed Inputs > PHE.
PLD RX Communication (237)	No communication received from PLD. Car not allowed to move. Fault cannot be bypassed. A forced bootload may resolve the issue, otherwise, board replacement may be necessary.
PLD RX Message (239)	Message from PLD not properly formed. Car not allowed to move. Fault cannot be bypassed. A forced bootload may resolve the issue, otherwise, board replacement may be necessary.
PLD TX Communication (236)	Unable to communicate with PLD. Car not allowed to move. Fault cannot be bypassed. A forced bootload may resolve the issue, otherwise, board replacement may be necessary.
PLD TX Message (238)	Message sent to PLD not properly formed. Car not allowed to move. Fault cannot be bypassed. A forced bootload may resolve the issue, otherwise, board replacement may be necessary.
PLD Write Fault (Edge) (218)	Initiated by LS-EDGE-EL landing system. The ETS trip value cannot be written to the landing system PLD. Cannot be bypassed. **Correction**: 1. PLD hardware has failed or software is not loaded. 2. Verify software versions for LS-EDGE-EL.
PM Failed to Turn Off (254)	Traction Only. The primary motor contactor failed to drop out at the end of a run. Cannot be bypassed. **Correction**: 1. Check PMP LED on SCE-CPU IDC connector.

Table 2.15 Touch Screen Event Listings

Event	Description
PM Failed to Turn On (255)	Traction Only. The primary motor contactor did not pick at the beginning of a run. Cannot be bypassed. **Correction**: 1. Check PM contactor coil.
PMP Failed to Turn Off (246)	Traction Only. Normally closed Auxiliary contact for PM contact did not pick at end of run. Fault-bypassed in Construction. **Correction**: 1. Check PM aux contacts.
PMP Failed to Turn On (247)	Traction Only. Normally open Auxiliary contact for PM contact did not drop out at beginning of run. Cannot be bypassed. **Correction**: 1. Check PM aux contacts.
Positioning (9)	Car position has not been established. The car is reestablishing position. Fault-bypassed in Construction/Inspection. System Verifies: - Car Flag Correction is active. - Car is not on Inspection or construction operation. - Car is on Automatic mode **Correction**: 1. Car will move to reestablish position at a landing.
Processing Car Calls (291)	Generated while car is continuing to respond to registered car calls subsequent to activation of capture mode (Pretest switch on SCE-CPU) or a recall switch that is configured to answer existing car calls. Once calls are satisfied, the elevator will recall and shut down awaiting test switch activation.
PTI Recall (100)	The car is recalling on emergency power operation. Fault-bypassed in Construction/Inspection. **Correction**: 1. View System IO > Programmed Inputs > PTI.
PTI Shutdown (101)	The car has stopped due to power loss. Fault-bypassed in Construction/Inspection. System Verifies: - Power Transfer Data = PTI Shutdown **Correction**: 1. View System IO > Programmed Inputs > PTI.
Quad Sensor Loss (Edge) (217)	Initiated by LS-EDGE-EL landing system. Indicates that one pair of quad differential signals from the landing sensor to the controller has failed. Fault-bypassed in Construction/Inspection. **Correction**: 1. A hall effect sensor may have failed or the bias magnet is broken or defective. 2. Contact MCE, may be defective LS-EDGE.
Quadrature Loss CH-B (230)	Initiated by LS-EDGE-EL landing system. Indicates that the controller is not receiving the B channel of the quadrature signal stream from the landing sensor. Fault-bypassed in Construction/Inspection.
Quadrature Offset CH-B (366)	Initiated by LS-EDGE-EL landing system. Indicates Channel B offset from Channel A is not correct. Bypassed in Construction or Inspection Bypass operation.
Random Calls Generator (18)	The random call generator has been activated. This generator is used to exercise the elevator using random calls. **Correction**: Check parameter setting.

Table 2.15 Touch Screen Event Listings

Event	Description
Random Car Calls Gen (156)	The random car call generator has been activated. This generator is used to exercise the elevator using random car calls. **Correction**: Check parameter setting.
Random Hall Calls Gen (157)	The random hall call generator has been activated. This generator is used to exercise the elevator using random hall calls. **Correction**: Check parameter setting.
Recall Complete (453)	Car has completed recall for the specified mode of operation and is at the user defined recall floor and has completed the configured door operation at that floor. Fault-bypassed in Construction/Inspection. **Correction**: 1. If in error, verify inputs and programming (Config 01 > Configure Spare Inputs) for specified recall action.
Recall Done (292) (442)	Car has completed recall operation. **Correction**: Check recall input.
Recall Done Switch 1 (116) Recall Done Switch 2 (117) Recall Done Switch 3 (118) Recall Done Switch 4 (119)	The car has completed recall in response to the indicated recall switch and has completed the configured door operation at the floor. Cannot be bypassed. System Verifies: - Recall Data = Recall Switch 'n' - Recall Data = Complete **Correction**: 1. If in error, verify inputs and programming (Config 01 > Configure Spare Inputs) for specified recall action.
Recall SW: Bypassed (373)	Informational. An active recall switch is bypassed due to a higher mode of operation.
Recall Switch 1 (41) Recall Switch 2 (42) Recall Switch 3 (43) Recall Switch 4 (44)	Recall switch "n" has been activated. Fault-bypassed in Construction. System Verifies: - Mode of operation = Recall Switch 'n' - Recall Data Type = Recall Switch 'n' - Recall Data, Complete is not True. **Correction**: 1. If in error, verify no input is programmed (Config 01 > Configure Spare Inputs) for this recall switch. 2. Otherwise, verify switch mechanically and electrically. 3. Verify state of input and input wiring.
Recalling (5)	Car is recalling to selected recall floor (fire service, Pretest operation, Aux power, Recalling switches, Floor operation, or PTI input). Fault-bypassed in Construction/Inspection. **Correction**: 1. If in error, verify that the assigned recall input (System IO > Programmed Inputs) is inactive. 2. Verify user defined recall floor.
Recalling Switch 1 (112) Recalling Switch 2 (113) Recalling Switch 3 (114) Recalling Switch 4 (115)	The indicated recall switch is active. Hall calls are canceled or reassigned. Car calls disposition is according to user settings for the switch. Cannot be bypassed. **Correction**: 1. If in error, verify that the input is wired correctly. If not used, verify that the input is not programmed; (System IO > Programmed Inputs).

Table 2.15 Touch Screen Event Listings

Event	Description
SAFH Input Low (163)	The hoistway safety string input is low. Car will perform an emergency stop or, if at a floor, will not move. Doors remain as they are. System Verifies: - SAFH Input is low - SAFC input high **Correction**: 1. If in error verify input and input devices mechanically and electrically.
Saving Dispatch Params (377)	Appears when dispatching related parameters are being saved. Informational.
Saving Other Car Params (378)	Appears when parameters communicated by other car in duplex pair are being saved. Informational.
SD Card Error (250)	The micro-SD card used for event logging is damaged or improperly formatted. Remove and reseat the card. Replace the card with a new card of like capacity if required. Cannot be bypassed.
SD File System Error (454)	System has determined that data sent to micro-SD card on SCE-CPU is invalid. **Correction**: Remove and reinsert micro-SD card and repeat file transfer. If the problem persists, a replacement micro-SD card may be required.
SE Bypass (34)	The door safe edge input has been bypassed. See SE Fail. Fault-bypassed in Construction. System Verifies: - Door Flags = Safe Edge Bypassed **Correction**: 1. Verify no input programmed if SE is not used. 2. See SE Fail (Config 01 > Configure Spare Inputs).
SE Fail (35)	The door safe edge has failed. Issued when the safe edge has been continuously activated for a predetermined period while the doors are fully closed. Fault-bypassed in Construction. System Verifies: - Door Flags = Safe Edge Failed **Correction**: 1. Check for obstruction. 2. Check that input is properly wired and programmed (Config 01 > Configure Spare Inputs).
Security Disabled (372)	Car call security has been disabled. Informational.
Simplex Car ID Error (457)	Generated if Number of Cars = 1 and Car ID is anything other than 1.
SPA: DETS Position High (433)	Traction only. SPA reports the car encountered the DETS switch at a position higher than that learned during the learn operation. **Correction**: 1. Verify position of switch (software or physical). 2. Repeat learn operation (Utils > Landing System Utilities > Terminal Switch Learn).
SPA: DETS Position Low (432)	Traction only. SPA reports the car encountered the DETS switch at a position lower than that learned during the learn operation. The car will perform an emergency stop then proceed at construction speed to the terminal. **Correction**: 1. Verify position of switch (software or physical). 2. Repeat learn operation (Utils > Landing System Utilities > Terminal Switch Learn).

Table 2.15 Touch Screen Event Listings

Event	Description
SPA: DETS Speed High (429)	Traction only. SPA reports the car was traveling faster than 95% of contract speed upon encountering the Down Emergency Terminal Switch. The car will perform an emergency stop then proceed at construction speed to the terminal. **Correction**: 1. Verify position of switch (software or physical). 2. Repeat learn operation (Utils > Landing System Utilities > Terminal Switch Learn).
SPA: LS-EDGE is Offline (223)	SPA has detected loss of communication with LS-EDGE. **Correction**: 1. Check CAN1 and CAN2 connections on SCE-CPU. 2. Check connections on LS-EDGE.
SPA: Motion Shutdown (437)	Traction only. Bypassed in Construction and Inspection bypass modes. The car will be unable to move until the fault is corrected. **Correction**: 1. Check event log.
SPA: PLD ABD Mismatch (203)	Traction only. The ABD signals seen by the SPA and PLD do no match. 1. Possible problem with the physical input to SPB or PLD. 2. Possible communication problem between SPA and PLD. 3. Possible communication problem between SPA and SPB.
SPA: PLD ABU Mismatch (202)	Traction only. The ABU signals seen by the SPA and PLD do no match. 1. Possible problem with the physical input to SPB or PLD. 2. Possible communication problem between SPA and PLD. 3. Possible communication problem between SPA and SPB.
SPA: PLD ATD Mismatch (201)	Traction only. The ATD signals seen by the SPA and PLD do no match. 1. Possible problem with the physical input to SPB or PLD. 2. Possible communication problem between SPA and PLD. 3. Possible communication problem between SPA and SPB.
SPA: PLD ATU Mismatch (200)	Traction only. The ATU signals seen by the SPA and PLD do no match. 1. Possible problem with the physical input to SPB or PLD. 2. Possible communication problem between SPA and PLD. 3. Possible communication problem between SPA and SPB.
SPA: PLD CDBO Mismatch (184)	Traction only. The CDBO signals seen by the SPA and PLD do no match. 1. Possible problem with the physical input to SPB or PLD. 2. Possible communication problem between SPA and PLD. 3. Possible communication problem between SPA and SPB.
SPA: PLD CTEN Mismatch (192)	Traction only. The CTEN signals seen by the SPA and PLD do no match. 1. Possible problem with the physical input to SPA or PLD. 2. Possible communication problem between SPA and PLD.
SPA: PLD DETS Mismatch (180)	Traction only. The DETS signals seen by the SPA and PLD do no match. Evaluates the type of limit switches selected in Config 02:ETS LIMIT SWITCHES vs. switches connected (virtual, physical or none). 1. Verify switches connected vs. setting in CONFIG. 02. 2. Ensure controller is programmed for the type of limit switches used. 3. Possible problem with the physical input to SPB or PLD. 4. Possible communication problem between SPA and PLD. 5. Possible communication problem between SPA and SPB.
SPA: PLD DZ Mismatch (208)	Traction only. The DZ signals seen by the SPA and PLD do no match. 1. Possible problem with the physical input to SPA or PLD. 2. Possible communication problem between SPA and PLD.

Table 2.15 Touch Screen Event Listings

Event	Description
SPA: PLD ESC Mismatch (181)	Traction only. The ESC signals seen by the SPA and PLD do no match. 1. Possible problem with the physical input to SPA or PLD. 2. Possible communication problem between SPA and PLD.
SPA: PLD HDBO Mismatch (186)	Traction only. The HBDO signals seen by the SPA and PLD do no match. 1. Possible problem with the physical input to SPB or PLD. 2. Possible communication problem between SPA and PLD. 3. Possible communication problem between SPA and SPB.
SPA: PLD ICEN Mismatch (196)	Traction only. The ICEN signals seen by the SPA and PLD do no match. 1. Possible problem with the physical input to SPA or PLD. 2. Possible communication problem between SPA and PLD.
SPA: PLD ICPD Mismatch (198)	Traction only. The ICPD signals seen by the SPA and PLD do no match. 1. Possible problem with the physical input to SPA or PLD. 2. Possible communication problem between SPA and PLD.
SPA: PLD ICPU Mismatch (197)	Traction only. The ICPU signals seen by the SPA and PLD do no match. 1. Possible problem with the physical input to SPA or PLD. 2. Possible communication problem between SPA and PLD.
SPA: PLD ICTD Mismatch (194)	Traction only. The ICTD signals seen by the SPA and PLD do no match. 1. Possible problem with the physical input to SPA or PLD. 2. Possible communication problem between SPA and PLD.
SPA: PLD ICTU Mismatch (193)	Traction only. The ICTU signals seen by the SPA and PLD do no match. 1. Possible problem with the physical input to SPA or PLD. 2. Possible communication problem between SPA and PLD.
SPA: PLD INA Mismatch (199)	Traction only. The INA signals seen by the SPA and PLD do no match. 1. Possible problem with the physical input to SPA or PLD. 2. Possible communication problem between SPA and PLD.
SPA: PLD INCP Mismatch (195)	Traction only. The INCP signals seen by the SPA and PLD do no match. This fault requires the In-Car Inspection option to be set. 1. Possible problem with the physical input to SPA or PLD. 2. Possible communication problem between SPA and PLD.
SPA: PLD INCT Mismatch (191)	Traction only. The INCT signals seen by the SPA and PLD do no match. 1. Possible problem with the physical input to SPA or PLD. 2. possible communication problem between SPA and PLD.
SPA: PLD MREN Mismatch (205)	Traction only. The MREN signals seen by the SPA and PLD do no match. 1. Possible problem with the physical input to SPA or PLD. 2. Possible communication problem between SPA and PLD.
SPA: PLD Osc Stopped (261)	Safety Processor A is reporting that the timing oscillator for PLD U1 on the SCE-CPU board has failed. Cannot be bypassed. **Correction**: 1. Press the RSTP button on the SCE-CPU board. 2. If the PLD fails to restart, contact MCE.
SPA: PLD Read Error (165)	The PLD, responsible for redundant error checking along with the safety microprocessors, has made a read error as reported by Safety Processor A (SPA). Cannot be bypassed. System Verifies: - PLD to SPA Data = Rx Error **Correction**: 1. Cycle power to the controller.
SPA: PLD SAFC Mismatch (182)	Traction only. The SAFC signals seen by the SPA and PLD do no match. 1. Possible problem with the physical input to SPA or PLD. 2. Possible communication problem between SPA and PLD.

Table 2.15 Touch Screen Event Listings

Event	Description
SPA: PLD UETS Mismatch (179)	Traction only. The UETS signals seen by the SPA and PLD do no match. Evaluates the type of limit switches selected in Config 02:ETS LIMIT SWITCHES vs. switches connected (virtual, physical or none). 1. Verify switches connected vs. setting in CONFIG. 02. 2. Ensure controller is programmed for the type of limit switches used. 3. Possible problem with the physical input to SPB or PLD. 4. Possible communication problem between SPA and PLD. 5. Possible communication problem between SPA and SPB.
SPA: SPB is Offline (12)	Safety processor A reports safety processor B is not communicating. The car will perform an emergency stop and will not be allowed to move. All calls will be canceled and the doors will not be allowed to move. Cannot be bypassed. System Verifies: - SPB sequence numbers offline **Correction**: 1. Press the SCE-CPU board RSTB button. 2. If the processor resets, monitor activity for recurrence.
SPA: SPB/PLD CDB Mismatch (183)	Traction only. The CDB signals seen by the SPA, SPB, and PLD do no match. 1. Possible problem with the physical input to SPA, SPB or PLD. 2. Possible communication problem between SPA and PLD. 3. Possible communication problem between SPA and SPB.
SPA: SPB/PLD GS Mismatch (187)	Traction only. The GS signals seen by the SPA, SPB, and PLD do no match. 1. Possible problem with the physical input to SPA, SPB or PLD. 2. Possible communication problem between SPA and PLD. 3. Possible communication problem between SPA and SPB.
SPA: SPB/PLD HDB Mismatch (185)	Traction only. The HDB signals seen by the SPA, SPB, and PLD do no match. 1. Possible problem with the physical input to SPA, SPB or PLD. 2. Possible communication problem between SPA and PLD. 3. Possible communication problem between SPA and SPB
SPA: SPC is Offline (170)	Safety processor A reports safety processor C is not communicating. The car will perform an emergency stop and will not be allowed to move. All calls will be canceled and the doors will not be allowed to move. May occur subsequent to an unsuccessful parameter update. Cannot be bypassed. System Verifies: - SPC sequence numbers offline **Correction**: 1. Press the SCE-CPU board RSTC button. 2. If the processor resets, monitor activity for recurrence.
SPA: UETS Position High (431)	Traction only. SPA reports the car encountered the Up Emergency Terminal Switch at a position higher than the position learned during the learn operation. **Correction**: 1. Verify position of switch (software or physical). 2. Relearn limit switches (Utils > Landing System Utilities > Terminal Switch Learn).

Table 2.15 Touch Screen Event Listings

Event	Description
SPA: UETS Position Low (430)	Traction only. SPA reports the car encountered the Up Emergency Terminal Switch at a position lower than the position learned during the learn operation. **Correction**: 1. Verify position of switch (software or physical). 2. Relearn limit switches (Utils > Landing System Utilities > Terminal Switch Learn).
SPA: UETS Speed High (428)	Traction only. SPA reports the car was traveling faster than the learned speed plus the delta upon encountering the Up Emergency Terminal Speed switch. Car will perform an emergency stop, then proceed at correction speed to the terminal. **Correction**: 1. Verify position of switch (software or physical). 2. Relearn limit switches (Utils > Landing System Utilities > Terminal Switch Learn).
SPB Powerup/Reset (367)	Safety Processor B is resetting due to power up. The car is not allowed to move. Doors will remain in current state. Cannot be bypassed This is a normal event during power up. Informational.
SPB: DETS Position High (407)	Traction only. SPB reports the car encountered the DETS switch at a position higher than that learned during the learn operation. **Correction**: 1. Verify position of switch (software or physical). 2. Repeat learn operation (Utils > Landing System Utilities > Terminal Switch Learn).
SPB: DETS Position Low (406)	Traction only. SPB reports the car encountered the DETS switch at a position lower than that learned during the learn operation. The car will perform an emergency stop then proceed at construction speed to the terminal. **Correction**: 1. Verify position of switch (software or physical). 2. Repeat learn operation (Utils > Landing System Utilities > Terminal Switch Learn).
SPB: DETS Speed High (395)	Traction only. SPB reports the car was traveling faster than 95% of contract speed upon encountering the Down Emergency Terminal Switch. The car will perform an emergency stop then proceed at construction speed to the terminal. **Correction**: 1. Verify position of switch (software or physical). 2. Repeat learn operation (Utils > Landing System Utilities > Terminal Switch Learn).
SPB: Inspect Ovrspd (232)	Traction only. The car has exceeded inspection speed. Fault-bypassed in Construction. **Correction**: 1. Check setting: CONFIG02 > System Control Parameters > Inspection Overspeed.
SPB: LS-EDGE is Offline (229)	SPB has detected loss of communication with LS-EDGE. **Correction**: 1. Check CAN1 and CAN2 connections on SCE-CPU. 2. Check connections on LS-EDGE.
SPB: Motion Shutdown (389)	Traction only. Bypassed in Construction and Inspection bypass modes. The car will be unable to move until the fault is corrected. **Correction**: 1. Check event log.

Table 2.15 Touch Screen Event Listings

Event	Description
SPB: Parameter Update (258)	Parameters are being updated. Cannot be bypassed. **Correction**: 1. If in error, cycle power to the controller.
SPB: PLD DSL1 Mismatch (178)	Traction only. The DSL1 signals seen by the SPB and PLD do no match. This fault is generated on a hydraulic controller or if DNTS1 is configured as a physical switch on a traction controller. 1. Possible problem with the physical input to SPB or PLD. 2. Possible communication problem between SPB and PLD.
SPB: PLD DSL2 Mismatch (177)	Traction only. The DSL2 signals seen by the SPB and PLD do no match. This fault is generated if DNTS2 is configured as a physical switch on a traction controller. (Traction only) 1. Possible problem with the physical input to SPB or PLD. 2. Possible communication problem between SPB and PLD.
SPB: PLD DTL Mismatch (176)	Traction only. The DTL signals seen by the SPB and PLD do no match. This fault is only generated if the direction limit is configured as a physical input. 1. Possible problem with the physical input to SPB or PLD. 2. Possible communication problem between SPB and PLD.
SPB: PLD MRDN Mismatch (207)	Traction only. The MRDN signals seen by the SPB and PLD do no match. 1. Possible problem with the physical input to SPB or PLD. 2. Possible communication problem between SPB and PLD.
SPB: PLD MRIN Mismatch (204)	Traction only. The MRIN signals seen by the SPB and PLD do no match. 1. Possible problem with the physical input to SPB or PLD. 2. Possible communication problem between SPB and PLD.
SPB: PLD MRUP Mismatch (206)	Traction only. The MRUP signals seen by the SPB and PLD do no match. 1. Possible problem with the physical input to SPB or PLD. 2. Possible communication problem between SPB and PLD.
SPB: PLD USL1 Mismatch (175)	Traction only. The USL1 signals seen by the SPB and PLD do no match. This fault is generated on a hydraulic controller or if UNTS1 is configured as a physical switch on a traction controller. 1. Possible problem with the physical input to SPB or PLD. 2. Possible communication problem between SPB and PLD.
SPB: PLD USL2 Mismatch (174)	Traction only. The USL2 signals seen by the SPB and PLD do no match. This fault is generated if a QUTE landing system is used on a hydraulic controller or if UNTS2 is configured as a physical switch on a traction controller. 1. Possible problem with the physical input to SPB or PLD. 2. Possible communication problem between SPB and PLD.
SPB: PLD UTL Mismatch (173)	Traction only. The UTL signals seen by the SPB and PLD do no match. This fault is only generated if the direction limit is configured as a physical input. 1. Possible problem with the physical input to SPB or PLD. 2. Possible communication problem between SPB and PLD.
SPB: SPA Comm Sync (259)	Informational. SPB has established communication with SPA.

Table 2.15 Touch Screen Event Listings

Event	Description
SPB: SPA is Offline (145)	Safety processor B reports safety processor A is not communicating. The car will perform an emergency stop and will not be allowed to move. All calls will be canceled and the doors will not be allowed to move. May occur subsequent to an unsuccessful parameter update. Cannot be bypassed. System Verifies: - SPA sequence numbers offline **Correction**: 1. Press SCE-CPU board RSTA button. 2. If the processor resets, monitor activity for recurrence.
SPB: SPC Comm Sync (260)	Informational. SPB has established contact with SPC.
SPB: SPC is Offline (148)	Safety processor B reports safety processor C is not communicating. The car will perform an emergency stop and will not be allowed to move. All calls will be canceled and the doors will not be allowed to move. May occur subsequent to an unsuccessful parameter update. Cannot be bypassed. System Verifies: - SPC sequence numbers offline **Correction**: 1. Press SCE-CPU board RSTC button. 2. If the processor resets, monitor activity for recurrence.
SPB: UETS Position High (401)	Traction only. SPB reports the car encountered the Up Emergency Terminal Switch at a position higher than the position learned during the learn operation. **Correction**: 1. Verify position of switch (software or physical). 2. Relearn limit switches (Utils > Landing System Utilities > Terminal Switch Learn).
SPB: UETS Position Low (400)	Traction only. SPB reports the car encountered the Up Emergency Terminal Switch at a position lower than the position learned during the learn operation. **Correction**: 1. Verify position of switch (software or physical). 2. Relearn limit switches (Utils > Landing System Utilities > Terminal Switch Learn).
SPB: UETS Speed High (390)	Traction only. SPB reports the car was traveling faster than the learned speed plus the delta upon encountering the Up Emergency Terminal Speed switch. Car will perform an emergency stop, then proceed at correction speed to the terminal. **Correction**: 1. Verify position of switch (software or physical). 2. Relearn limit switches (Utils > Landing System Utilities > Terminal Switch Learn).
SPC Started Up (168)	SPC reports it has booted up. Cannot be bypassed.
SPC: 3HN Comm Loss (255)	Safety processor C is reporting that serial hall call communications have been lost. The system will begin emergency dispatch operation. Cannot be bypassed. **Correction**: 1. Check power to hall call bus (fuse F24HWY on SCE-UPD board).
SPC: CAN Comm Loss (224)	Safety processor C is reporting CAN communications have been lost. Cannot be bypassed.

Table 2.15 Touch Screen Event Listings

Event	Description
SPC: CAN3 Comm Loss (171)	Safety processor C is reporting CAN 3 (Serial Hall Call) communications have been lost. Cannot be bypassed. **Correction**: 1. Check CAN connections for hall call bus (CANH3/CANL3) on SCE-CPU.
SPC: SPA is Offline (226)	Safety processor C reports that Safety Processor A is not communicating. Car will perform an emergency stop and will not be allowed to move. All calls will be canceled and doors will not be allowed to move. May occur subsequent to an unsuccessful parameter update. Cannot be bypassed. System Verifies: - SPA sequence numbers offline **Correction**: 1. Press SCE-CPU board RSTA button. 2. If the processor resets, monitor activity for recurrence.
SPC: SPB is Offline (227)	Safety processor C reports that Safety Processor B is not communicating. Car will perform an emergency stop and will not be allowed to move. All calls will be canceled and doors will not be allowed to move. May occur subsequent to an unsuccessful parameter update. Cannot be bypassed. System Verifies: - SPB sequence numbers offline **Correction**: 1. Press the SCE-CPU board RSTB button. 2. If the processor resets, monitor activity for recurrence.
Stuck Car Call (104)	A timer (10 seconds) limits the amount of time a car will be held at a floor due to a defective or stuck car call. When the timer expires, call demand at another floor will cause the defective call to be ignored and the car will continue to provide service. Fault-bypassed in Construction/ Inspection. System Verifies: - Car Flags, Stuck Car Call Timer Front = Timer Elapsed **Correction**: 1. Verify car call input not continuously activated. (See Register Calls screen and/or programmed inputs.)
Stuck Door Open Button (161)	The door open button has been detected as being pressed continuously. **Correction**: Check door open button, door open button input and diagnostic flag for DOB under System IO > Programmed Inputs > screen 2.
Stuck Door Zone Fault (271)	Door zone did not go low during run. Fault-bypassed in Construction/ Inspection. **Correction**: 1. Verify activity. 2. Check wiring. 3. Verify DZ flag activity at Utilities > Landing System Utilities > Landing System View to see that DZ turns off when car is between floors.
Stuck Down Hall Call (357)	System has detected a sticking down hall call button.
Stuck Leveling Fault (273)	Leveling signal did not transition low at end of run. ULM and DLM are both active. Fault-bypassed in Construction/Inspection. **Correction**: 1. Verify, UTILS > Landing System View > ULMF or DLMF. 2. Verify landing system function and wiring.

Table 2.15 Touch Screen Event Listings

Event	Description
Stuck Photo Eye (159)	Photo eye input continuously active. If Bypass Stuck PHE (Config 01) is enabled, the controller will ignore the PHE and close the doors after the Stuck PHE Timer elapses or when the Car Delayed timer expires, whichever comes first. Fault-bypassed in Construction/Inspection. System Verifies: - Door Flags = Stuck Photo Eye Timer Elapsed - Door Flags, Photo Eye Bypassed and Photo Eye Failed are not true. **Correction**: 1. Verify PHE status, System IO, Programmed Inputs. 2. If no PHE is installed, PHE input should not be programmed. 3. Verify function of PHE device.
Stuck Safe Edge (160)	Safe edge input continuously active. If Bypass Stuck Safe Edge (Config 01) is enabled, the controller will ignore the SE and close the doors after the Stuck SE Timer elapses or when the Car Delayed timer expires, whichever comes first. Fault-bypassed in Construction/Inspection. System Verifies: - Door Flags, Stuck Safe Edge Timer = Elapsed - Door Flags Safety Edge Bypassed and Safe Edge Failed are not true. **Correction**: 1. Verify Safe Edge status, System IO > Programmed Inputs. 2. If no Safe Edge is installed, input should not be programmed. 3. Verify function of Safe Edge device.
Stuck Sensor (Edge) (219)	Initiated by the LS-EDGE-EL landing system. A leveling or terminal sensor is not changing state. Fault-bypassed in Construction/Inspection. **Correction**: 1. Verify the LED indicators (UTILS > LS View) show state changes while traversing door zones, ETS, or Terminal magnets. 2. Replace LS-EDGE-EL tape reader.
Stuck Up Hall Call (356)	System has detected a sticking up hall call button.
Suspension Integrity (1)	Traction Only. With alternate suspension materials (belts, non-steel ropes, etc.), a sensor is required to monitor integrity of suspension means. Fault is triggered by an active input from that sensor. Car will stop at the next floor, cancel all calls, and cycle doors to allow passengers to exit, and shut down. Fault-bypassed in Construction. Manual reset required. System Verifies: - SMI input is configured. - SMI input is low. **Correction**: 1. If in error, check that an input is not mistakenly programmed for this function (System IO > Programmed Inputs, SMI input). If so, set to unused. 2. If valid, verify sensor and suspension integrity.
Terminal Switch Learn (386)	A terminal switch learn operation is in progress.
Terminal Sync (Edge) (222)	Initiated by the LS-EDGE-EL landing system. Indicates that the landing system has lost position and is performing a terminal synch operation. Fault-bypassed in Construction.

Table 2.15 Touch Screen Event Listings

Event	Description
Test Mode (3)	The controller is operating in Test Mode. This mode allows the car to be run at contract speed with door opening disabled to facilitate testing. Hall calls are not registered. Fault-bypassed in Construction/Inspection. System Verifies: - Mode of operation = Test **Correction**: 1. If Test mode is not selected, check System IO > System Inputs, Test. 2. Verify Test/Pretest switch not in Test position.
Top Deviation (Edge) (221)	Initiated by the LS-EDGE-EL landing system. LS-EDGE-EL encountered terminal magnets that do not match the learned positions. Fault-bypassed in Construction/Inspection. **Correction**: 1. Verify magnets for terminals have not been changed. 2. Relearn terminal magnet locations (Utils > Landing System Utilities > Terminal Switch Learn).
Traction Loss (245)	Traction only. The travel distance determined from motor rotation is less than half or greater than twice the travel distance determined from the landing system. This fault is retained over a power cycle. (Traction only) 1. On inspection operation, verify that the drive is calibrated to move the elevator at the requested speed. 2. Verify landing system connections.
U/DETS-LS Speed High (420)	Traction only. The LS-EDGE has detected an overspeed at one of the terminal ETS magnets.This fault and message are generated when SPD0 = Low and SPD1 = Low. **Correction**: 1. Verify SPD0 and SPD1 wires are connected. 2. Verify overspeed settings. 3. Relearn terminal switches (Utils > Landing System Utilities > Terminal Switch Learn).
UFE/PM Stuck Off (142)	Up Fast Enable or Primary Motor contactor output is stuck off. **Correction**: 1. Verify status of output.
UFE/PM Stuck On (141)	Up Fast Enable or Primary Motor contactor output is stuck on. **Correction**: 1. Verify status of output.
Unknown Fault (166)	Generated by safety processor SPC. Appears only in the Event Log. SPC received an unidentified error code. May occur after unsuccessful software update. Cannot be bypassed. **Correction**: 1. If after unsuccessful update, repeat update procedure.
USB Drive Inserted (438)	Momentary message. A USB drive has been inserted into the port on the SCE-CPU board.
USB Drive Removed (439)	Momentary message. A USB drive has been removed from the port on the SCE-CPU board.
USB File System Error (455)	The system has detected a problem with the USB drive mounted on the SCE-CPU board. **Correction**: 1. Remove and reinsert USB drive. 2. Replace USB drive.
USE/BR Stuck Off (147)	The Up Slow Enable/Brake Contactor output is stuck off. **Correction**: 1. Verify status of output.

Table 2.15 Touch Screen Event Listings

Event	Description
USE/BR Stuck On (146)	The Up Slow Enable/Brake Contactor output is stuck on **Correction**: 1. Verify status of output.
USL1 is Low (371)	Informational. USL1 input is low. **Correction**: 1. If in error, verify function of switch (if physical) and/or input.
USL1 Position High (403)	Traction Only. The car encountered the USL1 switch at a position higher than that learned during the learn operation. The car will perform an emergency slowdown then proceed at correction speed to the landing. **Correction**: 1. Verify position of switch (software or physical). 2. Repeat learn operation (Utils > Landing System Utilities > Terminal Switch Learn).
USL1 Position Low (402)	Car encountered USL1 switch at a position lower than that learned during the learn operation. The car will perform an emergency slowdown then proceed at correction speed to the landing. **Correction**: 1. Verify position of switch (software or physical). 2. Repeat learn operation (Utils > Landing System Utilities > Terminal Switch Learn).
USL1 Speed High-Lower (391)	Traction Only. The car was traveling faster than the learned speed upon encountering the USL1 switch. The car will perform an emergency slow-down then proceed at correction speed to the landing. 1. Verify position of switch (software or physical). 2. Repeat learn operation (Utils > Landing System Utilities > Terminal Switch Learn).
USL1 Speed High-Upper (392)	Traction Only. The car was traveling faster than the learned speed plus the delta upon encountering the USL1 switch. The car will perform an emergency stop then proceed at correction speed to the terminal. 1. Verify position of switch (software or physical). 2. Repeat learn operation (Utils > Landing System Utilities > Terminal Switch Learn).
USL2 Position High (405)	Traction Only. The car encountered the USL2 switch at a position higher than that learned during the learn operation. The car will perform an emergency slowdown then proceed at correction speed to the landing. 1. Verify position of switch (software or physical). 2. Repeat learn operation (Utils > Landing System Utilities > Terminal Switch Learn).
USL2 Position Low (404)	The car encountered the USL2 switch at a position lower than that learned during the learn operation. The car will perform an emergency slowdown then proceed at correction speed to the landing. 1. Verify position of switch (software or physical). 2. Repeat learn operation (Utils > Landing System Utilities > Terminal Switch Learn).
USL2 Speed High-Lower (393)	Traction Only. Car traveling faster than learned speed upon encountering USL2 switch. Car performs emergency slowdown then proceeds at cor-rection speed to landing 1. Verify position of switch (software or physical). 2. Repeat learn operation (Utils > Landing System Utilities > Terminal Switch Learn).

Table 2.15 Touch Screen Event Listings

Event	Description
USL2 Speed High-Upper (394)	Traction Only. Car traveling faster than learned speed plus delta upon encountering USL2 switch. Car will perform emergency stop then proceed at correction speed to terminal. 1. Verify position of switch (software or physical). 2. Repeat learn operation (Utils > Landing System Utilities > Terminal Switch Learn).
USLx and DSLx are Low (8)	Named Up and Down Slow Limit switches low. Car performs emergency stop and is not allowed to move. All calls canceled. If in a door zone doors will cycle to allow passenger exit. Fault-bypassed in Construction. System Verifies: - Limit inputs USL and DSL low. - 2 bus has power. **Correction**: 1. Verify switches mechanically and electrically. 2. Verify input connections. 3. View System IO > System Inputs, USL and DSL for correct status. 4. Repeat learn operation (Utils > Landing System Utilities > Terminal Switch Learn).
UTL and DSLx are Low (313)	Up Terminal Limit switch and named Down Slow Limit both low (open). If moving up, car will perform emergency stop. If moving down, car will drop high speed, locate a floor, and cycle doors to allow passengers to exit. Fault-bypassed in Construction. System Verifies: - Limit inputs UTL and DSL low. - 2 bus has power. **Correction**: 1. Verify switches mechanically and electrically. 2. Verify input connections. 3. View System IO > System Inputs, UTL and DSL for correct status. 4. Repeat learn operation (Utils > Landing System Utilities > Terminal Switch Learn).
UTL and DTL are Low (11)	Up and Down Terminal Limit switches are both low (open). Car will perform emergency stop and will not be allowed to move. All calls will be canceled. If in a door zone, doors will be cycled to allow passengers to exit. Cannot be bypassed. System Verifies: - Limit inputs UTL and DTL low. - 2 bus has power. **Correction**: 1. Verify switches mechanically and electrically. 2. Verify input connections. 3. View System IO > System Inputs, UTL and DTL for correct status. 4. Repeat learn operation (Utils > Landing System Utilities > Terminal Switch Learn).

Table 2.15 Touch Screen Event Listings

Event	Description
UTL is Low (154)	Up Terminal Limit switch has opened. If moving up, the car will perform an emergency stop. This switch should not open unless the car overshoots the terminal and opens the switch. The open switch prevents further movement towards the terminal. Cannot be bypassed. System Verifies: - 2 bus has power. - UTL input is low. - USL (Up Slow Limit) input is low. **Correction**: 1. If in error, verify switches and connections mechanically and electrically. 2. Check the state of the System IO > System Inputs > UTL, against the state of the switch (touchscreen landing system flags). 3. Repeat learn operation (Utils > Landing System Utilities > Terminal Switch Learn).
Waiting for In-Car Sw (443)	Informational. The car is at a recall floor with doors open awaiting activation of the current mode of operation in-car switch.
Warning: Flts Bypassed (266)	FAULTS ARE BEING BYPASSED. The fault bypass jumper on the SCE-CPU board is in the BYPASS position and Utilities > Fault Bypass is enabled for the active mode of operation (UTILS > Construct and Bypass Faults).

Event Log Viewing

Messages helpful to operational diagnostics are stored in an event log on the micro SD card plugged into the SCE-CPU board. The event log may be viewed through the on-board touch screen or the web interface.

The event files are in .csv (comma separated values) format. These files may be read as a continuous text file in applications like Notepad or Wordpad or in a table format when opened using Microsoft Word or Excel.

In instances when you are working with MCE Technical Support, log files may be easily attached to an email and sent to the MCE Technician for examination.

Touch Screen Log Access

1. Scroll down the touch screen to the System Diag tab.
2. Select Event Log.

Some events provide both ON and OFF state messages. In these instances, there will be an asterisk (*) at the end of the fault text to let you know that a second, OFF state, event (gray) will be in the log.

Event log entries are in color:
Red: Error. Will cause an "Excessive" faults condition if too many occur in a 24 hour period.
Yellow: Fault
Blue: Informational
Gray: Inactive

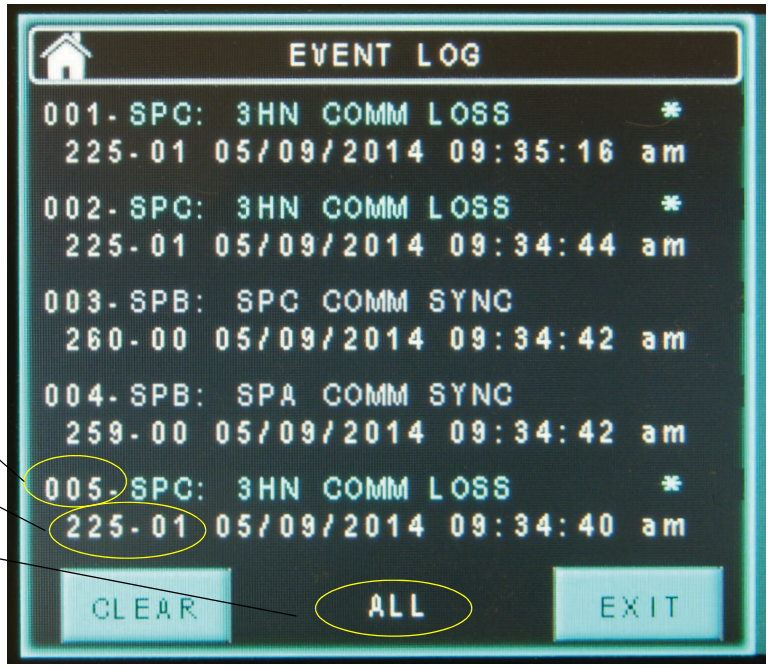

Position in list #

Fault Number - Fault Code

Filter selection

Filtering

A button at the bottom center of the screen allows you to filter the event display.

PC Log Access

Through a PC, open the web browser and enter the IP address of the controller in the URL box. When contact with the controller is established, a tabbed Element Series interface will appear.

1. Click on the Faults tab.
2. A list of any active faults will appear, followed by the system Event Log.

Maintenance Plan Information

In this section

This section provides information to help you maintain the Element installation and to incorporate Element into your Maintenance Control Plan.

- 8.6.1.2.2
  Where a defective part directly affecting the safety of the operation is identified, the equipment shall be taken out of service until the defective part has been adjusted, repaired, or replaced.
- Controller page 3-2
- Rope Gripper page 3-3, page 3-4
- SmarTraq Door Operator page 3-5
- Traction Auxiliary Power Supply, page 3-10

Maintenance Intervals

The maintenance intervals provided here can be affected by actual site conditions. Consider:

- equipment age, condition, and accumulated wear
- design and inherent quality of the equipment
- usage
- environmental conditions
- improved technology
- the manufacturer's recommendations for any SIL rated devices or circuits

Controller

Monthly

Controller General

- 8.6.1.6.3
  - Clean the exterior and interior of the controller as necessary using a shop vacuum with appropriate attachments and a soft dry cloth.
  - Visually inspect electrical and mechanical connections. Correct if necessary.
  - Review the controller event log for recurring faults indicative of a subsystem problem, i.e., door systems, landing systems, car and hall calls, etc.
  - Listen for bearing noise from drive cooling fan (if present). Clean/repair/replace as required.

Air Conditioned Cabinets

- Inspect and clean drain tubes.
- Visually inspect filters. Clean/replace as required.

Load Weighers

MCE Isolated Platform

- With an empty car, verify voltage between LW+ and LW- within 0.3 to 1.0 VDC.
- Adjust per controller manual or installation instruction if required.

Lead/Acid Batteries

Wet cell, lead/acid batteries may be used to supply power to rescue or other power-loss backup systems. Replace battery as necessary, generally every three to five years.

- Check connections for corrosion. Remove, clean, and replace as necessary.
- Visually inspect battery bin for signs of acid leakage. If leakage has occurred, remove battery; clean and/or refinish bin; replace battery.
- Using a voltmeter, verify battery voltage is not below rated output.

Car

- 8.6.4.16 Stopping Accuracy
  - Verify car stops without releveling, within +/- 0.25 inches of level at all floors in both up and down directions where applicable.

Every Six Months

Controller General

- Monthly routine
- Clean and inspect drive cooling fan. Verify proper operation.
- With car idle and empty, cycle power to rope gripper and observe operation.
- If available, check drive fault log. Troubleshoot per drive manual.
- Verify connection integrity on drives, starters, line contactors, and discrete relays.
- While the car is operating, check for “flashing” or buzzing from contactors or discrete relays. Replace defective components.

Air Conditioned Cabinets

- Monthly routine
- Replace filters.

Load Weighers

- Monthly routine
- EMCO rope tension weigher: Perform zero calibration per controller manual.
- Henning Rope Load Sensor: Perform calibration per controller manual.
- K-Tech: Verify load adjustments per controller manual.

Lead/Acid Batteries

- Monthly routine

Car

- Monthly routine

Landing System

- Check mounting integrity and alignment.
- Check for wear on sensor head tape guides. Replace if needed.
- Visually inspect sensors. Clean if needed.
- Inspect tape. Clean with soft, lint-free cloth.

Power Supplies

- Check supply voltages at supply or at board testpoints. Adjust or replace if needed.

Brake

- Verify brake pick and hold voltage.
- Verify pick, running clearance, and drop.
- Verify minimum 95% contact between shoe and braking surface when dropped.
- Verify brake will hold 125% of rated load.
- Verify brake (position monitor) switch if present.

Yearly

Controller General

- 6 month routine as previously stated
- Verify screw termination integrity. PC terminals - 7 inch pounds.
- Verify integrity of power, isolation transformer, and filter assembly connections.
- Fuses: Verify cleanliness and physical integrity. Check for voltage drop across fuse greater than 1.0 V (AC or DC) - replace if present. MCE fuse locations are labeled - always replace with the designated type and value.

Air Conditioned Cabinets

- 6 month routine as previously stated

Load Weighers

- 6 month routine as previously stated

Lead/Acid Batteries

- 6 month routine as previously stated

Board-mounted Batteries

These batteries are used to maintain memory over power shutdown.

- Measure voltage with controller power off. See manual for specific replacement recommendation. Generally 90% or less of rated voltage (page 2-41).

Car

- 6 month routine as previously stated

Landing System

- 6 month routine as previously stated

Power Supplies

- 6 month routine as previously stated

Brake

- 6 month routine as previously stated

Rope Gripper

- Refer to manufacturer's recommendations to inspect, clean and lubricate rope gripper.
- Cycle power to rope gripper and observe operation.

SmarTraq Door Operator

- Check and adjust as needed:
  - Motor V-belt: Mid-way between the pulleys, the belt should deflect 1/2-inch (13mm) under moderate pressure. The belt should not slip. Replace if cracked or worn.
  - Open and close stop rollers: Check for flat spots. Rotate or replace as needed.
  - Chain tension: Adjust tension roller to remove slack if needed.
  - Urethane dampening strips: Check urethane strips around chain pulley and sprocket. Replace if broken. (These strips reduce operator noise.)
  - Door linkage bearings: Oil or grease once a year.
  - Clutch cable: Check tension. Adjust if undue slack.
  - Door bumpers: Check for distortion or cracking. Replace if needed.
  - Check that operator and motor mountings are tight and true.
  - Clean, but do not lubricate chain. (Excess can drip down onto passengers.)

Door Closing Force

8.6.4.13.2 Refer to the following tables:

Table 3.1 Center Parting, No Nudging

MINIMUM CLOSING TIME FOR CENTER PARTING DOORS WITHOUT RE-OPENING DEVICE (NUDGING) (sec)																						
Door Opening Width (inch)		26	28	30	32	34	36	38	40	42	44	46	48	50	52	54	56	58	60	62	64	66
(1) Code Zone Distance (inch)		11	12	13	14	15	16	17	18	19	20	21	22	23	24	25	26	27	28	29	30	31
(2) Combined Weight of Car and Hoistway Doors and All Attached Equipment (lbs)	100	0.72	0.79	0.85	0.92	0.99	1.05	1.12	1.18	1.25	1.31	1.38	1.44	1.51	1.58	1.64	1.71	1.77	1.84	1.90	1.97	2.04
	150	0.88	0.97	1.05	1.13	1.21	1.29	1.37	1.45	1.53	1.61	1.69	1.77	1.85	1.93	2.01	2.09	2.17	2.25	2.33	2.41	2.49
	200	1.02	1.11	1.21	1.30	1.39	1.49	1.58	1.67	1.76	1.86	1.95	2.04	2.14	2.23	2.32	2.41	2.51	2.60	2.69	2.79	2.88
	250	1.14	1.25	1.35	1.45	1.56	1.66	1.77	1.87	1.97	2.08	2.18	2.28	2.39	2.49	2.60	2.70	2.80	2.91	3.01	3.12	3.22
	300	1.25	1.37	1.48	1.59	1.71	1.82	1.93	2.05	2.16	2.28	2.39	2.50	2.62	2.73	2.84	2.96	3.07	3.19	3.30	3.41	3.53
	350	1.35	1.47	1.60	1.72	1.84	1.97	2.09	2.21	2.33	2.46	2.58	2.70	2.83	2.95	3.07	3.19	3.32	3.44	3.56	3.69	3.81
	400	1.44	1.58	1.71	1.84	1.97	2.10	2.23	2.36	2.50	2.63	2.76	2.89	3.02	3.15	3.28	3.42	3.55	3.68	3.81	3.94	4.07
	450	1.53	1.67	1.81	1.95	2.09	2.23	2.37	2.51	2.65	2.79	2.93	3.07	3.20	3.34	3.48	3.62	3.76	3.90	4.04	4.18	4.32
	500	1.62	1.76	1.91	2.06	2.20	2.35	2.50	2.64	2.79	2.94	3.08	3.23	3.38	3.52	3.67	3.82	3.97	4.11	4.26	4.41	4.55
	550	1.69	1.85	2.00	2.16	2.31	2.46	2.62	2.77	2.93	3.08	3.23	3.39	3.54	3.70	3.85	4.00	4.16	4.31	4.47	4.62	4.77
	600	1.77	1.93	2.09	2.25	2.41	2.57	2.73	2.90	3.06	3.22	3.38	3.54	3.70	3.86	4.02	4.18	4.34	4.50	4.67	4.83	4.99
	650	1.84	2.01	2.18	2.34	2.51	2.68	2.85	3.01	3.18	3.35	3.52	3.68	3.85	4.02	4.19	4.35	4.52	4.69	4.86	5.02	5.19
	700	1.91	2.09	2.26	2.43	2.61	2.78	2.95	3.13	3.30	3.48	3.65	3.82	4.00	4.17	4.34	4.52	4.69	4.87	5.04	5.21	5.39
	750	1.98	2.16	2.34	2.52	2.70	2.88	3.06	3.24	3.42	3.60	3.78	3.96	4.14	4.32	4.50	4.68	4.86	5.04	5.22	5.40	5.58
	800	2.04	2.23	2.41	2.60	2.79	2.97	3.16	3.34	3.53	3.72	3.90	4.09	4.27	4.46	4.64	4.83	5.02	5.20	5.39	5.57	5.76
	850	2.11	2.30	2.49	2.68	2.87	3.06	3.26	3.45	3.64	3.83	4.02	4.21	4.40	4.60	4.79	4.98	5.17	5.36	5.55	5.74	5.94
	900	2.17	2.36	2.56	2.76	2.96	3.15	3.35	3.55	3.74	3.94	4.14	4.33	4.53	4.73	4.93	5.12	5.32	5.52	5.71	5.91	6.11
	950	2.23	2.43	2.63	2.83	3.04	3.24	3.44	3.64	3.85	4.05	4.25	4.45	4.66	4.86	5.06	5.26	5.47	5.67	5.87	6.07	6.28
	1000	2.28	2.49	2.70	2.91	3.12	3.32	3.53	3.74	3.95	4.15	4.36	4.57	4.78	4.98	5.19	5.40	5.61	5.82	6.02	6.23	6.44
	1050	2.34	2.55	2.77	2.98	3.19	3.41	3.62	3.83	4.04	4.26	4.47	4.68	4.89	5.11	5.32	5.53	5.75	5.96	6.17	6.38	6.60
	1100	2.40	2.61	2.83	3.05	3.27	3.49	3.70	3.92	4.14	4.36	4.57	4.79	5.01	5.23	5.45	5.66	5.88	6.10	6.32	6.53	6.75
	1150	2.45	2.67	2.90	3.12	3.34	3.56	3.79	4.01	4.23	4.45	4.68	4.90	5.12	5.35	5.57	5.79	6.01	6.24	6.46	6.68	6.90
	1200	2.50	2.73	2.96	3.19	3.41	3.64	3.87	4.10	4.32	4.55	4.78	5.01	5.23	5.46	5.69	5.92	6.14	6.37	6.60	6.83	7.05

NOTES:
(1) See Section 2.13.4.2.2 of ASME A17.1 Safety Code for Elevators for detail
(2) See Section 2.13.4.2.1 of ASME A17.1 Safety Code for Elevators for detail

Kinetic Energy Formula

$$1/2\left(\frac{M}{32.2}\right)\left(V\right)^2 = 2.5 \text{ ft-lbf}$$

M = Combined Weight of Car and Hoistway Doors and All Attached Equipment
V = Speed in Feet Per Second

Contents
Index
MCE Web

Table 3.2 Center Parting, Nudging Provided

MINIMUM CLOSING TIME FOR CENTER PARTING DOORS (sec)																						
Door Opening Width (inch)		26	28	30	32	34	36	38	40	42	44	46	48	50	52	54	56	58	60	62	64	66
(1) Code Zone Distance (inch)		11	12	13	14	15	16	17	18	19	20	21	22	23	24	25	26	27	28	29	30	31
(2) Combined Weight of Car and Hoistway Doors and All Attached Equipment (lbs)	100	0.42	0.46	0.50	0.54	0.57	0.61	0.65	0.69	0.73	0.77	0.80	0.84	0.88	0.92	0.96	0.99	1.03	1.07	1.11	1.15	1.19
	150	0.52	0.56	0.61	0.66	0.70	0.75	0.80	0.84	0.89	0.94	0.98	1.03	1.08	1.12	1.17	1.22	1.26	1.31	1.36	1.41	1.45
	200	0.60	0.65	0.70	0.76	0.81	0.87	0.92	0.97	1.03	1.08	1.14	1.19	1.24	1.30	1.35	1.41	1.46	1.51	1.57	1.62	1.68
	250	0.67	0.73	0.79	0.85	0.91	0.97	1.03	1.09	1.15	1.21	1.27	1.33	1.39	1.45	1.51	1.57	1.63	1.69	1.75	1.81	1.87
	300	0.73	0.80	0.86	0.93	0.99	1.06	1.13	1.19	1.26	1.33	1.39	1.46	1.52	1.59	1.66	1.72	1.79	1.86	1.92	1.99	2.05
	350	0.79	0.86	0.93	1.00	1.07	1.14	1.22	1.29	1.36	1.43	1.50	1.57	1.65	1.72	1.79	1.86	1.93	2.00	2.08	2.15	2.22
	400	0.84	0.92	0.99	1.07	1.15	1.22	1.30	1.38	1.45	1.53	1.61	1.68	1.76	1.84	1.91	1.99	2.07	2.14	2.22	2.30	2.37
	450	0.89	0.97	1.05	1.14	1.22	1.30	1.38	1.46	1.54	1.62	1.70	1.79	1.87	1.95	2.03	2.11	2.19	2.27	2.35	2.43	2.52
	500	0.94	1.03	1.11	1.20	1.28	1.37	1.45	1.54	1.63	1.71	1.80	1.88	1.97	2.05	2.14	2.22	2.31	2.39	2.48	2.57	2.65
	550	0.99	1.08	1.17	1.26	1.35	1.44	1.53	1.61	1.70	1.79	1.88	1.97	2.06	2.15	2.24	2.33	2.42	2.51	2.60	2.69	2.78
	600	1.03	1.12	1.22	1.31	1.41	1.50	1.59	1.69	1.78	1.87	1.97	2.06	2.15	2.25	2.34	2.44	2.53	2.62	2.72	2.81	2.90
	650	1.07	1.17	1.27	1.37	1.46	1.56	1.66	1.76	1.85	1.95	2.05	2.15	2.24	2.34	2.44	2.54	2.63	2.73	2.83	2.93	3.02
	700	1.11	1.21	1.32	1.42	1.52	1.62	1.72	1.82	1.92	2.02	2.13	2.23	2.33	2.43	2.53	2.63	2.73	2.83	2.93	3.04	3.14
	750	1.15	1.26	1.36	1.47	1.57	1.68	1.78	1.89	1.99	2.10	2.20	2.30	2.41	2.51	2.62	2.72	2.83	2.93	3.04	3.14	3.25
	800	1.19	1.30	1.41	1.51	1.62	1.73	1.84	1.95	2.06	2.16	2.27	2.38	2.49	2.60	2.70	2.81	2.92	3.03	3.14	3.25	3.35
	850	1.23	1.34	1.45	1.56	1.67	1.78	1.90	2.01	2.12	2.23	2.34	2.45	2.56	2.68	2.79	2.90	3.01	3.12	3.23	3.35	3.46
	900	1.26	1.38	1.49	1.61	1.72	1.84	1.95	2.07	2.18	2.30	2.41	2.52	2.64	2.75	2.87	2.98	3.10	3.21	3.33	3.44	3.56
	950	1.30	1.41	1.53	1.65	1.77	1.89	2.00	2.12	2.24	2.36	2.48	2.59	2.71	2.83	2.95	3.07	3.18	3.30	3.42	3.54	3.65
	1000	1.33	1.45	1.57	1.69	1.81	1.94	2.06	2.18	2.30	2.42	2.54	2.66	2.78	2.90	3.02	3.14	3.27	3.39	3.51	3.63	3.75
	1050	1.36	1.49	1.61	1.74	1.86	1.98	2.11	2.23	2.35	2.48	2.60	2.73	2.85	2.97	3.10	3.22	3.35	3.47	3.59	3.72	3.84
	1100	1.40	1.52	1.65	1.78	1.90	2.03	2.16	2.28	2.41	2.54	2.66	2.79	2.92	3.04	3.17	3.30	3.43	3.55	3.68	3.81	3.93
	1150	1.43	1.56	1.69	1.82	1.95	2.08	2.21	2.33	2.46	2.59	2.72	2.85	2.98	3.11	3.24	3.37	3.50	3.63	3.76	3.89	4.02
	1200	1.46	1.59	1.72	1.86	1.99	2.12	2.25	2.39	2.52	2.65	2.78	2.92	3.05	3.18	3.31	3.45	3.58	3.71	3.84	3.98	4.11

NOTES:
(1) See Section 2.13.4.2.2 of ASME A17.1 Safety Code for Elevators for detail
(2) See Section 2.13.4.2.1 of ASME A17.1 Safety Code for Elevators for detail

Kinetic Energy Formula

$$1/2\left(\frac{M}{32.2}\right)\left(V\right)^2 = 7.37 \text{ ft-lbf}$$

M = Combined Weight of Car and Hoistway Doors and All Attached Equipment
V = Speed in Feet Per Second

Table 3.3 Side Slide, No Nudging

MINIMUM CLOSING TIME FOR SIDE SLIDE DOORS WITHOUT RE-OPENING DEVICE (NUDGING) (sec)																						
Door Opening Width (inch)		26	28	30	32	34	36	38	40	42	44	46	48	50	52	54	56	58	60	62	64	66
(1) Code Zone Distance (inch)		22	24	26	28	30	32	34	36	38	40	42	44	46	48	50	52	54	56	58	60	62
(2) Combined Weight of Car and Hoistway Doors and All Attached Equipment (lbs)	100	1.44	1.58	1.71	1.84	1.97	2.10	2.23	2.36	2.50	2.63	2.76	2.89	3.02	3.15	3.28	3.42	3.55	3.68	3.81	3.94	4.07
	150	1.77	1.93	2.09	2.25	2.41	2.57	2.73	2.90	3.06	3.22	3.38	3.54	3.70	3.86	4.02	4.18	4.34	4.50	4.67	4.83	4.99
	200	2.04	2.23	2.41	2.60	2.79	2.97	3.16	3.34	3.53	3.72	3.90	4.09	4.27	4.46	4.64	4.83	5.02	5.20	5.39	5.57	5.76
	250	2.28	2.49	2.70	2.91	3.12	3.32	3.53	3.74	3.95	4.15	4.36	4.57	4.78	4.98	5.19	5.40	5.61	5.82	6.02	6.23	6.44
	300	2.50	2.73	2.96	3.19	3.41	3.64	3.87	4.10	4.32	4.55	4.78	5.01	5.23	5.46	5.69	5.92	6.14	6.37	6.60	6.83	7.05
	350	2.70	2.95	3.19	3.44	3.69	3.93	4.18	4.42	4.67	4.91	5.16	5.41	5.65	5.90	6.14	6.39	6.63	6.88	7.13	7.37	7.62
	400	2.89	3.15	3.42	3.68	3.94	4.20	4.47	4.73	4.99	5.25	5.52	5.78	6.04	6.30	6.57	6.83	7.09	7.36	7.62	7.88	8.14
	450	3.07	3.34	3.62	3.90	4.18	4.46	4.74	5.02	5.29	5.57	5.85	6.13	6.41	6.69	6.97	7.24	7.52	7.80	8.08	8.36	8.64
	500	3.23	3.52	3.82	4.11	4.41	4.70	4.99	5.29	5.58	5.87	6.17	6.46	6.76	7.05	7.34	7.64	7.93	8.22	8.52	8.81	9.11
	550	3.39	3.70	4.00	4.31	4.62	4.93	5.24	5.54	5.85	6.16	6.47	6.78	7.09	7.39	7.70	8.01	8.32	8.63	8.93	9.24	9.55
	600	3.54	3.86	4.18	4.50	4.83	5.15	5.47	5.79	6.11	6.43	6.76	7.08	7.40	7.72	8.04	8.37	8.69	9.01	9.33	9.65	9.97
	650	3.68	4.02	4.35	4.69	5.02	5.36	5.69	6.03	6.36	6.70	7.03	7.37	7.70	8.04	8.37	8.71	9.04	9.38	9.71	10.05	10.38
	700	3.82	4.17	4.52	4.87	5.21	5.56	5.91	6.26	6.60	6.95	7.30	7.65	7.99	8.34	8.69	9.04	9.38	9.73	10.08	10.43	10.77
	750	3.96	4.32	4.68	5.04	5.40	5.76	6.12	6.47	6.83	7.19	7.55	7.91	8.27	8.63	8.99	9.35	9.71	10.07	10.43	10.79	11.15
	800	4.09	4.46	4.83	5.20	5.57	5.94	6.32	6.69	7.06	7.43	7.80	8.17	8.54	8.92	9.29	9.66	10.03	10.40	10.77	11.15	11.52
	850	4.21	4.60	4.98	5.36	5.74	6.13	6.51	6.89	7.28	7.66	8.04	8.42	8.81	9.19	9.57	9.96	10.34	10.72	11.11	11.49	11.87
	900	4.33	4.73	5.12	5.52	5.91	6.30	6.70	7.09	7.49	7.88	8.28	8.67	9.06	9.46	9.85	10.25	10.64	11.03	11.43	11.82	12.22
	950	4.45	4.86	5.26	5.67	6.07	6.48	6.88	7.29	7.69	8.10	8.50	8.91	9.31	9.72	10.12	10.53	10.93	11.34	11.74	12.15	12.55
	1000	4.57	4.98	5.40	5.82	6.23	6.65	7.06	7.48	7.89	8.31	8.72	9.14	9.55	9.97	10.38	10.80	11.22	11.63	12.05	12.46	12.88
	1050	4.68	5.11	5.53	5.96	6.38	6.81	7.24	7.66	8.09	8.51	8.94	9.36	9.79	10.22	10.64	11.07	11.49	11.92	12.34	12.77	13.19
	1100	4.79	5.23	5.66	6.10	6.53	6.97	7.41	7.84	8.28	8.71	9.15	9.58	10.02	10.46	10.89	11.33	11.76	12.20	12.63	13.07	13.50
	1150	4.90	5.35	5.79	6.24	6.68	7.13	7.57	8.02	8.46	8.91	9.35	9.80	10.25	10.69	11.14	11.58	12.03	12.47	12.92	13.36	13.81
	1200	5.01	5.46	5.92	6.37	6.83	7.28	7.74	8.19	8.65	9.10	9.56	10.01	10.47	10.92	11.38	11.83	12.29	12.74	13.20	13.65	14.11

NOTES:
(1) See Section 2.13.4.2.2 of ASME A17.1 Safety Code for Elevators for detail
(2) See Section 2.13.4.2.1 of ASME A17.1 Safety Code for Elevators for detail

Kinetic Energy Formula

$$1/2\left(\frac{M}{32.2}\right)\left(V\right)^2 = 2.5 \text{ ft-lbf}$$

M = Combined Weight of Car and Hoistway Doors and All Attached Equipment
V = Speed in Feet Per Second

Contents
Index
MCE Web

Table 3.4 Side Slide, Nudging Provided

MINIMUM CLOSING TIME FOR SIDE SLIDE DOORS (sec)																						
Door Opening Width (inch)		26	28	30	32	34	36	38	40	42	44	46	48	50	52	54	56	58	60	62	64	66
(1) Code Zone Distance (inch)		22	24	26	28	30	32	34	36	38	40	42	44	46	48	50	52	54	56	58	60	62
(2) Combined Weight of Car and Hoistway Doors and All Attached Equipment (lbs)	100	0.84	0.92	0.99	1.07	1.15	1.22	1.30	1.38	1.45	1.53	1.61	1.68	1.76	1.84	1.91	1.99	2.07	2.14	2.22	2.30	2.37
	150	1.03	1.12	1.22	1.31	1.41	1.50	1.59	1.69	1.78	1.87	1.97	2.06	2.15	2.25	2.34	2.44	2.53	2.62	2.72	2.81	2.90
	200	1.19	1.30	1.41	1.51	1.62	1.73	1.84	1.95	2.06	2.16	2.27	2.38	2.49	2.60	2.70	2.81	2.92	3.03	3.14	3.25	3.35
	250	1.33	1.45	1.57	1.69	1.81	1.94	2.06	2.18	2.30	2.42	2.54	2.66	2.78	2.90	3.02	3.14	3.27	3.39	3.51	3.63	3.75
	300	1.46	1.59	1.72	1.86	1.99	2.12	2.25	2.39	2.52	2.65	2.78	2.92	3.05	3.18	3.31	3.45	3.58	3.71	3.84	3.98	4.11
	350	1.57	1.72	1.86	2.00	2.15	2.29	2.43	2.58	2.72	2.86	3.01	3.15	3.29	3.43	3.58	3.72	3.86	4.01	4.15	4.29	4.44
	400	1.68	1.84	1.99	2.14	2.30	2.45	2.60	2.75	2.91	3.06	3.21	3.37	3.52	3.67	3.83	3.98	4.13	4.28	4.44	4.59	4.74
	450	1.79	1.95	2.11	2.27	2.43	2.60	2.76	2.92	3.08	3.25	3.41	3.57	3.73	3.89	4.06	4.22	4.38	4.54	4.71	4.87	5.03
	500	1.88	2.05	2.22	2.39	2.57	2.74	2.91	3.08	3.25	3.42	3.59	3.76	3.93	4.11	4.28	4.45	4.62	4.79	4.96	5.13	5.30
	550	1.97	2.15	2.33	2.51	2.69	2.87	3.05	3.23	3.41	3.59	3.77	3.95	4.13	4.31	4.49	4.66	4.84	5.02	5.20	5.38	5.56
	600	2.06	2.25	2.44	2.62	2.81	3.00	3.19	3.37	3.56	3.75	3.94	4.12	4.31	4.50	4.68	4.87	5.06	5.25	5.43	5.62	5.81
	650	2.15	2.34	2.54	2.73	2.93	3.12	3.32	3.51	3.71	3.90	4.10	4.29	4.49	4.68	4.88	5.07	5.27	5.46	5.66	5.85	6.05
	700	2.23	2.43	2.63	2.83	3.04	3.24	3.44	3.64	3.85	4.05	4.25	4.45	4.66	4.86	5.06	5.26	5.46	5.67	5.87	6.07	6.27
	750	2.30	2.51	2.72	2.93	3.14	3.35	3.56	3.77	3.98	4.19	4.40	4.61	4.82	5.03	5.24	5.45	5.66	5.87	6.08	6.29	6.49
	800	2.38	2.60	2.81	3.03	3.25	3.46	3.68	3.89	4.11	4.33	4.54	4.76	4.98	5.19	5.41	5.63	5.84	6.06	6.28	6.49	6.71
	850	2.45	2.68	2.90	3.12	3.35	3.57	3.79	4.01	4.24	4.46	4.68	4.91	5.13	5.35	5.58	5.80	6.02	6.25	6.47	6.69	6.91
	900	2.52	2.75	2.98	3.21	3.44	3.67	3.90	4.13	4.36	4.59	4.82	5.05	5.28	5.51	5.74	5.97	6.20	6.43	6.66	6.89	7.11
	950	2.59	2.83	3.07	3.30	3.54	3.77	4.01	4.24	4.48	4.72	4.95	5.19	5.42	5.66	5.89	6.13	6.37	6.60	6.84	7.07	7.31
	1000	2.66	2.90	3.14	3.39	3.63	3.87	4.11	4.35	4.60	4.84	5.08	5.32	5.56	5.81	6.05	6.29	6.53	6.77	7.02	7.26	7.50
	1050	2.73	2.97	3.22	3.47	3.72	3.97	4.21	4.46	4.71	4.96	5.21	5.45	5.70	5.95	6.20	6.45	6.69	6.94	7.19	7.44	7.68
	1100	2.79	3.04	3.30	3.55	3.81	4.06	4.31	4.57	4.82	5.07	5.33	5.58	5.84	6.09	6.34	6.60	6.85	7.10	7.36	7.61	7.87
	1150	2.85	3.11	3.37	3.63	3.89	4.15	4.41	4.67	4.93	5.19	5.45	5.71	5.97	6.23	6.49	6.75	7.00	7.26	7.52	7.78	8.04
	1200	2.92	3.18	3.45	3.71	3.98	4.24	4.51	4.77	5.04	5.30	5.57	5.83	6.10	6.36	6.63	6.89	7.16	7.42	7.69	7.95	8.22

NOTES:
(1) See Section 2.13.4.2.2 of ASME A17.1 Safety Code for Elevators for detail

(2) See Section 2.13.4.2.1 of ASME A17.1 Safety Code for Elevators for detail

Kinetic Energy Formula

$$1/2\left(\frac{M}{32.2}\right)\left(V\right)^2 = 7.37 \text{ ft-lbf}$$

M = Combined Weight of Car and Hoistway Doors and All Attached Equipment
V = Speed in Feet Per Second

TAPS, Traction Auxiliary Power Supply

Functional Test

Mainline Disconnect Verification:

This verifies that the fourth pole of the main line disconnect or micro switch is functional when power is intentionally shut off at the main line disconnect.

1. Verify that BS1 and BS2 are connected to the fourth pole of the main line disconnect.
2. Set the AC/TAPS DISCONNECT switch to the ON position.
3. Shut off power at the main line disconnect.
4. Verify that the car is not energized and remains stopped.

TAPS and Controller Operation Verification:

1. Ensure the main line disconnect is in the ON position.
2. Ensure the AC/TAPS DISCONNECT switch is in the ON position.
3. Ensure the TAPS BYPASS switch is in the NORMAL position.
4. Verify the NORMAL POWER indicator is on.
5. With empty car, move the elevator on inspection slightly above the leveling zone of the floor with the longest floor distance moving in the up direction.
6. Push and hold the test button until TAPS is in backup power mode. Verify the BACKUP POWER indicator is on.
7. Quickly put the elevator back to normal operation.
8. The elevator should begin to move in the up direction until it reaches the floor above. Once the elevator reaches the floor, it shall cycle the door.
9. If TAPS shuts down before the elevator completes the rescue operation due to the timer set in parameter F1-1 “Backup Power Run Time,” extend the timer accordingly and perform the test again.
10. If TAPS shuts down before the elevator completes the rescue operation due to battery voltage drop below F1-5 (error code E-04), let the TAPS charge for 8 hours before performing this test again.
11. If input P3 “Rescue Operation Complete” is used, TAPS shall shut down once the rescue operation is complete and input P3 is energized. This will immediately cancel the parameter F1-1 “Backup Power Run Time.” If the command is not issued to the TAPS unit, please check wiring and controller output.
12. If input P2 “Restart Backup Power Operation” is used, verify by pushing the DOB button in the COP to validate proper wiring and operation. This can be done once TAPS has been shut down by either P3 input or parameter F1-1 “Backup Run Time” having elapsed. TAPS shall then restart when the DOB is pressed and will operate until either P3 is activated or parameter F1-1 has expired.
13. If input P1 “Remote Backup Power Operation” is used, verify correct operation by triggering this input from the appropriate controller output or the source it is wired to. To do this, TAPS shall be on commercial power operation and “Normal Power” indicator shall be lighted. When the P1 input is triggered and held for the duration defined by F1-9 “Commercial Power Loss Detection” (factory default is 2 seconds), TAPS shall proceed to “BACK UP” power operation and indicator BACKUP POWER shall light. TAPS shall then operate until cancelled by either input P3 “Rescue operation Complete” or by parameter F1-1 “Backup Power Run Time” having elapsed. Note that shut down may also be caused by drained/discharged batteries, dead batteries, or an inoperative UPS unit.

Index

Symbols

+24V 2-45, 2-49
+24VINT 2-46

Numerics

1 Bus 2-45
2 Bus 2-23, 2-48, 2-50
2 Bus is Low message 2-52
2 STOP FLG 2-23
2 Stop Operation 2-23
2010 ADA 1-5
24CTP 2-50
24FS 2-50
24HWY 2-50
24V Power Monitor 2-46
24VDC 2-46, 2-50, 2-51
2LS 2-48, 2-50
2LS BUS 2-23
2MV 2-48, 2-51
2MV BUS 2-23

A

A/B/PLD (DLAB) (DLAT) (DLMS) Mismatch Message 2-52
A/B/PLD DLAT Mismatch Message 2-52
A/B/PLD DLMS Mismatch Message 2-52
A-/SPD1 2-45
A+/SPD0 2-45
ABD 2-23, 2-45
ABU 2-23, 2-45
Acceleration 2-11
Access Enable 2-45
Active Faults 1-14, 2-16, 2-32
Actual Direction Display 1-13
ADA 2-23
ADA Car Timer 2-8
ADA Hall Timer 2-8
Address Diagnostics 2-17
Adjusting Floor Heights 2-9
AGND 2-49
Air Conditioned Cabinets 3-2
ALIVE 2-19
Alive Input Low Message 2-53
Alternate
- Acceleration 2-12
- Deceleration 2-12
- Fire Recall Floor 2-5
- Roll Jerk 2-11
- Start Jerk 2-11
- Stop Jerk 2-12

Altitude 1-5
Analog Ground 2-49
Anti-Nuisance 1-6
APS DONE 2-21
APS FAIL 2-19
APS ON 2-19
APS REVD 2-19
Architecture 1-17
ARROW DN 2-21
ARROW UP 2-21
Ascending Car Overspeed Test 1-66
ATD 2-23, 2-45
ATU 2-23, 2-45
Auto Emerg Slew Rate 2-13
Auto Norm Slew Rate 2-13
Auto Slew Filter 2-13
Automatic Fault Bypass 1-6, 2-15
Automatic Mode 2-42
Automatic Modes 1-8
Aux CPI I/Os 2-16
Aux Power
- Complete Message 2-53
- Fail Message 2-53
- Fire I Message 2-53
- Fire II Message 2-53
- Recall Message 2-53

Auxiliary Contactor 2-78
Auxiliary Power Supply 2-19

B

B- 2-45
B+ 2-45
Backup (Alternate) Speed 2-13
Backup Current Settings 1-14, 2-15
Batteries 3-2
Battery 2-41, 3-4
Battery Backed RAM 2-53
BBRAM Read Error Message 2-53
BBRAM Write Error Message 2-53
Blue Event Text = Informational 2-16

Bootload Switches On Message 2-53
Bottom Access Distance 2-9
Bottom Access, DOWN 2-45
Bottom Access, UP 2-45
Bottom Deviation (Edge) Message 2-54
Bottom Floor 2-5
BR 2-48
BR Failed to Turn Off/ON Messages 2-54
Brake
- Contact Monitor 2-46
- Contactor 2-46
- Contactor Power 2-48
- Contactor Proofing Test 1-66
- Coordination 1-54
- Current 2-37
- Drop Delay 2-14
- Enable DC 2-46
- Faults 1-25, 2-46
- Hold 2-37
- Output Monitor 2-75
- Pick 2-37
- Pick Control 2-46
- Pick SW Closed Message 2-54
- Pick SW Flaky Message 2-54
- Pick SW Open Message 2-54
- Pick/Hold Voltages 1-25
- SW 2-19

BREDC 2-46
BRFLT 2-46
BRFLT is On Message 2-54
BRK FLT LED 1-26
BRP 2-46
BRP Failed to Turn Off Message 2-54
BRP Failed to Turn On Message 2-55
BRPK 2-46
Building Security 1-14, 2-14
Building Setup 2-5
Building Setup In-Car Inspection Option 2-45
BUS 1-12
Bus Voltage Testpoints 2-31
Bypass EP Sequencing 2-14
Bypass Faults 2-42
Bypass Faults on Construction Mode 1-22
Bypass PHE 2-6
Bypass SE 2-6
Bypass Stuck DOB 2-6

C

Call Registration 2-15
CAN 2-45, 2-46
- Bus 1-44, 1-47
- Bus Data 2-17
- Bus Termination 1-53
- Bus Viewer 1-16, 2-17
- Termination 1-50

Capture Floor 2-6
Capture Mode Message 2-55
Car
- CALL Buttons 2-35
- Controller, Installation of 1-20
- DELAY 2-21
- Delayed Door Closed Message 2-55
- Delayed Door Open Message 2-55
- Delayed Time 2-8
- Door Bypass 2-41
- GONG 2-21
- Hold Message 2-55
- ID 2-5
- Label 1-13, 2-5
- LANTDN 2-21, 2-23
- LANTUP 2-21, 2-23
- Motion Animation 1-13
- Oscillates at Contract Speed 1-63
- Overshoots 1-63
- Panel Inspection 2-5
- Panel Inspection Inputs 2-5
- Stop SW Bypassed Message 2-55
- Stop SW On Message 2-55
- Stop SW on Re-Level Message 2-55
- to Group Data 2-16
- Top Inspection UP/DOWN 2-45

Car 2 Floor 'nn' Opening 2-17
Car 2 Floor Heights 2-17
Car and Hall Call Registration 2-15
Car Call
- Buttons 2-6
- Canceled Due To 2-17, 2-33
- Disabled Message 2-55
- Timer 2-8

Car Calls 1-12
Car/CWT Buffer 1-68
Car/CWT Safety 1-68
Car/Hoistway Door Bypass Switches 2-60
Cars to Run on EP 2-14
Cartop
- Box Power Control 2-46
- Construct/Bypass Message 2-55
- Construction Message 2-56
- Insp/Bypass Message 2-56
- Inspection 2-45, 2-46
- Inspection Message 2-56

CC Enable Active Off 2-14
CC ENBL1-6 2-19
CC REG 2-21
CC SECURED 2-21
CC24V 1-49, 2-35
CCB Cancels LOT 2-6
CCB Shortens CCT 2-6
CCB Shortens HCT 2-6
CCC Behind Car 2-6
CCC Reversal 2-6
CCF 2-23
CCT 2-23
CDATA 2-45
CDB 2-24
CDB Switch Fault Message 2-56
CDBO 2-24
CDBOB 2-24
CE 1-52
CE Fixture Self-Test 2-43

CE MODE 2-42
Cell Battery Volts Low Message 2-56
Certified Ground 2-31
CFG Err
- 2-Stop Config Message 2-56
- Car Panel Insp Message 2-56
- Controller Type Message 2-56
- Hoist Access Message 2-57
- Invalid Floor Message 2-57
- Landing System Message 2-57

CGED 2-24
CGEU 2-24
Close Limit Time 2-8
COM 1-12, 2-24
Commercial Power Loss Message 2-57
Compliance Test Active Message 2-57
COMPLIANCE TESTING 1-67
CONFIG 2-24, 2-46
CONFIG 01 1-13
- Configure Spare Inputs 2-7
- Elevator Features 2-7

CONFIG 02 1-13
CONFIG 03 1-14
Construction
- & Faults Bypass 1-14, 2-15
- Fault Bypass 1-6, 2-15
- Invalid Message 2-57
- Mode 1-8, 2-42
- Operation 2-15

Contract Overspeed 1-70, 2-13
Contract Ovrspd Message 2-57
Contract Speed 1-23, 1-24, 1-54, 2-13
Controller
- Maintenance 3-2
- Type 2-5
- Will not Answer Hall Calls 1-76

COP 2-24
Copying Files to USB Message 2-57
Correct Speed 2-13
COS 2-24
COS Timer 2-8
Countdown Timer 2-15
Counterweight Position 2-9
CP 2-24
CP DOWN 2-24
CP ENABLE 2-24
CP Ins Stuck Input Flt Message 2-57
CP Ins Stuck Input Message 2-57
CP UP 2-24
CPI Board Address 1-52, 2-36
CPI-2 Board CAN Baud Rate 1-52, 2-36
CPI-2 DIP Switch 1-52, 2-36
CPI-2 Jumpers 2-36
CPU 1-12, 2-24
- Bus Communication 2-17
- BUS, COM Status 2-33
- DIP Switches 2-43
- DIP Switches, 2-position, SW5 2-43
- DIP Switches, 8-position, S2 2-43

CT 2-24
CT Ins Stuck Input Flt Message 2-58
CT Ins Stuck Input Message 2-58
CTEN 2-24, 2-45
CTPR 2-24, 2-46, 2-50
CTST 2-24
CWI 2-24
Cycle Doors 2-14
Cycle Test - "nnn" Message 2-58
Cycle Test M2L Message 2-58
Cycle Test MSAF High Message 2-58
CYCTST 2-24

D

Danger Deceleration 2-12
Danger Roll Jerk 2-12
Danger Start Jerk 2-12
Danger Stop Jerk 2-12
Date and Time 1-13, 1-14, 2-15
DCB 2-19, 2-24
- Cancels HCT 2-6
- Short CCTR 2-6
- Short HCTNCE 2-6, 2-7
- Shortens LOT 2-6

DCF 2-21, 2-24, 2-49
DCL 2-19, 2-24
DCOM 2-46, 2-49
Dead Zone Distance 2-13
Deceleration 2-11
Default Gateway 2-15
DETS 2-24, 2-48
- Delta Distance 2-10
- Delta Speed 2-10
- Distance 2-10
- Speed 2-10
- Switch 2-10

DFE/EB1 2-48
DFE/EB1 Stuck Off Message 2-58
DFE/EB1 Stuck On Message 2-58
DFLT 2-24, 2-46
DFLT is On Message 2-59
DGND 2-49
DHOLD END 2-21
DHOLD ON 2-21
Diagnostics Tree 1-14, 2-16
Dir Pref DLK 2-6
Direction Preference 2-6
Disp ID nn 1-13
Dispatch Load Message 2-59
Dispatcher 1-13, 2-14
Dispatcher Comm Loss Message 2-59
DL01 2-50
DL02 2-50
DLAB 2-24, 2-49
DLAB Open-Running Message 2-59
DLABB 2-24
DLAT 2-24, 2-49
DLAT Open-Running Message 2-59
DLATB 2-24
DLK 2-25
DLM 2-19, 2-25

DLMS 2-25, 2-49
DLMS Open-Running Message 2-59
DLMSB 2-25
DLN 2-25
DLS1 is Low 2-63
DOB 2-19, 2-25
Bypass Message 2-59
Bypass Timer 2-8
Fail Message 2-59
DOF 2-21, 2-25, 2-49
DOL 2-19, 2-25
DOL - DPM Fault 2-60
DOL Low
- DCL Low Message 2-60
- DLAB High Message 2-60
- DLAT High Message 2-60
- DLMS High Message 2-60
- DPM High Message 2-60
- GS High Message 2-60
Door
Bypass 2-41
Bypass Construc Message 2-60
Bypass Inspection Message 2-61
Bypass Switches 1-19
Contact FLT Enabled 2-7
Control 1-14, 2-16, 2-32
Debounce 2-8
Dwell Times 1-15, 2-33
Fault Shutdown Message 2-61
Faults Information 2-59
HOLD 2-19
Hold Message 2-61
Hold Timer 2-8
Interlock Timer 2-8
Lock Bottom String 2-49
Lock Middle String Input 2-49
Lock Status 1-13
Lock String 2-46
Lock Top String Input 2-49
Operator 1-53
Position Monitor Switch 1-53
Status 1-13
Zone, Input 2-45
Door Close 2-17
Button 2-6
Due To 2-33
Fail 'n' Message, n = 1 - 4 2-61
Fault 2-8
Fault Message 2-61
Function 2-49
Door Closing Force 3-5
Door Open 2-17
Button 2-8
Due To 2-33
Fail 2-8
Fail 'n' Message, n = 1 - 4 2-61
Fault 2-8
Fault Message 2-61
Function 2-7, 2-49
Door Operator 2-50
Compatibility 2-49
Door Unintended Motion 2-62
Doors Closed
Not Locked 2-62
Double Ding Down 2-6
Down Emergency Terminal Switch 2-10
Down Emergency Terminal Switch Input 2-48
Down Fast Enable Output 2-48
Down Slow Enable Output 2-48
Down Slow Limit 1 Input 2-48
Down Slow Limit 2 Input 2-48
Down Terminal Limit Input 2-48
Down Terminal Limit Switch 2-64
DPM 1-53, 2-19, 2-25
DPM Low - DLK High 2-62
DPM Open-Running 2-62
DPS- 2-46
DPS+ 2-46
DRDO 2-46
DRDY 2-25, 2-46
DRDY is Off 2-62
DRE 2-25, 2-46
DREB 2-25
Drive
Disable Delay 2-14
On Input 2-62
Response 1-56
RX Communication 2-62
RX Message 2-62
TX Communication 2-62
TX Message 2-62
Type 2-14
DRO 2-25
DRO Dropped Out Message 2-62
DRO Failed to Turn Off 2-62
DRO Failed to Turn On 2-63
DSE/EB2 2-48
DSL 2-25
DSL1 2-48
Delta Distance 2-12
Delta-H Speed 2-12
Delta-L Speed 2-12
Distance 2-12
Position High/Low 2-63
Speed 2-12
Speed High-Lower/High-Upper 2-63
Switch 2-63
DSL2 2-48
Delta Distance 2-9
Delta-H Speed 2-9
Delta-L Speed 2-9
Distance 2-9
Position High/Low 2-63
Speed 2-9
Speed High-Lower/High Upper 2-64
Switch 2-63
DTL 2-25, 2-48
DTL and USLx Are Low 2-64
DTL is Low 2-64
Duplex 1-5

Operation 1-64
Duplex Installation 2-42
Duplicate Car ID 2-64
Duplicate Dispatcher 2-64
Dynamic Braking Transistor Failure (DBRTF) 1-9
DZ 2-25, 2-45
DZF Output Fault (EDGE) 2-64

E

Earthquake
Counterweight Derail 2-19
Normal Mode 2-7
Normal Mode, After Delay 2-7
Normal Mode, Fire Only 2-7
Operation 1-6, 2-65
Recall 2-65
Reset 2-41
Run 2-65
Seismic Sensor 2-20
Shutdown 2-65
Speed 2-13
EB Cycle Test Fault 2-65
EB1 2-48
EB12 2-48
EB1B 2-25
EB2 2-48
EB2A 2-25
EB2BP 2-25
EB3 2-48
EB4 2-48
EB4A 2-25
E-Brake Dropped 2-65
E-Brake Failed to Drop 2-65
E-Brake Failed to Pick 2-65
E-Brake Unexpected Drop 2-65
EF GONG 2-21
Egress Floor 2-5
Electrical 1-5
Governor 1-68
Noise 1-63
Electrostatic Discharge 1-43
Elevator Features 2-6, 2-7
EMDISP 2-19, 2-25
EMDISPOV 2-19
Emerg Pwr & Earthquake 1-15
Emergency
Dispatch 2-66
Operation 1-6
Power 1-14, 2-14
Power ON 2-22
Power Recall 2-21
Power Type 2-14
Power Type 2 2-17
Pwr & EQ 2-16
Stop 2-65
Emergency Brake 2-62, 2-70
Type 2-14
Emissions 1-5
E-Motive 1-52
EMS 2-25
EMS Floor 2-5
EMS Messages 2-66
EMSC BUZZR 2-21
EMSC LIGHT 2-21
EMSC SW 2-19
EMSH LIGHT 2-21
EMSH SW 2-19
EN12016 1-5
Enable DOB on Security 2-14
Enclosure Installation 1-20
EP
AUTO 2-19
CARDONE 2-21
Door Operation 2-14
LIGHT 2-21
LOBBY 2-22
MANUAL 2-19
Messages 2-66
ON 2-22
Recall Floor 2-14
Recall Timeout 2-14
SELECT 2-22
EP1 2-22
RECAL 2-22
EP2 ON 2-22
EP2 RUN 2-22
EPI 2-19
EPI C 2-19
EQ 2-25
BUZZER 2-22
CWT 2-19, 2-25, 2-67
Emergency Stop 2-67
LIGHT 2-22
RST 1-19
SS 2-20, 2-67
EQI 2-25
EQR 2-25
ESC 2-25, 2-48, 2-67
ESC Input Low 2-67
ESCTO.B 2-25
ESD 1-43
ETH 2-26
Ethernet 2-46
Ethernet Error Message 2-67
ETS Overspeed 1-72, 1-75
ETSL Overspeed 1-75
Event
Filter 2-93
Text Color 2-16
Troubleshooting 2-52
Event Log 1-14, 2-16, 2-30, 2-32
Colors 2-16
Messages 2-67
Events
Blue 2-93
Filtering 2-93
Gray 2-93
Red 2-93
Yellow 2-93
Excessive Faults 2-54, 2-68, 2-93

Exit Button 2-2
Export Current Settings to USB Drive 1-14, 1-76, 2-29
Export Events 2-15, 2-30
Export Events to USB Drive 1-14
Export Parameters 2-15

F

F2 2-31, 2-51
F24CTP 2-31, 2-51
F24FS 2-31, 2-51
F24HWY 2-31, 2-51
F24VDC 2-31, 2-51
F2MV 2-31, 2-51
Factory Defaults 2-15
FAN 2-50
FAN LIGHT 2-22
Fan/Light Power Control 2-46
Fault 1-12, 1-19
- Bypass 1-6
- Bypass Jumper 2-15
- Bypass Mode 2-70
- Reset 2-41

FB 2-26
FDL01 2-51
FDL02 2-51
FDLN1 2-31
FDLN2 2-31
FFLO 2-31, 2-51
FGOV 2-31, 2-51
File Transfer 1-76
File Transfer Menu 2-15
File Transfer. 2-29
Fire Code 2-5
Fire Codes 1-5
Fire II Messages 2-68
Fire Messages 2-68
Fire Recall Messages 2-69
Fire Service Phase II 1-8
Firefighter's CALL CANCEL 2-20
Firmware Update 2-69
FL1 2-31
Flags 1-15, 2-32
Flash Fire Hat (MR/HSTWY) 2-5
FLI 2-50
FLN 2-50
FLO 2-26, 2-50
FLO Timer 2-8
Flood Floor 2-5
Flood Operation Messages 2-69
Floor
- Code Invalid 2-70
- Encoding Input 2-20
- Height 2-9
- Label, Per Floor 2-5
- Offset 2-9
- Openings 2-5
- Unintended Motion 2-70

FLPC 2-26, 2-46, 2-50
FLPWR 2-26
FLR GONG 2-22, 2-26
FLT 2-26
FLT BYP 2-26
FLT BYPASS JP Messages 2-70
FLT Bypass Jumper 2-42
Following Error 2-13
FPM 2-26
FR 2-26
FR HAT 2-22, 2-26
FR ISV 2-22
FR RECALL 2-22
FR1
- BUZR 2-22
- BUZZER 2-26
- DONE 2-22
- LIGHT 2-22, 2-26
- OFF 2-20, 2-26
- ON 2-20, 2-26
- ON2 2-20
- RESET 2-20, 2-26

FR2
- CANCEL 2-20
- HOLD 2-20, 2-26
- OFF 2-20, 2-26
- ON 2-20, 2-26
- STATUS 2-22

FRA 2-26, 2-45, 2-68
FRM 2-69
FRS 2-26, 2-45
FRSA 2-26, 2-45
FRSA OTHER 2-20
FRSM 2-26, 2-45
FRSM OTHER 2-20
FSO 2-22
Fuse Types 2-31
FXL1 2-31, 2-51
FXL2 2-31, 2-51

G

GAL MOD 1-2
GAL MOVFR 1-2
Gate Switch 2-26
Gate Switch Input 2-49
GOS 2-26
GOS1 2-51
GOS2 2-51
GOV 2-26, 2-48, 2-51
GOV Input Lo Message 2-70
Governor Overspeed 2-51
Governor Overspeed Switch 2-51
GP PLD 2-26
GPI 2-49
GPO 2-49
Ground 2-31
Grounding 1-20
Group to Car Data 2-16
GS 2-26, 2-49
GS Open-Running 2-70
GSB 2-26

H

Hall Bus
- Inventory 2-17, 2-33
- Test 2-17

Hall Call
- Canceled Due To 2-17, 2-33
- Inventory 2-33
- Loss 1-6
- Node Wiring 1-49
- Statistics Per Hour 2-33
- Test 2-33
- Timer 2-8

Hall Calls 1-12, 1-43
Hall Calls Messages 2-70
HAPS 2-26, 2-51
HC 2-26
HC CANCEL 2-20
HCF 2-26
HCT 2-26
HDATA 2-45
HDB 2-26
HDB Switch Fault 2-70
HDBO 2-26
HDBOB 2-26
Heavy Load Message 2-71
High Speed 2-13
HLI - Heavy Load Input 1-53
Hoist Access Messages 2-71
Hoistmotor Speed 2-13
Hoistway
- Access 2-5
- Door Bypass 2-41
- Door Bypass Switches 2-71
- Setup 2-9

Hoistway Learn 1-10, 1-14, 1-55, 2-15
HOLD Current 1-25
Home Screen 2-2
Hourly Statistics 1-16, 2-17, 2-33
Humidity 1-5
Hydraulic Auxiliary Power Supply 3-10

I

I/O Terminal Mapping Flt Message 2-72
ICE-COP-2 1-18
ICEN 2-26
ICEN/IN1 2-5, 2-45
ICPD 2-27
ICPD/IN3 2-5, 2-45
ICPU 2-27
ICPU/IN2 2-5, 2-45
ICTD 2-27, 2-45
ICTU 2-27, 2-45
Idle Door Open 2-7
IGBT FLT LED 1-26
Ignore DOB (Door Open Button) Input 2-6
Ignore PHE (Photo Eye) Input 2-6
Ignore SE (Safety Edge) Input 2-6
Import & Apply Settings from USB Drive 1-14, 2-29
Import Parameters 2-15
IN1H 2-27
IN2H 2-27
INA 2-27, 2-45
INAO 2-27
In-Car Construct/Bypass 2-71
In-Car Construction 2-71
In-Car Insp/Bypass 2-71
In-Car Inspection 2-45
In-Car Inspection DOWN 2-45
In-Car Inspection Enable 2-45
In-Car Inspection Message 2-71
INCP 2-27, 2-45
INCT 2-27, 2-46
INCTD 2-27
INCTO 2-27
INCTU 2-27
IND 2-27
IND SERV 2-20, 2-27
Independent Mode 2-71
Independent Service 1-8
Input Mismatch Faults 2-52
Input/Output Assignment 2-3, 2-7
Inputs 2-7
INSP/NORM Mode 2-41
Inspect Overspeed 2-13
Inspect Slew Filter 2-14
Inspect Slew Rate 2-13
Inspection
- Enable 2-41
- Fault Bypass 1-6, 2-15
- Inputs 2-7
- Invalid Message 2-72
- Mode 2-42
- Operation 1-5
- Overspeed 1-69
- Speed (Fast) 2-13
- Speed (Slow) 2-13
- UP/DOWN 2-41

Installation Checklist 1-20
Intended Direction Display 1-13
Invalid Access Zone Message 2-72
Invalid Mode Message 2-72
Inventory Hall Calls 1-45, 1-48, 2-33
IO1 - IO8 2-46
IP 2-27
IP Address 2-15
Itinerary Manager 1-15, 2-16, 2-17

J

Job Department and Year 2-5
Job Info and Labels 2-5
Job Name 2-5
Job Number 2-5
JP1, CDBPTST 2-42
JP10, A/B 2-42
JP11, ENCODER INTERFACE 2-42
JP12, CAN Termination 2-42
JP2, HDBPTST 2-42
JP4, FLT Bypass 2-42
JP5, PGM SOURCE 2-42

JP6, EDGE/ENCODER 2-42
JP7, EDGE/ENCODER 2-42
JP8, PGM SOURCE 2-42
JP9, ENCODER INTERFACE 2-42

K

KEB
- Car Oscillates 1-63
- Car Overshoots 1-63
- Contract Speed 1-58
- Drive Response 1-56
- Initial Speed Calibration 1-26
- Speed Changes Felt Excessively 1-63

KEB Setup Overview 1-24

L

L24V 2-45
Landing System 1-14, 2-16, 2-32
- ID 2-9
- Learn 1-10, 1-14, 1-55, 2-15
- Type 2-5
- Utilities 1-14, 2-15
- View 2-15

Lanterns 1-52
Latch Door Close 2-7
Latch Door Open 2-7
Lead/Acid Batteries 3-2
Learn Modes 1-10
- Hoistway Learn 1-10
- Landing System Learn 1-10
- Terminal Switch Learn 1-10

Learn Operation
- Repeat if S-Curve Adjusted 1-10

Level Distance 2-13
Level Overspeed 2-13
Level Speed 2-13
Leveling Overspeed Message 2-72
Leveling Speed 1-58
Light Load Anti-Nuisance 2-72
LLI 2-27
- Light Load Input 1-53

LLI Anti-Nuisance 2-6
LLI Anti-Nuisance Message 2-72
Load Disp 1-53, 2-20
Load Heavy 1-53, 2-20
Load Hvy 1-53
Load Light 2-20
Load Light Input 1-53
Load Light Input Active 2-6
Load Over 1-53, 2-20
Load Over 2 2-20
Load Ovr 1-53
Load Ovr2 1-53
Load Weighers 1-53
Lobby Call Timer 2-8
Lobby Floor 2-5
LOCKS 1-12
Logical Position Display 1-13
LOP 2-27
LOPM 2-27, 2-46, 2-50
LOT 2-27
LS Config Error Message 2-72
LS-EDGE
- Access Ovrspd Message 2-73
- Boot Correction Message 2-72
- Boot with Error Message 2-72
- Count Error Message 2-73
- Floor Checksum Message 2-73
- Inspect Ovrspd Message 2-73
- Learn Active Message 2-73
- Position Error Message 2-73

LS-EDGE Installation 1-27–1-35
LS-EDGE Landing System 1-27–1-35
LS-RAIL Installation 1-36–1-42
LS-RAIL Landing System 1-36–1-42

M

M2L Input Mismatch Message 2-73
M2L is Low Message 2-73
Machine Rm Inspection 1-19
Machine Room
- Construct Message 2-73
- Enable 1-19
- Inspection 2-41
- Inspection Message 2-74

Magnetek
- Car Oscillates 1-63
- Car Overshoots 1-63
- Contract Speed 1-58
- Drive Response 1-56
- Drive Response Adjustment 1-56
- Initial Speed Calibration 1-26
- Speed Change Felt Excessively 1-63

MAIN CLOCK 2-27
Main CPI IOs 2-16
Main Fire Recall Floor 2-5
Maintenance
- Control Plan 3-1
- Controller, Bi-annual 3-3
- Controller, Monthly 3-2
- Controller, Yearly 3-4
- Intervals 3-1
- SmarTraq Door Operator 3-5
- Statistics 1-16

Maintenance Statistics 2-17, 2-33
Manual Acceleration 2-12
Manual Deceleration 2-12
Manual Roll Jerk 2-12
Manual Start Jerk 2-12
Manual Stop Jerk 2-12
MC-CPI (n) is Offline Message, n = 1-4 2-74
MC-CPI Board 1-49
MC-CPI-2 1-18, 1-49, 2-27, 2-35
MCE SmarTraq 1-2
MCE Traction Auxiliary Power Supply 1-10
MCE Universal 1-2
MDRE 2-27
MDRE Failed to Turn Off Message 2-74
MDRE Failed to Turn On 2-74

MEB1 2 2-27
MEB2 Redundancy Fault Message 2-74
MEB3 2-27
MEB3 Failed to Turn Off Message 2-74
MEB3 Failed to Turn On Message 2-74
MEB3/4 Redundancy Fault 2-74
Menu Tree 2-4
Message SPA
    PLD HDBO Mismatch 2-82
Micro-SDRAM Card 2-80
Microsoft Word 2-93
Middle Door Lock String 2-59
MLT 2-27
Motion I/O 1-14, 2-16, 2-32
Motor
    Contactor Power 2-48
    Contactor Proofing Test 1-65
    Time Limit 2-8
    Time Out Message 2-74
    Time Out Shutdown Message 2-75
Movement Stalled Message 2-75
MPME 2-27
MPSBR 2-27
MPSBR Failed to Turn Off Message 2-75
MPSBR Failed to Turn On Message 2-75
MRDN 2-27
MREN 2-27
MRIN 2-27
MRINO 2-27
MRUP 2-27
MSAF 2-27
MSAF Input Failure Message 2-75
MSAF Is High Message 2-75
MSAF is Low Message 2-75

N

NDF 2-49
NDF OUT 2-27
NEC 250, Earth Ground 1-20
NEC, U.S. 1-5
Network Settings 1-14, 2-15
Next Destination Display 1-13
No Door Zone Fault Message 2-76
No Leveling Fault Message 2-76
NOT USED 2-19, 2-21, 2-23
NTS1 Lower Overspeed 1-75
NTS1 Upper Overspeed 1-75
NTS2 Lower Overspeed 1-75
NTS2 Upper overspeed 1-75
NUDG 2-22, 2-27
    BUZER 2-22, 2-27
Nudging
    Front 2-49
    Message 2-76
    Sense 2-6
Number of Cars 2-5
Numeric Entry Screen 2-2

O

OBD 1-11, 2-2
Oil Tank Temp Shutdown 2-45
On Board Display 1-11
On/Off Status of Dedicated Inputs 2-16
On/Off Status of Dedicated Outputs. 2-16
On/Off Status of Door Control Inputs/Outputs 2-16
On/Off Status of Landing System Inputs/Outputs 2-16
On/Off Status of Programmable Inputs 2-16
On/Off Status of Programmable Outputs 2-16
Open Doors 2-14
Open Limit Time 2-8
Orange Event Text = Error 2-16
Oscilloscope 2-33
Other Car Settings 1-16, 2-17
Out of Service message 2-76
Outputs 2-7
Overlay 2-14
Overload 2 Message 2-76
Overload Message 2-76
OVL - Overload Input 1-53

P

Paper Insulator 2-41
Parameter
    Load Error Message 2-76
    Range Fit Message 2-76
    Selection Screen 2-3
    Storage Fault Message 2-77
Park at Secured Floor 2-14
Parking Timer 2-8
Passcode 1-1, 1-76, 2-5
Passcode Enabled Message 2-77
Passenger Mode 1-8
Passenger Mode Message 2-77
PFG 2-27
PFG ENABL 2-20
PHE 2-20, 2-27
    Anti-Nuisance 2-6
    Anti-Nuisance Disabled 2-77
    Anti-Nuisance Message 2-77
    Bypass Message 2-77
    C 2-20
    CUT 2-20
    Fail Message 2-77
    Shortens CCT 2-6
Photo Eye 2-6, 2-8
Physical Switches 1-59
PICK_ONLY 1-25
Pit Flood 1-6
PLD 2-27, 2-77
    & Processor Resets 2-41
    Diagnostics Tree 2-32
    Flags 2-17
    Inputs 2-17
    Numeric 2-17
    Outputs 2-17
    Read Error Message 2-82
    RX Communication Message 2-77
    RX Message 2-77
    TX Communication Message 2-77
    TX Message 2-77

Write Fault (Edge) 2-77
PM 2-48
PM Failed to Turn Off Message 2-77
PM Failed to Turn On Message 2-78
PME 2-27
PMEB 2-28
PMEP 2-28
PMP 2-28, 2-46
PMP Failed to Turn Off Message 2-78
PMP Failed to Turn On Message 2-78
Pollution 1-5
Position Indicators 1-52
Positioning Message 2-78
Power Input 1-3, 1-5
Pref Car to Run on EP2 2-14
Pre-Open Doors 2-6
Pretest 1-5, 1-19, 2-41
Primary Dispatcher 1-64, 2-13
Primary Motor Contactor 2-46
Primary Parking Door Operation 2-5
Primary Parking Floor 2-5
Processing Car Calls Message 2-78
Profile Advance 1-57, 2-13
Profile Scale 2-13
Profile Transitions 2-11
Programmable Input 2-45
Programmable Input/Outputs 2-46
Programmed Inputs 2-16, 2-32
Programmed Outputs 2-16, 2-32
Proximity Distance 2-13
PSN 2-28
PTI 2-20, 2-28
PTI C 2-20
PTI Recall Message 2-78
PTI Shutdown Message 2-78

Q

Quad Sensor Loss Message 2-78
Quadrature 2-45
Quadrature Loss CH-B Message 2-78
Quadrature Offset CH-B Message 2-78

R

R2 2-20
Random Calls Generator Message 2-78
Random Car Calls Gen Message 2-79
Random Hall Calls Gen Message 2-79
Recall
1 Floor 2-6
Car Calls Dispensation 2-15
Complete Message 2-79
Done Message 2-79
Done Switch 1 (2, 3, or 4) Message 2-79
Door Operation 2-15
Latch Switch 2-15
On Switch 1 (2, 3 or 4) Message 2-79
Override Independent 2-15
Override Security 2-15
Recall Floor 2-15
S1 2-20
S2 2-20
S3 2-20
S4 2-20
SW Bypassed Message 2-79
Switch 2-20
Switch 1 (2, 3, or 4) Message 2-79
Switches 1-14
Recalling Message 2-79
Recommended Terminal Switch Configuration 1-59, 1-72
Reduced Stroke Buffers 1-59, 1-72
Redundancy Faults 2-52
Relevel Distance 2-13
Relevel Operation 1-55
Remote Calls Override Sec 2-14
Repeat Learn Operation 1-10
Restore Backup Settings 1-14, 2-15
Restore Factory Settings 1-14, 2-15
RG 2-48
RGOK 2-28, 2-45
Ride Quality 1-62
Riser Assignment 1-44, 1-47
Roll Jerk 2-11
Rope Gripper 2-48
Rope Gripper OK 2-45
RSTA 1-19
RSTB 1-19
RSTC 1-19
RSTP 1-19
Run-Related Statistics 2-33

S

SAF EDGE C 2-21
SAFA 2-28
SAFB 2-28
SAFC 1-22, 1-65, 2-48, 2-49
SAFC.P 2-28
SAFCT 2-28
SAFE EDGE 2-20
Safety 1-4, 1-12
Edge 2-8
String Test 1-65
Tests 1-67, 2-15
SAFH 1-65, 2-48
SAFH Input Low Message 2-80
SAFH.B 2-28
SAFP 2-28
SANE(x) 2-28
Save Button 2-2
Save Parameters 1-11
Saving Dispatch Params Message 2-80
Saving Other Car Params Message 2-80
SC-3HN 1-18, 1-43, 2-23
SC-3HN Addresses 1-44
SC-3HN-2 1-18, 1-46
SC-3HN-2 Addresses 1-47
SCE-BRK 1-3
SCE-CON 1-18, 2-28, 2-38
SCE-CON Connector Assignments 2-38
SCE-CPU 1-3, 1-19, 2-30, 2-40

SCE-CPU Battery 2-41
SCE-CPU Jumpers 2-42
SCE-HVI 1-3, 2-47
SCE-UPD 1-3, 1-21, 2-50
Scope 2-18, 2-33
Screen Freeze 2-2
S-Curve 1-57, 2-11
SD Card 2-30
SD Card Error Message 2-80
SD File System Error Message 2-80
SD MICRO 2-46
SE 2-28
SE Bypass Message 2-80
SE Bypass Timer 2-8
SE Fail Message 2-80
Secondary Parking Door Operation 2-5
Secondary Parking Floor 2-5
SECRTY OV 2-21
Secure Independent 2-14
Security CC Enable Active Off 2-14
Security Disabled Message 2-80
Security Enabled 2-14
Select From Landing System Signals 2-18
Select From Programmed Inputs 2-18
Select From Programmed Outputs 2-18
Select From System Inputs 2-18
Select From System Outputs 2-18
Selective Collective 1-5
Serial Hall Calls 1-43, 1-46
Serial PI Configuration 1-52
SERV IN 2-22
SERV OUT 2-23
Set Date, Time, Day of the Week 2-15
SHLD 2-28
Short Door Timer 2-8
Shortcuts 2-4
Shorts to Ground 1-21
SHUTDOWN 2-23
Simplex 1-5, 1-13
Simplex Car ID Error Message 2-80
Sleep Mode Timer 2-8
Slew Rate 2-13
SmarTraq Door Operator 3-5
SmarTraq Door Operator Maintenance 3-5
SMI 2-21, 2-88
Smoothing Tape Edges 1-28
Software Update 2-43
Software Version 2-17
SPA 2-28
- DETS Position High Message 2-80
- DETS Position Low Message 2-80
- Door Dwell Times 2-16
- Flags 2-16
- LS-EDGE is Offline Message 2-81
- Motion Numeric 1-15, 2-16
- Motion Shutdown Message 2-81
- Numeric 1-15, 2-16
- PLD ABD Mismatch Message 2-81
- PLD ABU Mismatch Message 2-81
- PLD ATD Mismatch Message 2-81
- PLD ATU Mismatch Message 2-81
- PLD CDBO Mismatch Message 2-81
- PLD CTEN Mismatch Message 2-81
- PLD DETS Mismatch Message 2-81
- PLD DZ Mismatch Message 2-81
- PLD ESC Mismatch Message 2-82
- PLD ICEN Mismatch Message 2-82
- PLD ICPD Mismatch Message 2-82
- PLD ICPU Mismatch Message 2-82
- PLD ICTD Mismatch Message 2-82
- PLD ICTU Mismatch Message 2-82
- PLD INA Mismatch Message 2-82
- PLD INCP Mismatch Message 2-82
- PLD INCT Mismatch Message 2-82
- PLD MREN Mismatch Message 2-82
- PLD Osc Stopped Message 2-82
- PLD Read Error 2-82
- PLD SAFC Mismatch Message 2-82
- PLD UETS Mismatch Message 2-83
- SPB is Offline Message 2-83
- SPB, SPC, PLD Diagnostics 2-32
- SPB/PLD CDB Mismatch Message 2-83
- SPB/PLD GS Mismatch Message 2-83
- SPB/PLD HDB Mismatch Message 2-83
- SPC is Offline Message 2-83
- UETS Position High Message 2-83
- UETS Position Low Message 2-84
- UETS Speed High Message 2-84

Spare I/O Assignment 2-7
Spare Inputs 2-7
Spare Outputs 2-7
SPB 2-28
- DETS Position High Message 2-84
- DETS Position Low Message 2-84
- DETS Speed High Message 2-81, 2-84
- Flags 2-16
- Inputs 2-16
- Inspect Ovrspd Message 2-84
- LS-EDGE is Offline Message 2-84
- Motion Shutdown Message 2-84
- Numeric 2-16
- Outputs 2-16
- Parameter Update Message 2-85
- PLD DSL1 Mismatch Message 2-85
- PLD DSL2 Mismatch Message 2-85
- PLD DTL Mismatch Message 2-85
- PLD MRDN Mismatch Message 2-85
- PLD MRIN Mismatch Message 2-85
- PLD MRUP Mismatch Message 2-85
- PLD USL1 Mismatch Message 2-85
- PLD USL2 Mismatch Message 2-85
- PLD UTL Mismatch Message 2-85
- Powerup/Reset Message 2-84
- SPA Comm Sync Message 2-85
- SPA is Offline Message 2-86
- SPC Comm Sync Message 2-86
- SPC is Offline Message 2-86
- UETS Position High Message 2-86
- UETS Position Low Message 2-86
- UETS Speed High Message 2-86

SPC 2-28
3HN Comm Loss Message 2-86
CAN 3 Comm Loss Message 2-87
CAN Comm Loss Message 2-86
Flags 2-16
Inputs 2-16
Numeric 2-16
Outputs 2-16
SPA is Offline Message 2-87
SPB is Offline 2-87
Started Up Message 2-86
SPD(n) 2-28
Speed
and Acceleration Control 1-52
Changes Felt Excessively in Car 1-63
Display 1-13
Drop Delay 2-14
Pick Delay 1-54, 2-14
Standard Acceleration 2-11
Standard Deceleration 2-11
Standard Enclosure 1-3
Standard Roll Jerk 2-11
Standard Start Jerk 2-11
Standard Stop Jerk 2-11
Start Jerk 2-11
Status
Info 2-33
Information 1-13, 2-5
of Dedicated Inputs 2-16
of Dedicated Outputs 2-16
of Door Control Inputs/Outputs 2-16
of Landing System Inputs/Outputs 2-16
of Programmable Inputs 2-16
of Programmable Outputs 2-16
STD 2-21, 2-28
Steel Tape 1-28
Stick Alignment 1-31
Stop Jerk 2-11
Stopping Accuracy 3-2
STU 2-21, 2-28
Stuck Car Call Message 2-87
Stuck Door Open Button Message 2-87
Stuck Door Zone Fault Message 2-87
Stuck Down Hall Call Message 2-87
Stuck Insp Input 2-7
Stuck Leveling Fault Message 2-87
Stuck PHE Timer 2-8
Stuck Photo Eye Message 2-88
Stuck Safe Edge Message 2-88
Stuck Sensor (Edge) Message 2-88
Stuck Up Hall Call Message 2-88
Subnet Mask 2-15
Supported Door Operators 1-2
Suspension Integrity Message 2-88
Suspension Means Integrity Fault 2-88
SW5, DIP Switch 2-43
System Control Parameters 2-13, 2-14
System Inputs 2-16, 2-32
System Outputs 2-16, 2-32
System Timers 2-8

T

Tape Cleaning 1-28
Tape Tension 1-30
TAPS 1-10
Testing 3-10
Temperature 1-5
Terminal Switch Configuration 1-27
Terminal Switch Learn 1-10, 1-60, 2-15
Terminal Switch Learn Message 2-88
Terminal Sync (Edge) Message 2-88
Terminate the CAN 2-36
Test 1-5, 2-28
Hall Calls 1-45, 1-48, 2-33
Mode 1-9, 2-41
Mode Message 2-89
Speed 1-67
Type 1-67
Test/Pretest 1-19, 2-41
Thermal Overload 2-45
Top Access Distance 2-9
Top Access, DOWN 2-45
Top Access, UP 2-45
Top Deviation (Edge) Message 2-89
Top Floor 2-5
Touchscreen 2-2
Touchscreen Locks up 2-2
TP1 2-49
TP2LS 2-49
TPEB3 2-49
TPEB34 2-49
TPEB4 2-49
TPMSAF 2-49
TR_HY 2-46, 2-56
Traction 2-28
Traction Auxiliary Power Supply Testing 3-10
Traction Loss Message 2-89
Traction/Hydro Default Determination 2-46
Troubleshooting Example 2-52

U

U/DETS Option 2-10
U/DETS-LS Option 2-10
U/DETS-LS Overspeed 2-10
U/DETS-LS Speed High Message 2-89
U/DSL1 Option 2-12
U/DSL2 Option 2-9
U/DTL Distance 2-9
U/DTL Limit Option 2-9
UCF 2-28
UETS 2-28, 2-48
UETS Delta Distance 2-10
UETS Delta Speed 2-10
UETS Distance 2-10
UETS Speed 2-10
UETS Switch 2-10
UFE/PM 2-48
UFE/PM Stuck Off Message 2-89
UFE/PM Stuck On Message 2-89
UIM 2-28

UIM RST 1-19, 2-28
UIMR 2-28
UL508C 1-5
ULM 2-21, 2-28
Undo 2-2
Unintended Motion 1-66, 2-14
Unintended Motion Reset 2-41
Unknown Fault Message 2-89
Up Emergency Terminal Switch 2-10
Up Emergency Terminal Switch Input 2-48
Up Fast Enable Output 2-48
Up Slow Enable Output 2-48
Up Slow Limit 1 Input 2-48
Up Slow Limit 2 Input 2-48
Up Terminal Limit Input 2-48
USB 2-28, 2-46
USB Drive 2-29
USB Drive Inserted 2-89
USB Drive Removed 2-89
USB File System Error Message 2-89
uSD 2-28
USE/BR 2-48
    Stuck Off Message 2-89
    Stuck On Message 2-90
User Defaults 2-15
USL1 2-48
    Delta Distance 2-12
    Delta-H Speed 2-12
    Delta-L Speed 2-12
    Distance 2-12
    is Low Message 2-90
    Position High Message 2-90
    Position Low Message 2-90
    Speed 2-12
    Speed High-Lower Message 2-90
    Speed High-Upper Message 2-90, 2-91
USL2 2-48
    Delta Distance 2-9
    Delta-H Speed 2-9
    Delta-L Speed 2-9
    Distance 2-9
    Position High Message 2-90
    Position Low Message 2-90
    Speed 2-9
USLx 2-28
USLx and DSxL are Low Message 2-91
UTILS Menu 2-15
UTILS, Safety Test 1-65
UTL 2-28, 2-48
UTL and DSLx are Low Message 2-91
UTL and DTL are Low Message 2-91
UTL is Low Message 2-92

V

Version Information 2-17
Virtual Switches 1-59

W

Waiting for In-Car SW Message 2-92
Warning Flts Bypass Message 2-92
Wire Separation 1-21

X

X1B 2-51
X2B 2-51
XD1 2-51
XD2 2-51
XL1 2-51
XL2 2-51

Y

Yellow Text = Fault 2-16