Control User Guide

NE200 / NE300

High Performance Vector Control Drive

5 YEAR WARRANTY

Part Number: 0478-0710-04 Issue: 4

Compliance Information

Manufacturer: Nidec Control Techniques Limited ("we", "our")
Registered office: The Gro, Newtown, Powys, SY16 3BE United Kingdom
Registered in: England and Wales, company registration number 01236886
Manufacturer's EU Authorised Representative: Nidec Netherlands B.V., Kubus 155, 3364 DG Sliedrecht, the Netherlands, registered at the Dutch Trade Register under number 33213151; Tel. +31 (0)184 420 555, info.nl@mail.nidec.com

Documentation and user software tools

Manuals, datasheets and software that we make available to users of our products can be downloaded from: **http://www.drive-setup.com**

Warranty and liability

The contents of this Manual are presented for information purposes only, and while every effort has been made to ensure their accuracy, they are not to be construed as warranties or guarantees, express or implied, regarding the products or services described herein or their use or applicability. All sales are governed by our terms and conditions, which are available on request. We reserve the right to modify or improve the designs, specifications or performance of our products at any time without notice. For full details of the warranty terms applicable to the product, contact the supplier of the product.

In no event and under no circumstances shall we be liable for damages and failures due to misuse, abuse, improper installation, or abnormal conditions of temperature, dust, or corrosion, or failures due to operation outside the published ratings for the product, nor shall we be liable for consequential and incidental damages of any kind.

Environmental management

In accordance with SJ/T11364 see Appendix D for details.

Copyright and trade marks

Copyright © 2 August 2021 Nidec Control Techniques Limited. All rights reserved.

No part of this Manual may be reproduced or transmitted in any form or by any means including by photocopying, recording or by an information storage or retrieval system, without our permission in writing.

The Nidec logo is a trade mark of Nidec Corporation. The Control Techniques logo is a trade mark owned by Nidec Control Techniques Limited. All other marks are property of their respective owners.

Contents

1 Safety information 3
1.1 Warnings, Cautions and Notes 3
1.2 Use 3
1.3 Installation 3
1.4 Wiring 3
1.5 Operation 3
1.6 Maintenance & Inspection 3

2 Product introduction 4
2.1 Product nameplate description 4
2.2 Model description 4

3 Wiring 5
3.1 Wiring diagram of system 5
3.2 Description of peripheral devices for main circuit .5
3.3 Attention for Main Circuit Wiring 6

4 Installation 8
4.1 Environment 8
4.2 Mounting direction and space 8
4.3 Wiring preparation for drive 8
4.4 Terminal diagram of main circuit 11
4.5 Control terminal wiring 14
4.6 Functions of control circuit terminals 16
4.7 Control board schematic drawing 22
4.8 NE300 advanced control PCBA diagram 24
4.9 Wiring of control circuit 25

5 Operation and application 28
5.1 Keypad 28
5.2 Function code viewing and modification 29
5.3 Display status of keypad 30
5.4 Password Setting 30
5.5 Typical application 30

6 Parameters 32
6.1 Group 0 Basic Function 32
6.2 Start and stop group (F1) 39
6.3 Auxiliary running function group (F2) 43
6.4 Vector Control Parameters (F3) 51
6.5 V/F Control Parameters (F4) 61
6.6 Motor parameters group (F5) 65
6.7 Input terminals group (F6) 70
6.8 Output terminals group (F7) 81
6.9 PID Parameters (F8) 88
6.10 PLC and Multi-steps group (F9) 94
6.11 Wobble frequency running group (FA) 97
6.12 Fixed-length control group (Fb) 98
6.13 Protection and fault parameters group (FC) 99
6.14 Communication parameters group (Fd) 103
6.15 Operation interface & display group (FE) 105
6.16 Running history record group (FF) 106
6.17 Protection Parameters (FP) 109

7 Fault information and trouble shooting 111
7.1 Fault information and solutions. 111
7.2 Warning information 113
7.3 The general fault diagnosis and solutions 113

8 Routine Repair and Maintenance 114
8.1 Routine maintenance 114
8.2 Periodic maintenance 114
8.3 Component replacement 115

9 Technical data and model selection 116
9.1 Technical features 116
9.2 NE200 Technical data 117
9.3 NE300 Technical data 118
9.4 Product Dimensions and weight 120
9.5 Keypad 125
9.6 Braking Resistor and Unit 126
9.7 Model selection of system 131

10 Options 133
10.1 Options 133
10.2 Guidance for reactor and filter selection 145

EU Declaration of Conformity

1. Product model

NE series variable speed drives and accessories

2. Name and address of the manufacturer

Manufacturer	Authorised representative in the EU
Leroy Somer Electro-Technique (Fuzhou) Co., Ltd. SZGM 1st Floor Machine Building Yanxiang Sci & Tech Park, No.11 Gaoxin Xi Road, Guangming District, Shenzhen 518107 China	Nidec Netherlands B.V. Kubus 155 3364 DG Sliedrecht Netherlands

3. Responsibility

This declaration is issued under the sole responsibility of the manufacturer.

4. Object of the declaration

Model number	Interpretation	Format: NEaaa-bcdddde
aaa	Control Type	200, 300, 400, 600
b	Voltage Rating	2 = 200 V, 4 = 380 V
c	Voltage Phase	S = Single phase, T = Three phase
dddd	Power Rating	Example 0022 = 2.2 kW
e	Drive Type	G = Constant Torque, P = Fan and Pump

The model number may be followed by other characters that do not affect the ratings.

Accessories

Option modules for NE300/600	303PU02, NE30-I/O Lite, NE30-I/ORelay, NE30-ZS01, NE30-AN01, NE30-SP01, NEF-CCLINK, NEF-Profibus, NEF-Profinet, NEF-TCP, B602PG03A, B602PG04A, B602PG02A
Keypads	NEF-LED01, NEF-LCD01

5. The object of the declaration is in conformity with the relevant European Union harmonisation legislation

Low Voltage Directive (2014/35/EU)
Electromagnetic Compatibility Directive (2014/30/EU)
Restriction of Hazardous Substances Directives (2011/65/EU and 2015/863/EU)
Regulation of 2019/1781 of directive 2009/125/EC (Energy related products)

6. References to the relevant harmonised standards used

The drive products listed above have been designed and manufactured in accordance with the following European harmonised standards:

EN 61800-5-1:2007	Adjustable speed electrical power drive systems - Part 5-1: Safety requirements - Electrical, thermal and energy
EN 61800-3:2018	Adjustable speed electrical power drive systems - Part 3: EMC requirements and specific test methods

7. Signed for and on behalf of:

Zane Zheng
Director of Research and Development
Leroy Somer Electro-Technique (Fuzhou) Co., Ltd
Shenzhen Guangming Branch office

Date: 18th July 2023
Shenzhen, China

1 Safety information

1.1 Warnings, Cautions and Notes

WARNING

A Warning contains information which is essential for avoiding a safety hazard.

CAUTION

A Caution contains information which is necessary for avoiding a risk of damage to the product or other equipment.

NOTE

A Note contains information which helps to ensure correct operation of the product.

1.2 Use

This series of drive is used to control the variable speed operation of three-phase motor and cannot be used for single-phase motor or other applications. Otherwise, drive failure or fire may be caused. This series of drive cannot be simply used in the applications directly related to the human safety, such as medical equipment. This series of drive is produced under strict quality management system. Redundancy or bypass solution is necessary if the drive failure may cause severe accident or loss.

1.3 Installation

If the drive is found to be damaged or parts missing, the drive cannot be installed. Otherwise, accident may be caused. When handling and installing the product, please hold the product from bottom. Do not hold the enclosure only. Otherwise, your feet may be injured, and the drive may be damaged because of dropping. The drive shall be mounted on the fire-retardant surface, such as metal, and kept far away from the inflammables and heat source. Keep the drilling scraps from falling into the inside of the drive during the installation; otherwise, drive failure may be caused. When the drive is installed inside the cabinet, the electricity control cabinet shall be equipped with fan and ventilation port. And ducts for radiation shall be constructed in the cabinet.

1.4 Wiring

The wiring must be conducted by qualified electricians. Otherwise, there exists the risk of electric shock or drive damage. Before wiring, confirm that the power supply is disconnected. Otherwise, there exists the risk of electric shock or fire. The grounding terminal PE must be reliably grounded, otherwise, the drive enclosure may become conductive. To ensure the safety, the drive and the motor must be grounded. Please do not touch the main circuit terminal. The wires of the drive main circuit terminals must not contact the enclosure. Otherwise, there exists the risk of electric shock. The connecting terminals for the braking resistor are (+) and PB. Please do not connect terminals other than these two. Otherwise, fire may be caused.

The power supply cannot connect to output terminals U-V-W, otherwise, the drive will be damaged. It is forbidden to connect the output terminal of the drive to the capacitor or LC/RC noise filter with phase lead, otherwise, the internal components of the drive may be damaged Please confirm that the power supply phases, rated voltage are consistent with that of the nameplate, otherwise, the drive may be damaged. The wires of the main circuit terminals and the wires of the control circuit terminals shall be laid separately or in a square-crossing mode, otherwise, the control signal may be interfered. When the length of the cables between the drive and the motor is more than 100 m, it is suggested to use output reactor to avoid the drive failure caused by the over-current of the distribution capacitor. The drive which equipped with DC reactor must connect with DC reactor between the terminal of P1, (+) otherwise the drive will not display after power on.

1.5 Operation

Power supply can only be connected after the wiring is completed and the cover is installed. It is forbidden to remove the cover in live condition; otherwise, there exists the risk of electric shock. When auto failure reset function or restart function is set, isolation measures shall be taken for the mechanical equipment, otherwise, personal injury may be caused. When the drive is powered on, even when it is in the stop state, the terminals of the drive are still live. Do not touch the drive terminals; otherwise electric shock may be caused. The failure and alarm signal can only be reset after the running command has been cut off. Otherwise, personal injury may be caused.

Do not start or shut down the drive by switching on or off the power supply, otherwise the drive may be damaged. Before operation, please confirm if the motor and equipment are in the allowable use range, otherwise, the equipment may be damaged. The heat sink and the braking resistor have high temperature. Please do not touch such devices; otherwise, you may be burnt.

When it is used on lifting equipment, mechanical contracting brake shall also be equipped. Please do not change the drive parameter randomly. Most of the factory set parameters of the drive can meet the operating requirement, and the user only needs to set some necessary parameters. Any random change of the parameter may cause the damage of the mechanical equipment. In the applications with mains frequency and variable frequency switching, the two contactors for controlling the mains frequency and variable frequency switching shall be interlocked.

1.6 Maintenance & Inspection

In the power-on state, please do not touch the drive terminals; otherwise, there exists the risk of electric shock. If cover is to be removed, the power supply must be disconnected first. Wait for at least 10 minutes after power failure or confirm that the CHARGE indicator is off before maintenance and inspection to prevent the harm caused by the residual voltage of the main circuit electrolytic capacitor to persons. The components shall be maintained, inspected or replaced by qualified electricians.

The circuit boards have large scale CMOS IC. Please do not touch the board to avoid the circuit board damage caused by static electricity.

2 Product introduction

2.1 Product nameplate description

Figure 2-1 Nameplate

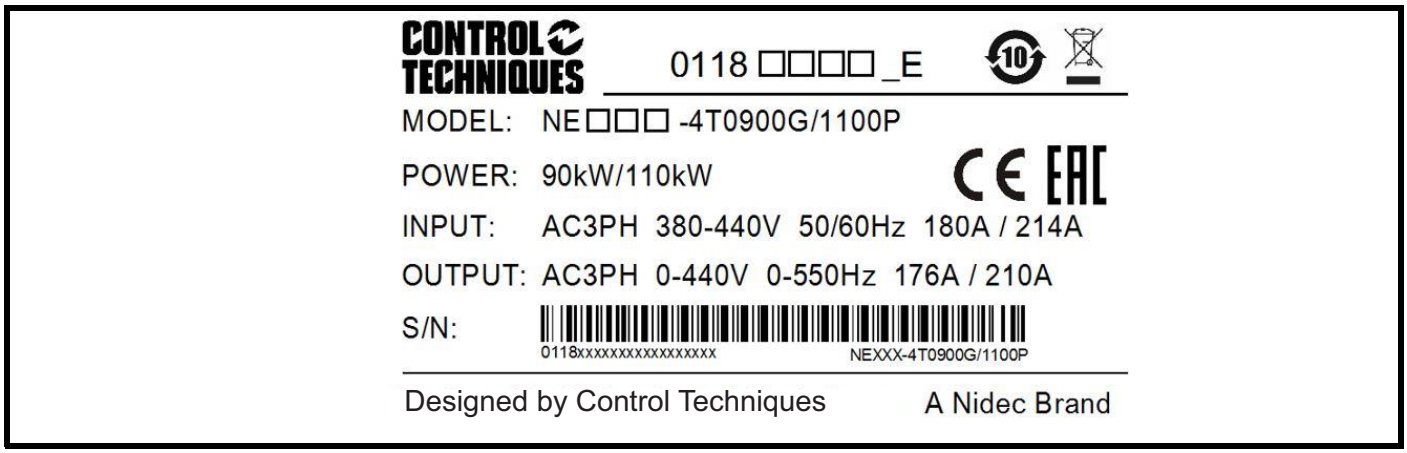

2.2 Model description

The digits and letters of the drive model number on the nameplate indicate information such as the product series, power supply class, power ratings and software / hardware versions.

NE300-4T0300G/0370P means this model can be used as 30 kW heavy duty and 37 kW normal duty.

Figure 2-2 Product model description

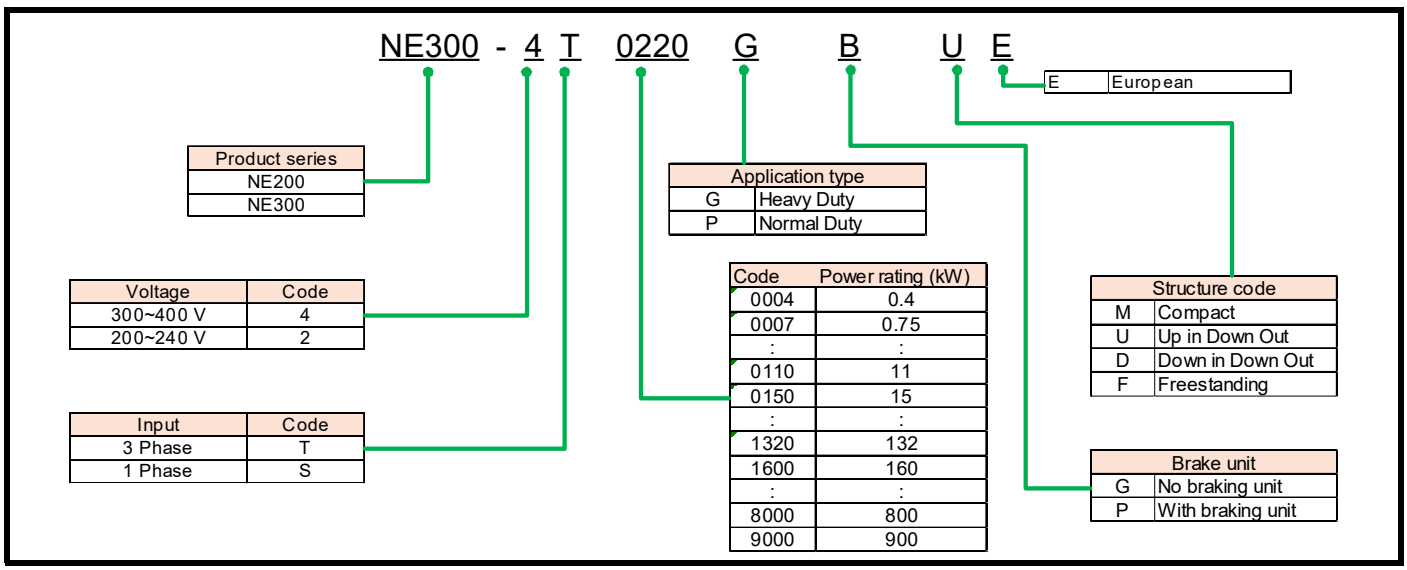

European versions of the NE200 are fitted with the NE200-HW-24 control board which allows the use of PNP digital inputs.

European versions of the NE300 are fitted with the 303PU02 advanced control board to allow the use of PNP digital inputs.

3 Wiring

3.1 Wiring diagram of system

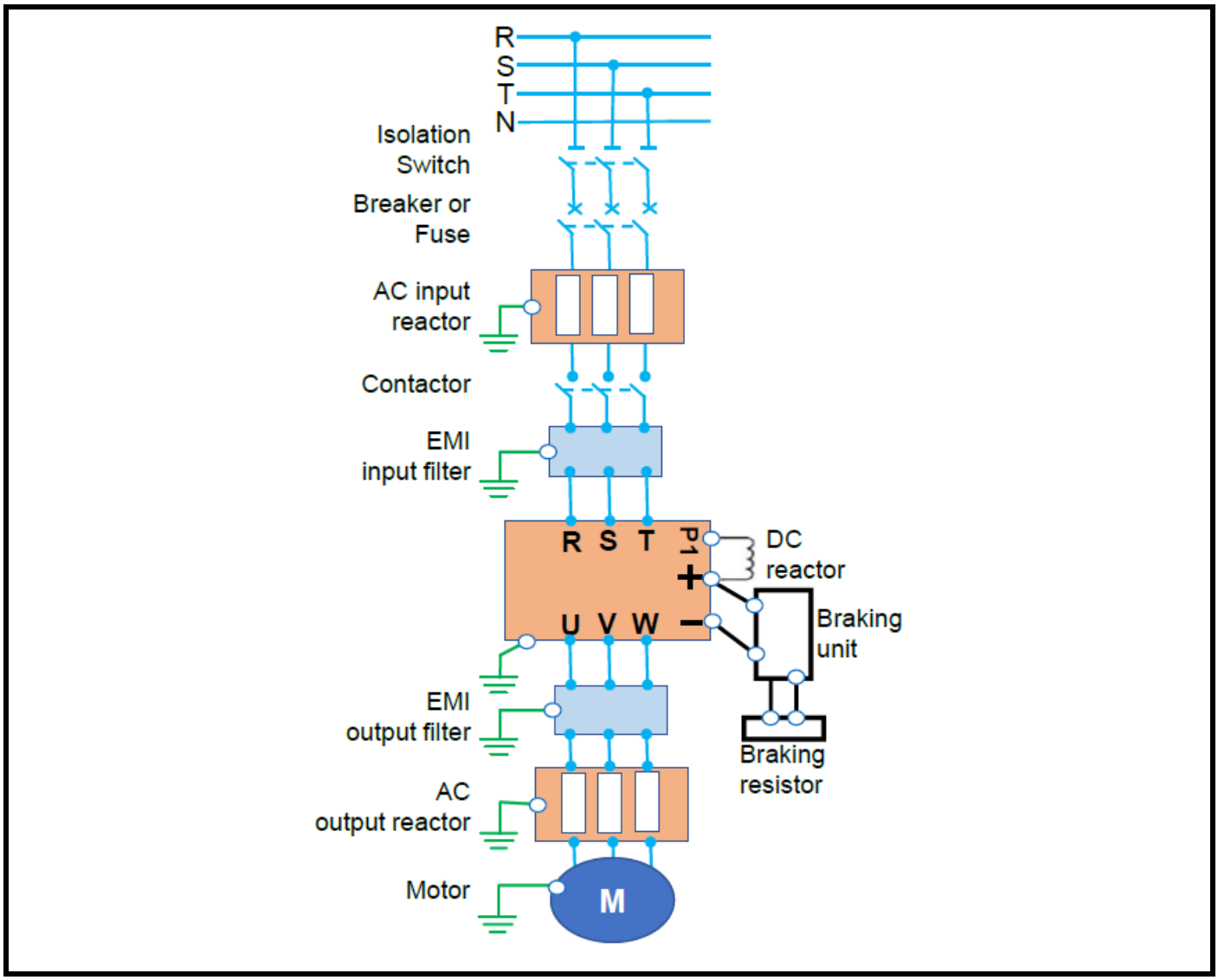

3.2 Description of peripheral devices for main circuit

Circuit breaker

The capacity of the circuit breaker shall be 1.5 to 2 times the rated current of the drive. The time features of the circuit breaker shall fully consider the time features of the drive overload protection.

Leakage circuit breaker

Because the drive output is the high-frequency pulse voltage, there will be high-frequency leakage current. Specialized leakage circuit breaker shall be installed at the input end of the drive. B type leakage circuit breaker is suggested, and the leakage current value shall be set as 300 mA.

Contactor

Frequent open and close of contactor will cause drive failure, so the highest frequency for the open and close of contactor shall not exceed 10 times/hour. When braking resistor is used, to protect the braking resistor from over-heat damage, thermal protection relay shall be installed to control the disconnect of the contactor at power supply side.

Input AC/DC reactor

The drive power supply capacity shall be more than 600 kVA or 10 times of the drive capacity.

If there is switch type reactive-power compensation capacitor or load with silicon control at the same power line, there will be high peak current flowing into drive power input circuit, causing the damage of the rectifier components.

When the voltage unbalance of the three-phase power supply exceeds 3 %, the rectifier component will be damaged.

The input power factor of the drive is required to be higher than 90 %.

In case of above situations, install the AC reactor at the input end of the drive or DC reactor to the DC reactor terminal.

Input noise

The input noise filter can reduce the noise that flows from the power supply to the drive or the drive to power supply.

An external EMC filter is required to meet category C3 requirements in accordance with IEC61800-3:2017. (See section 10.2.4 on page 152). The filter must be reliably grounded and the distance between the filter and the drive must be less than 30 m.

Thermal protection relay

Although the drive has motor overload protection function, when one drive drives two or more motors or multi-pole motors, to prevent the motor over temperature failure, thermal protection relay shall be installed between the drive and each motor, and the motor overload protection parameter FC.00 shall be set as “0” (motor protection disabled).

Output noise filter

When the noise filter is applied to the output side of drive, the conduction and radiation interference can be reduced.

Output AC reactor

When the cable connecting the drive and the motor is longer than 100 m, it is suggested to install AC output reactor to suppress the high-frequency oscillation to avoid the damage to motor insulation, large leakage current and frequent drive protective actions.

3.3 Attention for Main Circuit Wiring

3.3.1 Power Supply Wiring

The power supply cable must not be connected to the drive output terminals otherwise, the internal components of the drive will be damaged.

To facilitate the input side over current protection and power failure maintenance, the drive shall connect to the power supply through the circuit breaker or leakage circuit breaker and contactor.

Please confirm that the power supply phases, rated voltage are consistent with that of the nameplate, otherwise, the drive may be damaged.

3.3.2 Motor wiring

The output terminals should not be short circuited or connected to ground otherwise the drive could be damaged.

There are output short circuit and ground fault trips to help protect the drive.

Avoid short circuits between the output cable and the drive enclosure, otherwise there is the risk of electric shock.

It is forbidden to connect the output terminals of the drive to the capacitor or LC/RC noise filter with phase lead, otherwise, the internal components of the drive may be damaged.

When contactor is installed between the drive and the motor, it is forbidden to switch on/off the output contactor during the running of the drive; otherwise, there will be large current flowing into the drive, triggering the drive protection action.

Length of cable between the drive and motor. If the cable between the drive and the motor is too long, the higher order harmonic leakage current will cause impact on the drive and the peripheral devices. It is suggested that output AC reactor be installed when the motor cable is longer than 100 m, and that switching frequency be set as follows:

Cale length between drive and motor	< 50 m	< 100 m	> 100 m
Switching frequency (F0.015)	< 10 kHz	< 6 kHz	< 4 kHz

3.3.3 Grounding wiring

The drive will produce leakage current. The higher the switching frequency is, the larger the leakage current will be. The leakage current of the drive system is more than 3.5 mA, and the exact value of the leakage current is determined by the site conditions. To ensure the safety, the drive and the motor must be grounded.

The grounding resistance shall be less than 10 Ohm. For the grounding wire diameter requirement, refer to section 9.7 *Model selection of system*

Do not share grounding wire with the welding machine and other power equipment.

In applications with more than 2 drives, keep the grounding wire from forming a loop.

Figure 3-1 Grounding wiring

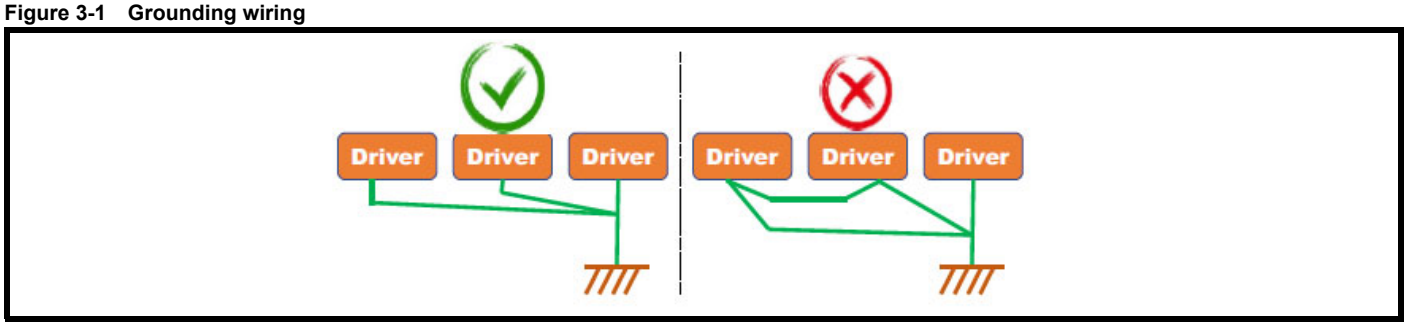

3.3.4 Countermeasures against conduction and radiation interference

Figure 3-2 Countermeasures against conduction and radiation interference

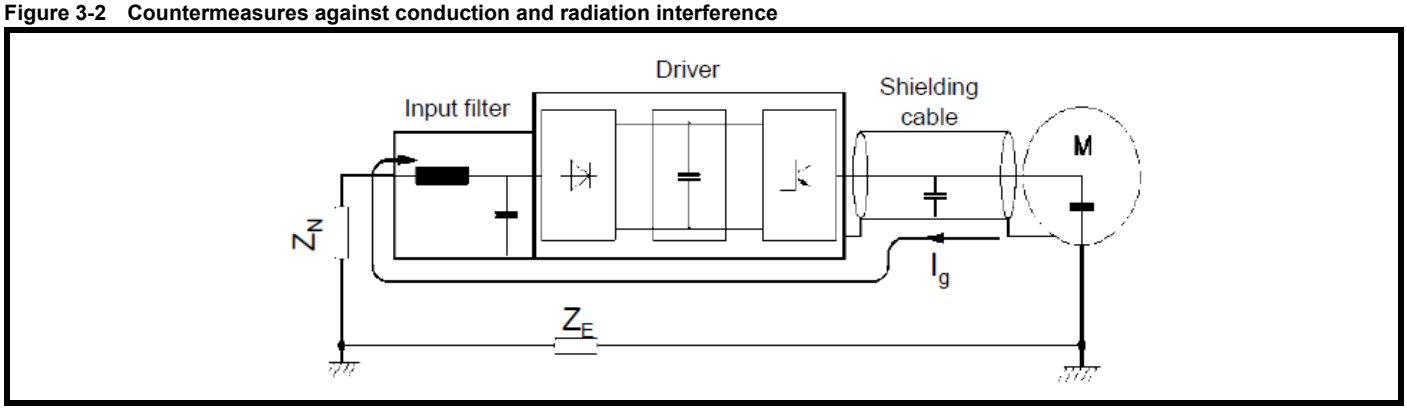

When the input noise filter is installed, the wire connecting the filter to the drive power input terminal shall be as short as possible.

The filter enclosure and mounting cabinet shall be reliably grounded to reduce the back-flow impedance of the noise current Ig.

The wire connecting the drive and the motor shall be as short as possible. The motor cable adopts 4-core cable, among which the grounding wire shall be one end grounded at the drive side, the other end connected to the motor enclosure.

The motor cable shall be sleeved into the metal tube.

The input power wire and output motor wire shall be kept away from each other if possible.

The equipment and signal cables vulnerable to interference shall be kept far away from the drive.

Key signal cables shall adopt shielding cable. It is suggested that the shielding layer shall be grounded with 360-degree grounding method and sleeved into the metal tube. The signal cable shall be kept far away from the drive power input wire and output motor wire. If the signal cable must cross the power input wire and output motor wire, they shall be laid orthogonal.

When analog input of voltage or current is adopted for remote frequency setting, twisted shielding cable shall be used. The shielding layer shall be connected to the grounding terminal PE of the drive, and the signal cable shall be no longer than 50 m.

The wiring of TA/TB/TC shall be separated from wiring of other main circuit terminals.

It is forbidden to short circuit the shielding layer and other signal cables or equipment.

4 Installation

4.1 Environment

Avoid installing the product in the sites with oil mist, metal powder and dust.

Avoid installing the product in environments with hazardous, corrosive, combustible or explosive gases or liquids.

Avoid installing the products in salty sites.

Do not install the product in direct sunlight.

Do not mount the product on combustible materials, such as wood.

Keep any drilling scraps from falling into the drive during installation.

Mount the product vertically in the electric control cabinet, mount the cooling fan or air conditioner to prevent the ambient temperature from rising to above 40 ºC.

For the sites with harsh environment, it is recommended to mount the drive heat sink outside the cabinet.

4.2 Mounting direction and space

In order not to reduce the drive cooling effect, the drive must be mounted vertically, and certain space must be maintained, as shown in Figure 4-1(1)

Figure 4-1 Mounting direction and space / installation diagram (Measurements shown in mm)

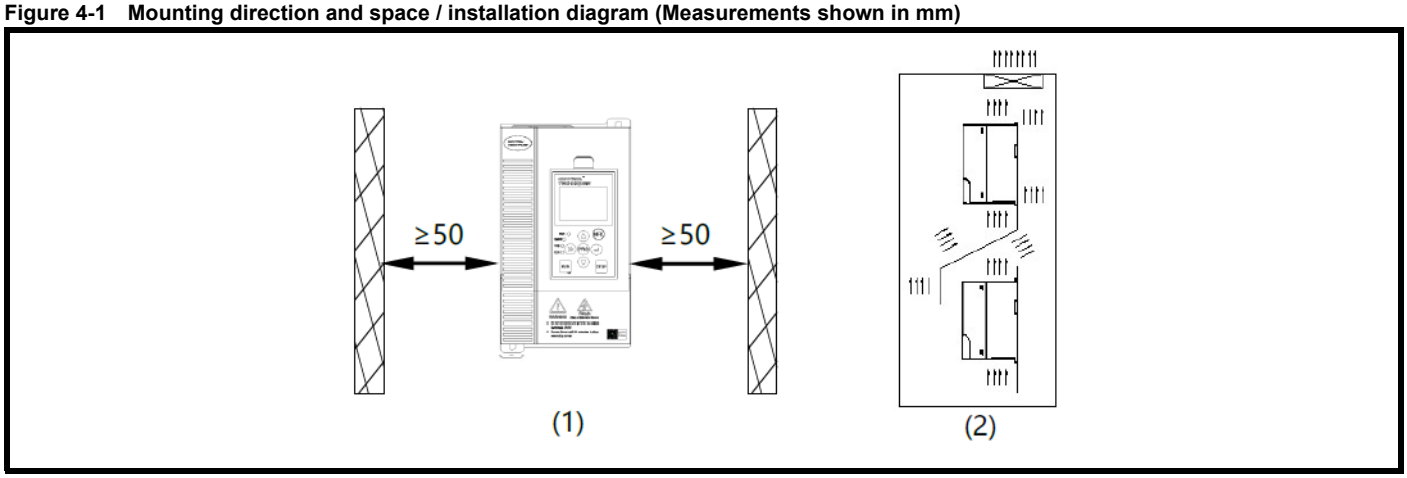

NOTE

When installing multiple drives vertically, above and below each other, the air deflector is required as Figure 4-1(2)

4.3 Wiring preparation for drive

4.3.1 NE200 wiring preparation

Figure 4-2 NE200 2P 200 V 0.4~2.2 kW (GB)/3P 400 V 0.75 (GB)~5.5 kW (PB)

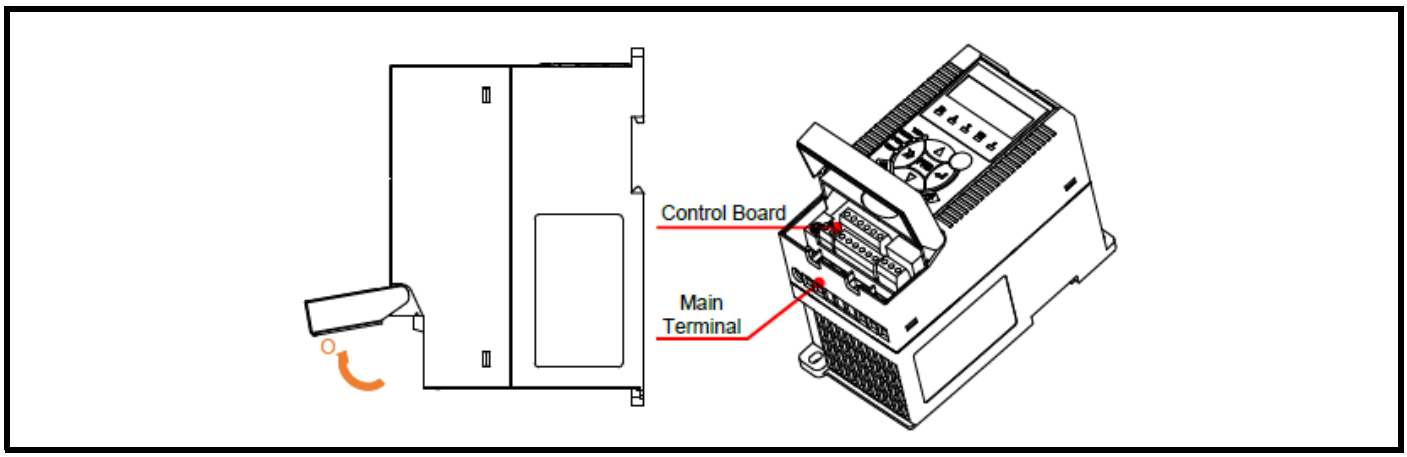

NOTE

Wiring preparation: Open cover along the ‘O’ direction, close it along the opposite direction, see Figure 4-2.

4.3.2 NE300 wiring preparation

1. NE300 wiring preparation for the plastic enclosure drive

Figure 4-3 NE300 3P 400V 1.5~11kW(GB)/2.2~15kW(PB) /3P 220V 0.7~5.5kW(GB)

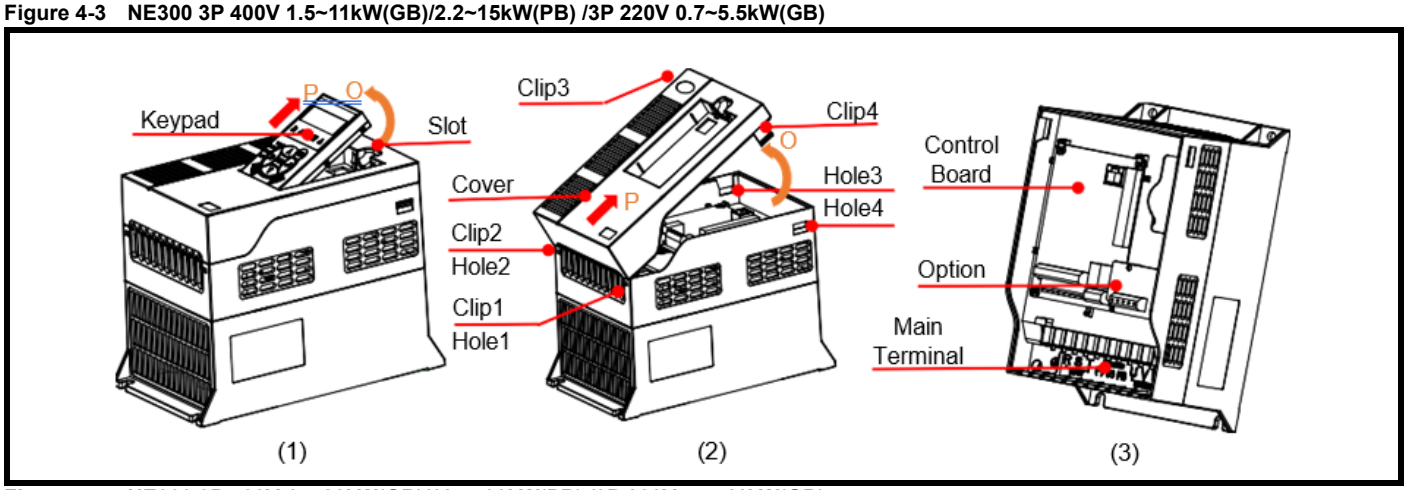

Figure 4-4 NE300 3P 400V 15~22kW(GB)/18.5~30kW(PB) /3P 200V 7.5~11kW(GB)

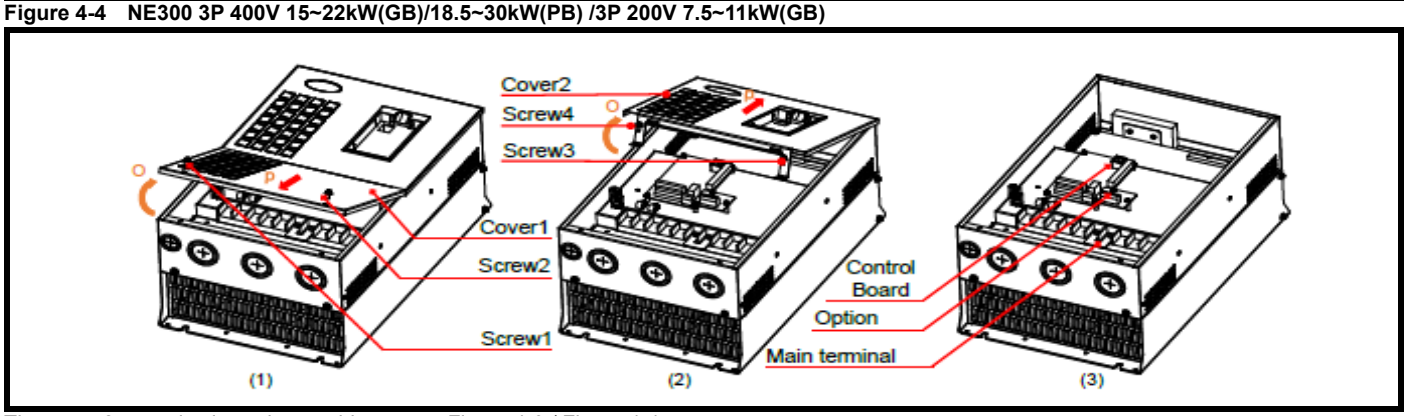

There are 2 type plastic enclosure drivers, see Figure 4-3 / Figure 4-4

- Dismantled/mounted keypad: Push out keypad like Figure 4-3 (1),then take off it along the 'P' direction. Mount it along the opposite direction.
- Wiring preparation (Figure 4-3): Loosen the clip 3/4, then open along the 'O' direction, take off along the 'P' direction. Take off along the opposite direction.
- Wiring preparation (Figure 4-4): Loosen the clip 1/2, then open along the 'O' direction, take off cover1 along the 'P' direction. Loosen the clip 3-6

2. NE300 Metal-sheet enclosure type A

Figure 4-5 NE300 3P 400V 30~250kW(G)/37-280kW(P) /3P 220V 15~45kW(G)

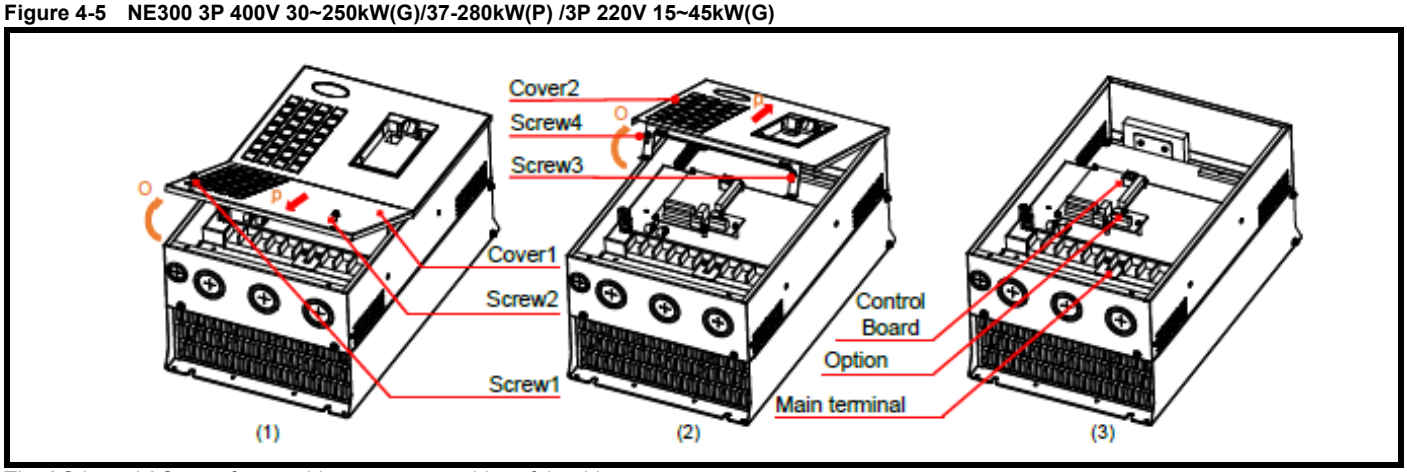

The AC-in and AC-out of some drives are at two sides of the drive

- Dismantling cover1: dismantle the screw 1/2, open cover1 along 'O' direction, and take off it along 'P' direction.
- Dismantling cover2: dismantle the screw 3/4, open cover2 along 'O' direction, take off it along 'P' direction.

3. NE300 Metal-sheet enclosure type B

Figure 4-6 NE300 3P 400V 160~315kW(G)185~355(P)

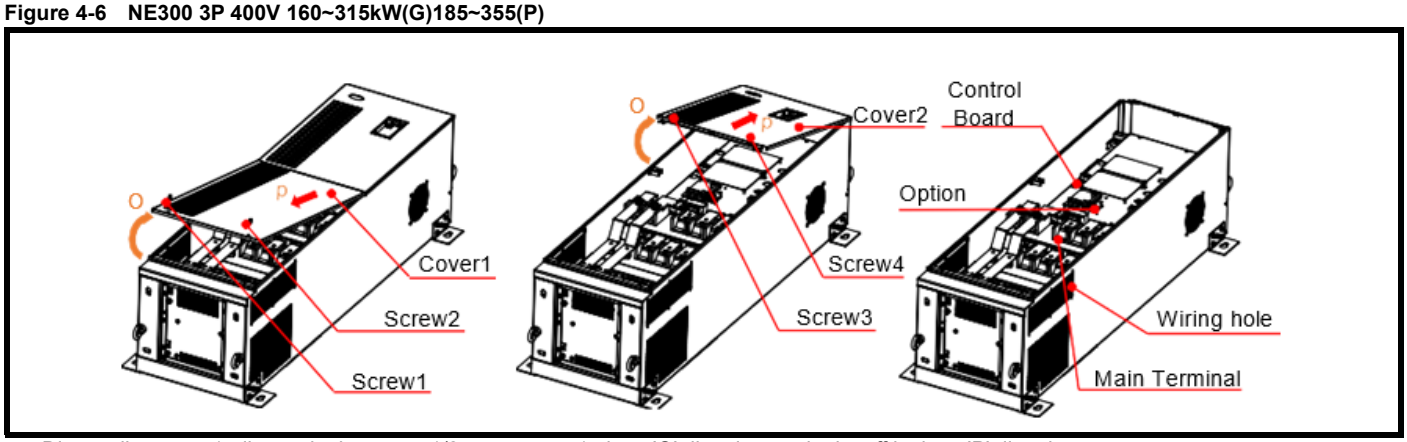

- Dismantling cover1: dismantle the screw 1/2, open cover1 along 'O' direction, and take off it along 'P' direction.
- Dismantling cover2: dismantle the screw 3/4, open cover2 along 'O' direction, take off it along 'P' direction.
- Wiring holes are located on 2 sides of the drive. Break these to create holes for wiring.

4. NE300 Metal-sheet enclosure type C

Figure 4-7 NE300 3P 400V 355~500kW(G)/400~560(P)

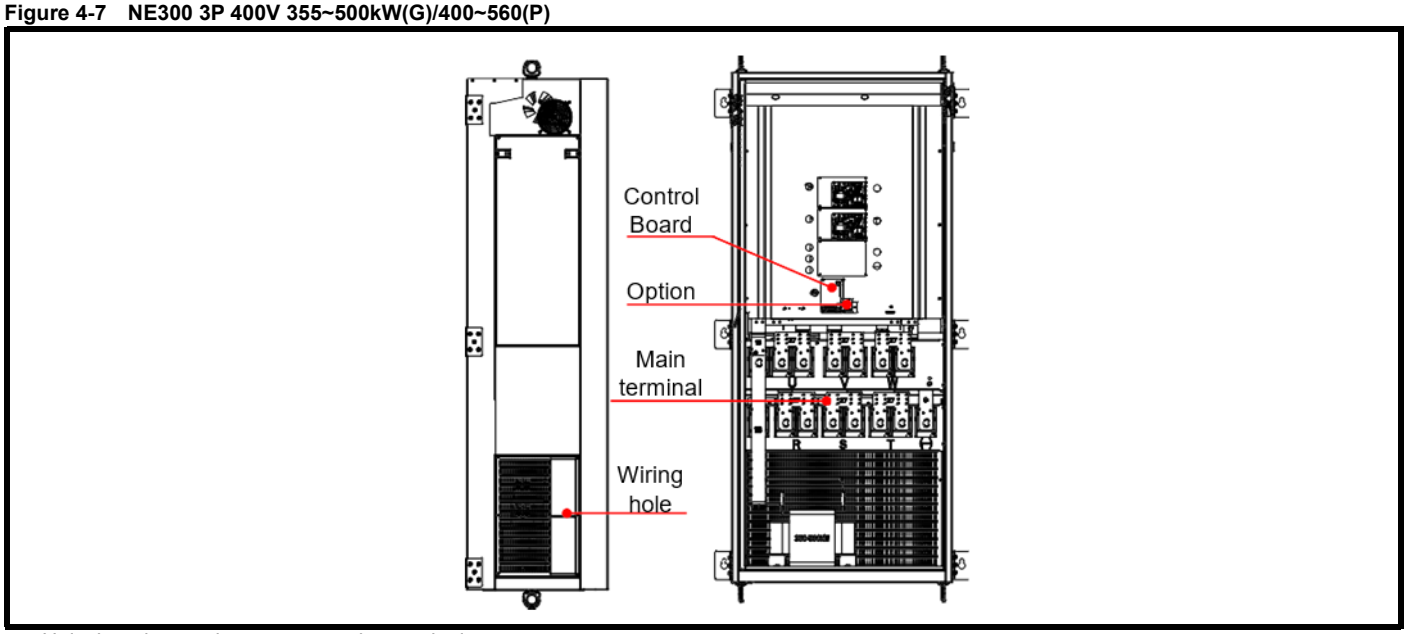

- Unlock and open door to access the terminals.
- The power cable entry on the sides of the drive are designed to be break-outs.

5. NE300 Metal-sheet enclosure type D

Figure 4-8 NE300 3P 400V 560~800kW(G)/630~900kW(P)

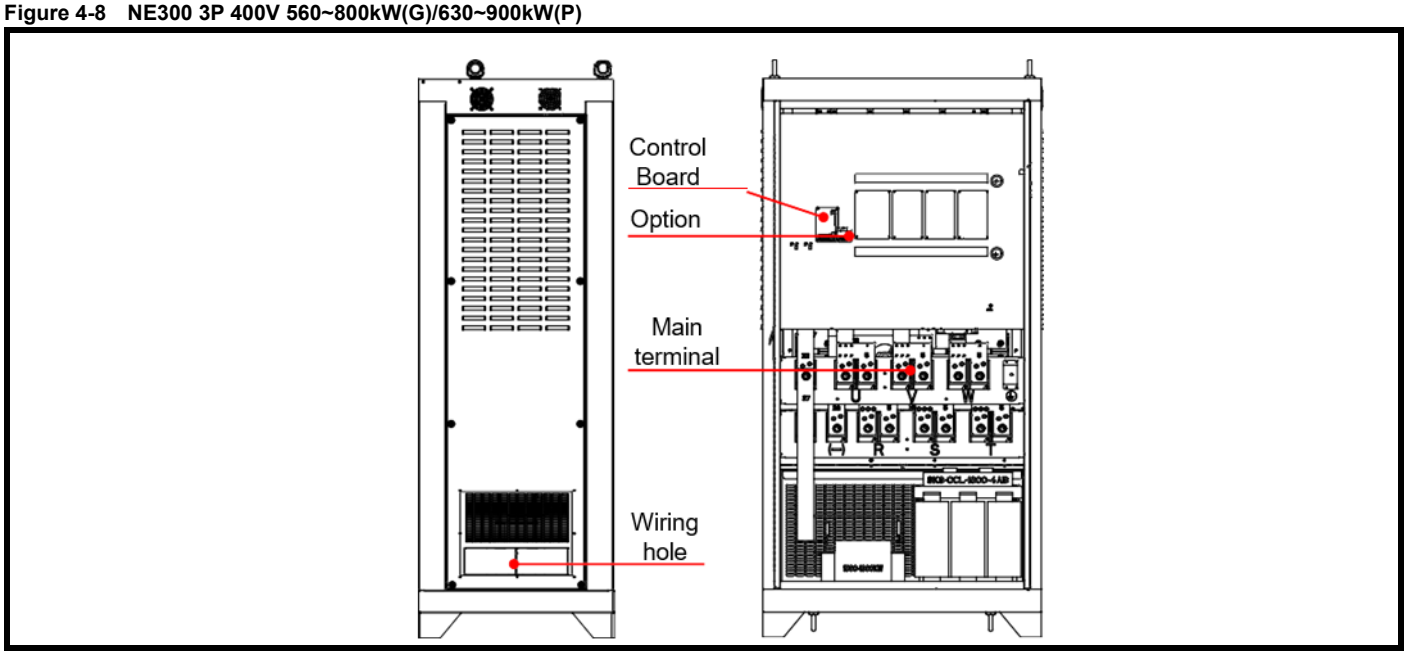

- Unlock and open door to access the terminals.
- The power cable entry on the sides of the drive are designed to be break-outs.

4.4 Terminal diagram of main circuit

4.4.1 NE200-4T0007G/0015PB~4T0022GB-M/2S0004GB~2S00015GB

Terminal diagram of main circuit	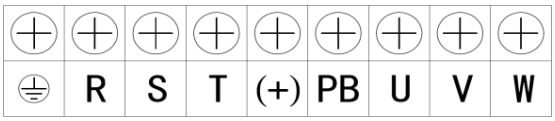
Terminal Symbol	Terminal description
⏚	Grounding terminal PE
R, S	Single-phase AC input terminals
R, S, T	Three-phase AC input terminals
(+), PB	Terminals reserved for braking resistor
U, V, W	Three-phase AC output terminals

4.4.2 NE200-4T0015GB~4T0040GB/4T0055PB/2S0022GB

Terminal diagram of main circuit	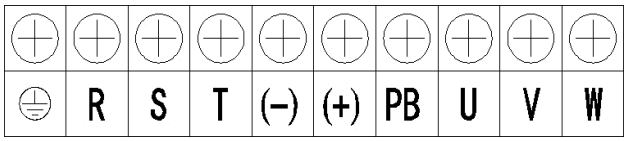
Terminal Symbol	Terminal description
⏚	Grounding terminal PE
R, S	Single-phase AC input terminals
R, S, T	Three-phase AC input terminals
(+), (-)	DC bus - + terminals for common bus DC input
(+), PB	Terminals reserved for braking resistor
U, V, W	Three-phase AC output terminals

4.4.3 NE300-4T0015G/0022PB~4T0220G/0300PB /NE300-2T0007G~2T0110GB

Terminal diagram of main circuit	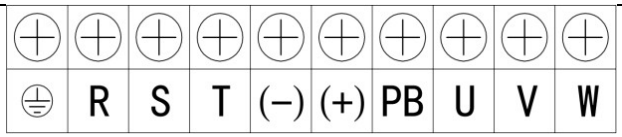
Terminal Symbol	Terminal description
⏚	Grounding terminal PE
R, S, T	Three-phase AC input terminals
(-), (+)	DC bus - + terminals for common bus DC input
(+), PB	Terminals reserved for braking resistor
U, V, W	Three-phase AC output terminals

4.4.4 3.4.4NE300-4T0300G/0370P~4T1100G/1320P /NE300-2T0015G~2T0450GB

Terminal diagram of main circuit	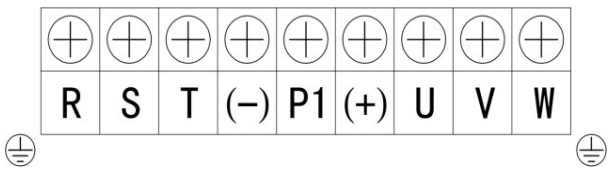
Terminal Symbol	Terminal description
⏚	Grounding terminal PE
R, S, T	Three-phase AC input terminals
(-), (+)	DC bus - + terminals for common bus DC input
P1, (+)	Reserved for DC reactor connecting terminal. Short circuited with copper plate as factory setting
U, V, W	Three-phase AC output terminals

4.4.5 NE300-4T1320G/1600P(-U/-D)~4T2500G/2800P(-U/-D)

Terminal diagram of main circuit	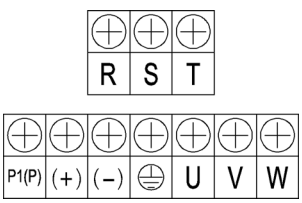
Terminal Symbol	Terminal description
⏚	Grounding terminal PE
R, S, T	Three-phase AC input terminals
(-), (+)	DC bus - + terminals for common bus DC input
P1(P), (+)	Reserved for DC reactor connecting terminal; Short circuited with copper plate as factory setting
U, V, W	Three-phase AC output terminals

4.4.6 NE300-4T1600G/1850P-F~4T3150G/3550P-F

Terminal diagram of main circuit	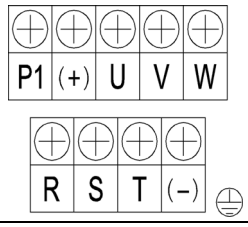
Terminal Symbol	Terminal description
⏚	Grounding terminal PE
R, S, T	Three-phase AC input terminals
(-), (+)	DC bus - + terminals for common bus DC input
P1, (+)	Reserved for DC reactor connecting terminal; Short circuited with copper plate as factory setting
U, V, W	Three-phase AC output terminals

4.4.7 NE300-4T3550G/400P-F~4T5000G/5600P-F

Terminal diagram of main circuit	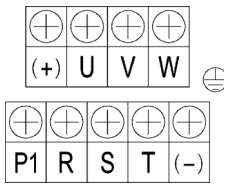
Terminal Symbol	Terminal description
⏚	Grounding terminal PE
R, S, T	Three-phase AC input terminals
(-), (+)	DC bus - + terminals for common bus DC input
P1, (+)	Reserved for DC reactor connecting terminal; Short circuited with copper plate as factory setting
U, V, W	Three-phase AC output terminals

4.4.8 NE300-4T5600G/6300P-F~4T8000G/9000P-F

Terminal diagram of main circuit	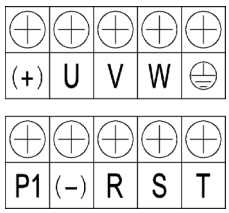
Terminal Symbol	Terminal description
⏚	Grounding terminal PE
R, S, T	Three-phase AC input terminals
(-), (+)	DC bus - + terminals for common bus DC input
P1, (+)	Reserved for DC reactor connecting terminal; Short circuited with copper plate as factory setting
U, V, W	Three-phase AC output terminals

4.5 Control terminal wiring

4.5.1 Control Terminal Wiring of NE200

Figure 4-9 Control Terminal Wiring of NE200 (Example: 0022GB~0040GB)

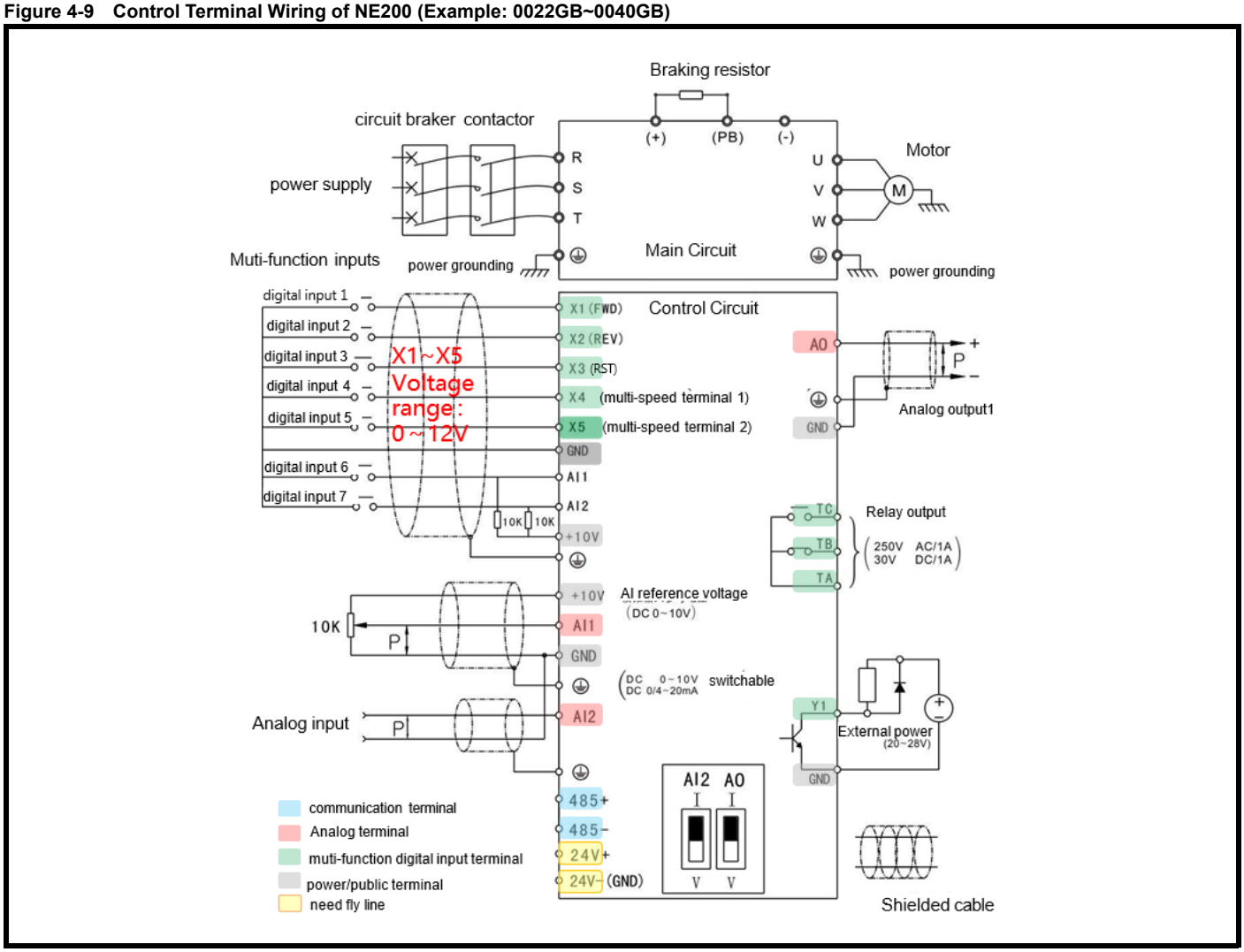

Figure 4-10 Control Terminal Wiring of NE300 (Example: NE300-4T0220G/0300PB and below)

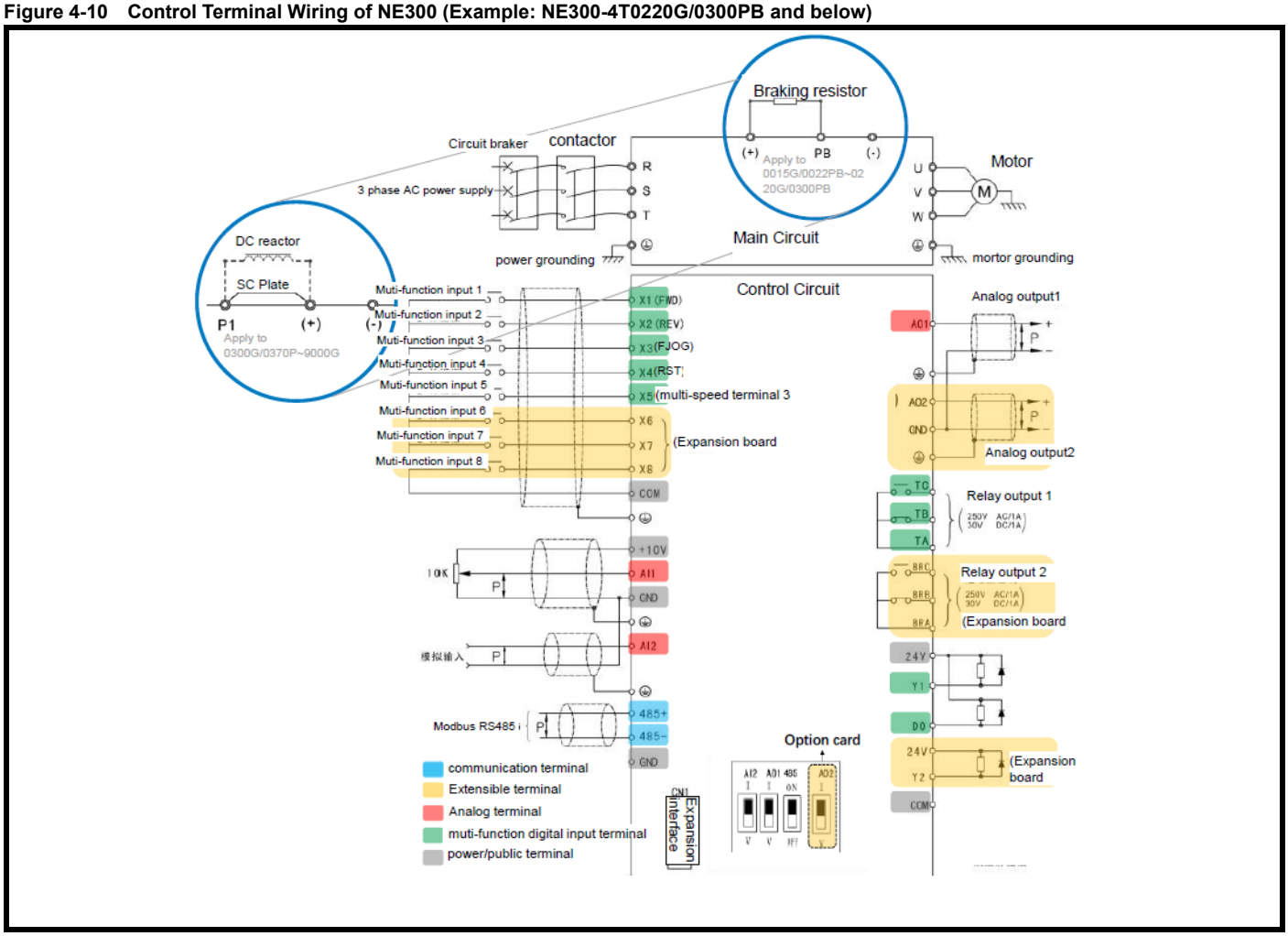

4.6 Functions of control circuit terminals

4.6.1 NE200 Standard configuration of control circuit terminals

Type	Terminal	Terminal function	Technical specification
Digital input & output	X1～ X5	Multi-functional input terminals 1～5	Optical-isolated input Frequency range:：0～200 Hz Voltage range: 0～12 V
	Y1	Open collector output	Optical-isolated output maximum output current: 50 mA Output voltage range：0～24 V
	GND	Terminal ref. grounding	
	24 V	24 V	24 V ±5 %, Maximum load :200 mA, with overload and short circuit protection
Analog input	10 V	Analog input reference voltage	Open circuit voltage up to 11V ; Maximum output 30 mA
	AI1	Analog input channel 1	Input Voltage range：0～10 V Input impedance：100 kΩ
	AI2	Analog input channel 2	Input Voltage range：0～10V Input impedance：100 kΩ Input current range：0～30 mA Current Input impedance: 500 Ω, 0~20 mA or 0~10 V analog input can be selected through DIP switch SW1
	GND	Terminal ref. grounding	
Analog output	AO	Analog output 1	0～20 mA: Allowed load impedance 200~500 Ω 0～10 V: Allowed load impedance ≥1 kΩ. With SC protection; 0~20 mA or 0~10 V analog output can be selected through DIP switch SW2
	GND	Analog grounding	
Relay output	TA/TB/TC	Relay output 1	TA-TB: NC; TA-TC: NO Contact capacity: 250 Vac/1A, 30 Vdc/1A
RS485	485+	485 differentials positive	Rate: 1200/2400/4800/9600/19200/38400 bps. Max. parallel 127 No.s; SW3 select adapted resistor; Max. Length 500 m. (twisted shielding cable)
	485-	485 differential negatives	
	GND	485 shielding grounding	Internal isolated with COM

Figure 4-11 Arrangement of control circuit terminals

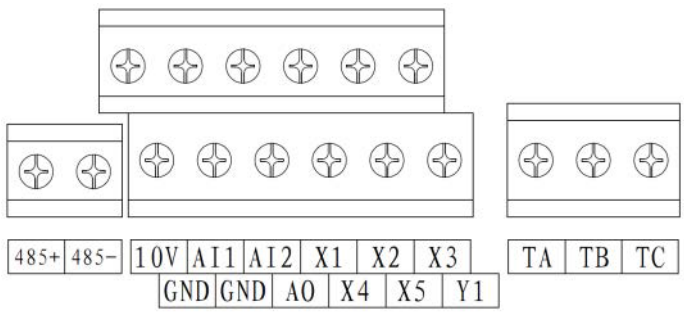

NE200-2S0004GB~ NE200-4T0022GB-M

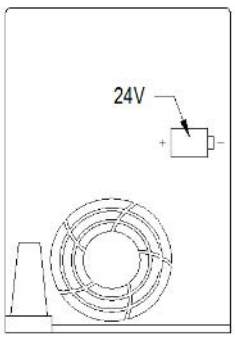

NE200-2S0022GB~ NE200-4T0040G/0055PB

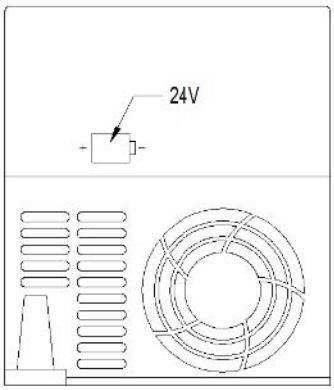

4.6.2 NE200 Control Circuit Connection

External controller contacts wiring diagram is as below. (for X1-X5 multifunction input)

Figure 4-12 NE200 control circuit wiring diagram

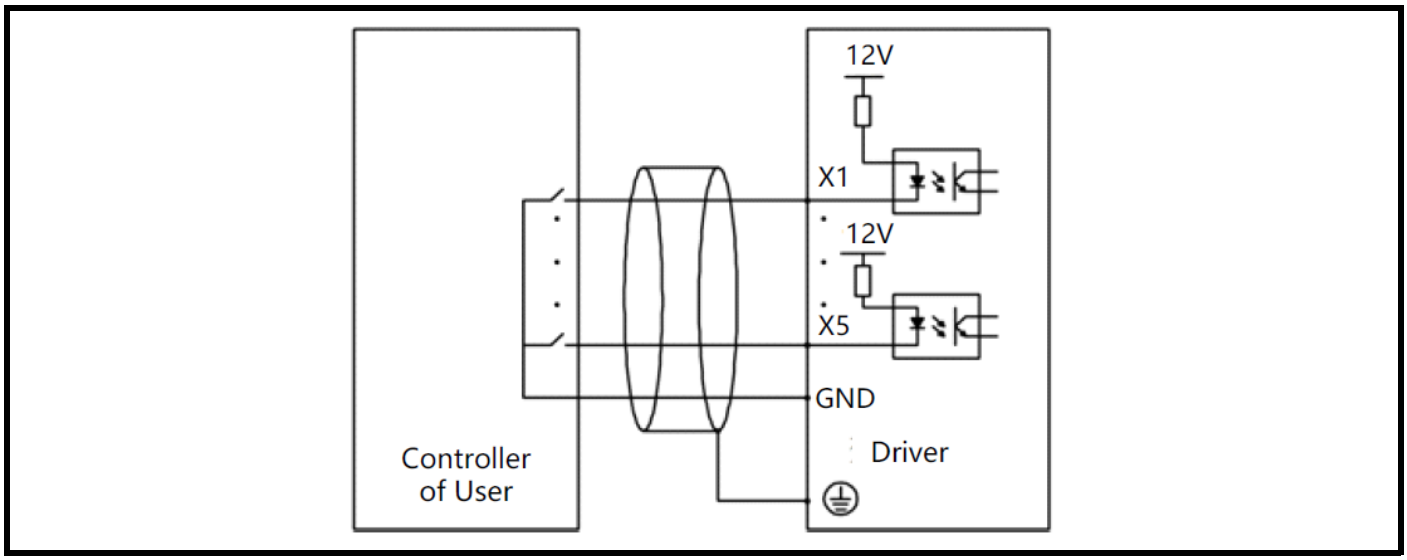

External controller NPN with common emitter wiring diagram as as below. (for X1-X5 multifunction input)

Figure 4-13 NE200 NPN common emitter wiring mode

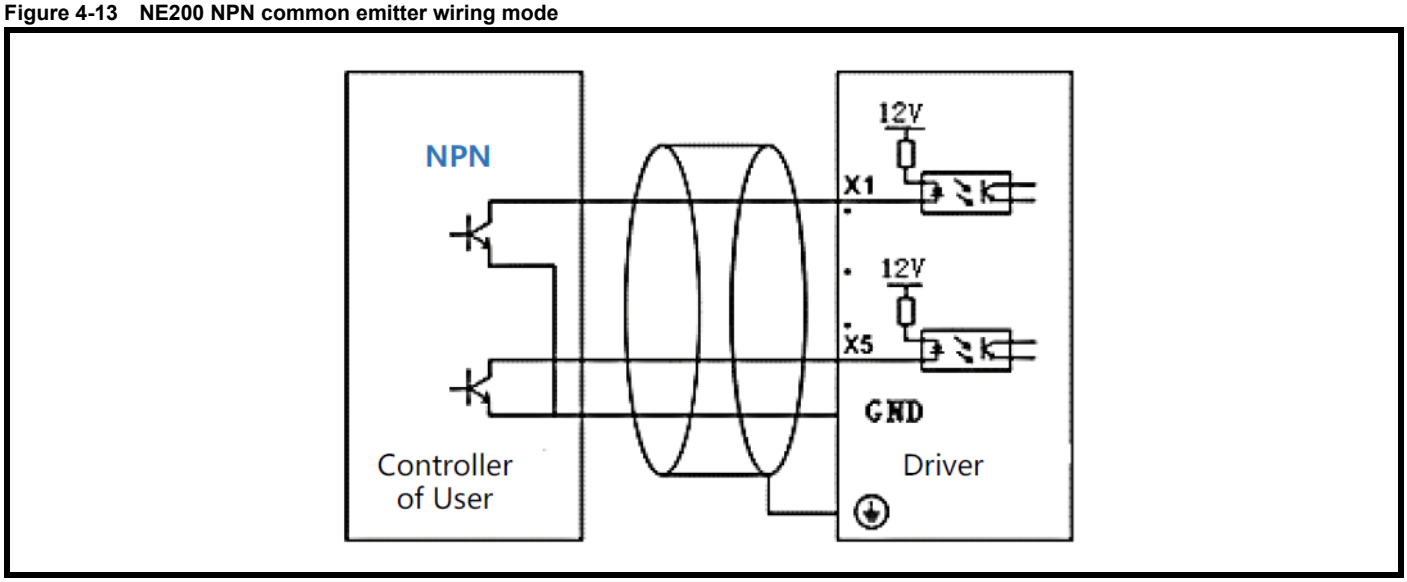

Y1 multi-functional output terminal adopt external power supply wiring mode.

Figure 4-14 NE200 Y1 wiring diagram for digital output controlling a relay with an external power supply

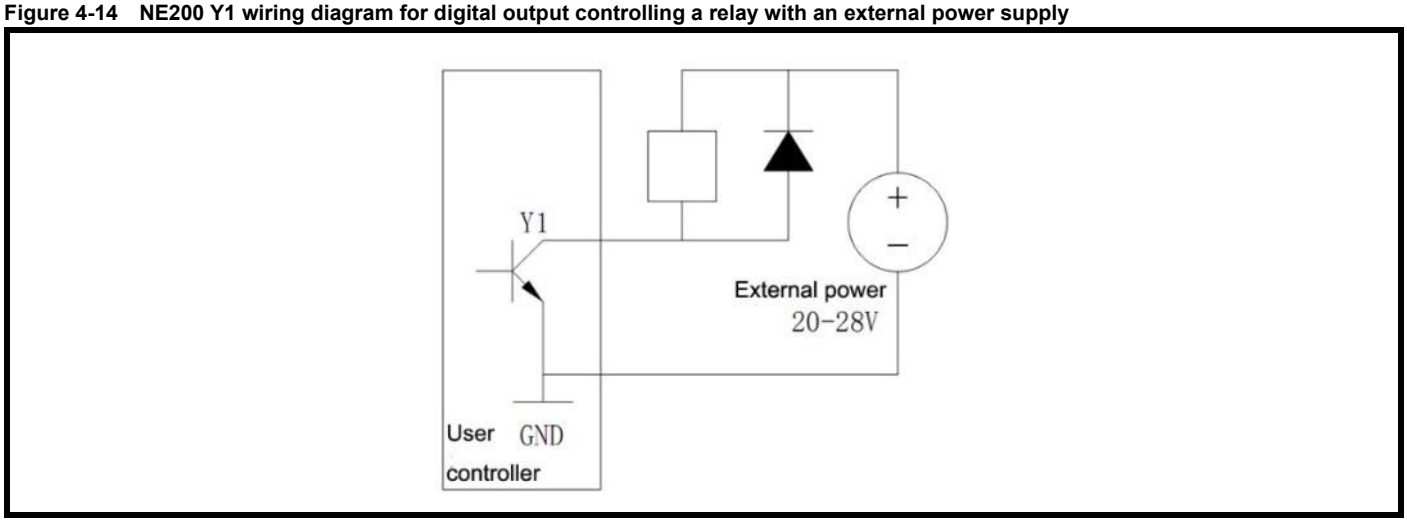

Figure 4-15 NE200 wiring diagram for analog input

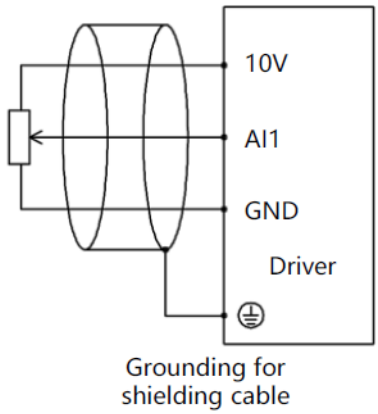

4.6.3 NE keypad wiring

Figure 4-16 T-568B standard

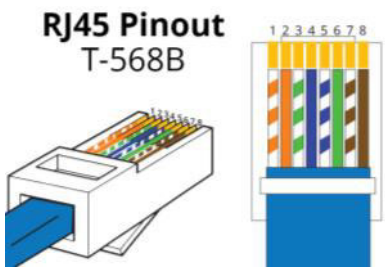

Pin No.	Color
1	Orange/White
2	Orange
3	Green/White
4	Blue
5	Blue/White
6	Green
7	Brown/White
8	Brown

The cables connecting keypad and control board use standard RJ-45 Interface, namely both sides are connected according to EIA/TIA568B standard. Users can make the cable themselves or purchase general internet cable to connect to the keypad.

4.6.4 NE300 Standard configuration of control circuit terminals

Type	Terminal	Terminal function	Technical specification
Digital input	X1~X3	Multi-functional input terminal 1~3	Optical-isolated input Frequency range: 0~200 Hz Voltage range: 0~24 V
	X4 X5	Multi-functional input or Single pulse input 4, 5	Multi-functional input: Same as X1 ～ X3 Single Pulse input:：0.1 Hz ～ 50 kHz Voltage range：0～24 V
	COM	Multi-functional input terminals common end	Internal isolated with GND
Digital output	24 V	24 V	24 V ±5 %, Maximum load : 200 mA, with overload and short circuit protection
	Y1	Open collector output 1	Optical-isolated output maximum output current: 50 mA Output voltage range：0～24 V
	DO	Open collector or high speed pulse output	Output frequency: 0～50 kHz Can be used as the normal open collector.
	COM	Open collector output common end	Internal isolated with GND
Analog input	10 V	Analog input reference voltage	Open circuit voltage up to 11 V; Internal isolated with com; Maximum load 30 mA, with overload and short circuit protection
	AI1	Analog input channel 1	Input Voltage range：0～10 V Input impedance：100 kΩ
	AI2	Analog input channel 2	Input Voltage range：0 ～ 10 V Input impedance：100 kΩ Input current range：0 ～ 30 mA Current Input impedance：500 Ω, 0~20 mA or 0~10 V analog input can be selected through DIP switch SW2
	GND	Analog grounding	Internal isolated with COM

Type	Terminal	Terminal function	Technical specification
Analog output	AO1	Analog output 1	0/4 ～ 20 mA: Allow output impedance 200~500 Ω 0 ～ 10 V: Allowed output impedance ≥10 kΩ. With SC protection, 0~20 mA or 0~10 V analog output can be selected through DIP switch SW1
	GND	Analog grounding	Internal isolated with COM
Relay output	TA/TB/TC	Relay output 1	TA — TB：NC; TA — TC：NO Contact capacity：250 Vac/1A，30 Vdc/1A
RS485	485+	485 differentials positive	Rate: 1200/2400/4800/9600/19200/38400 bps. Max. parallel 127 No.s; SW3 select adapted resistor; Max. Length 500 m. (twisted shielding cable)
	485-	485 differential negatives	
	GND	485 shielding grounding	Internal isolated with COM

Figure 4-17 Control circuit terminals diagram

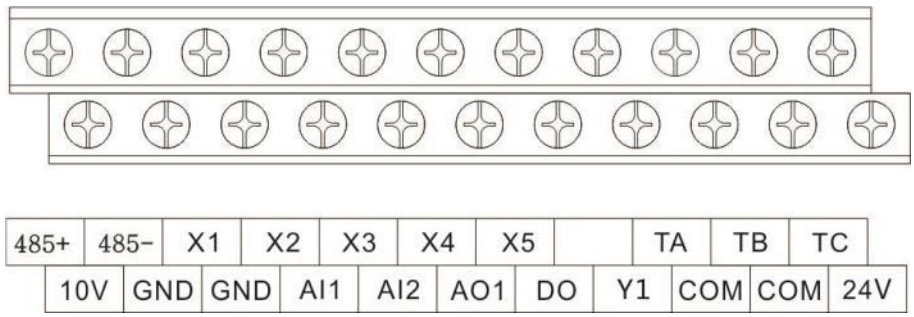

4.6.5 NE300 Control Circuit Connection

External controller contacts wiring mode is as below. (X1-X5 multifunction input)

Figure 4-18 NE300 dry contacts wiring diagram for external controller

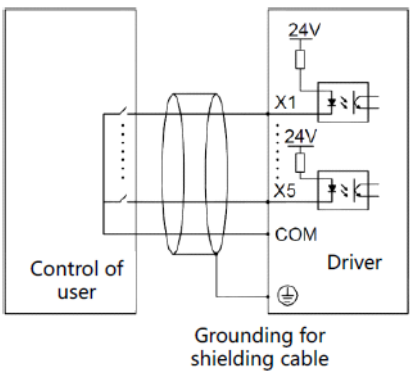

External controller NPN with common emitter wiring mode is as below. (X1-X5 multifunction input)

Figure 4-19 NE300 NPN common emitter wiring diagram

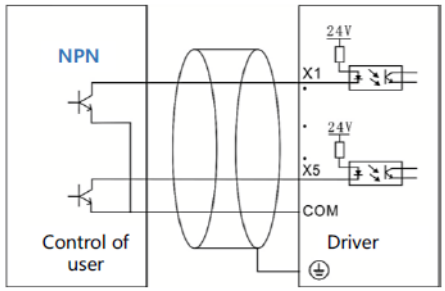

1. For NE300-I/O Lite option X6-X8 and NE300 closed-loop non-standard board X1-X5, the type of power supply input (PNP mode/NPN mode and internal/external power supply) can be selected by setting short wiring at terminal PLC-P24 or terminal PLC-COM. The wiring diagram is shown in Figure 4-29 to Figure 4-32 in Chapter 10.

NOTE

Please do not short connect terminal P24 and terminal COM. Otherwise, the drive will be damaged

2. Internal power supply NPN mode: short connect terminal PLC-P24 Please do not short connect terminal PLC-COM. Otherwise, the drive will be damaged.
3. Internal power supply PNP mode: short connect terminal PLC-COM. Please do not short connect terminal PLC-P24. Otherwise, the drive will be damaged.
4. External power supply: remove off the shorting wire at terminal PLC-COM and terminal PLC-P24

Y1/Y2, DO: The multi-functional output terminals adopt drive internal +24 V power supply wiring mode.

Figure 4-20 NE300 wiring mode of internal +24 V power supply

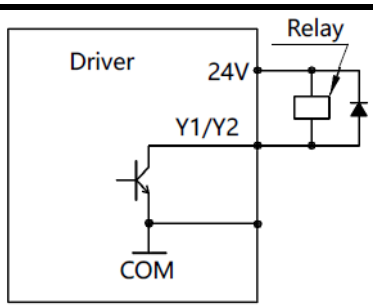

Y1/Y2, DO: The multi-functional output terminals adopts external power supply wiring mode

Figure 4-21 External power supply wiring mode

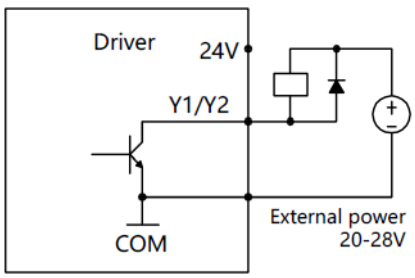

Analog input wiring mode

Figure 4-22 Wiring mode of analog input terminal

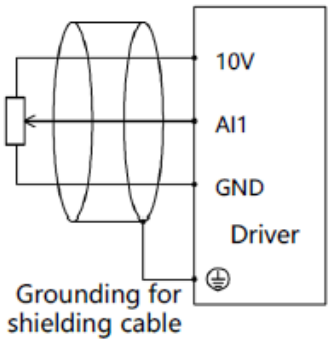

4.7 Control board schematic drawing

4.7.1 NE200 Control board schematic drawing

Figure 4-23 NE200 Control board schematic drawing

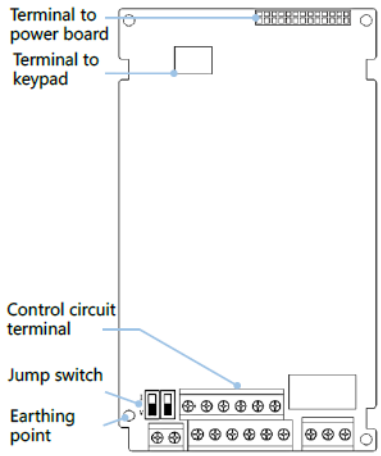

4.7.2 NE200 DIP switch setting instruction

Figure 4-24 NE200 DIP switch setting

DIP switch	Function	Default
AI2	I: 0~20 mA input; V: 0～10 V input	0 ~ 10 V
AO1	I: 0~20 mA output; V: 0～10 V output	0 ~ 10 V

4.7.3 PNP version (NE200-HW-24)

(Fitted as standard on the European drives)

Figure 4-25 Arrangement of control circuit terminals (NE200-HW-24)

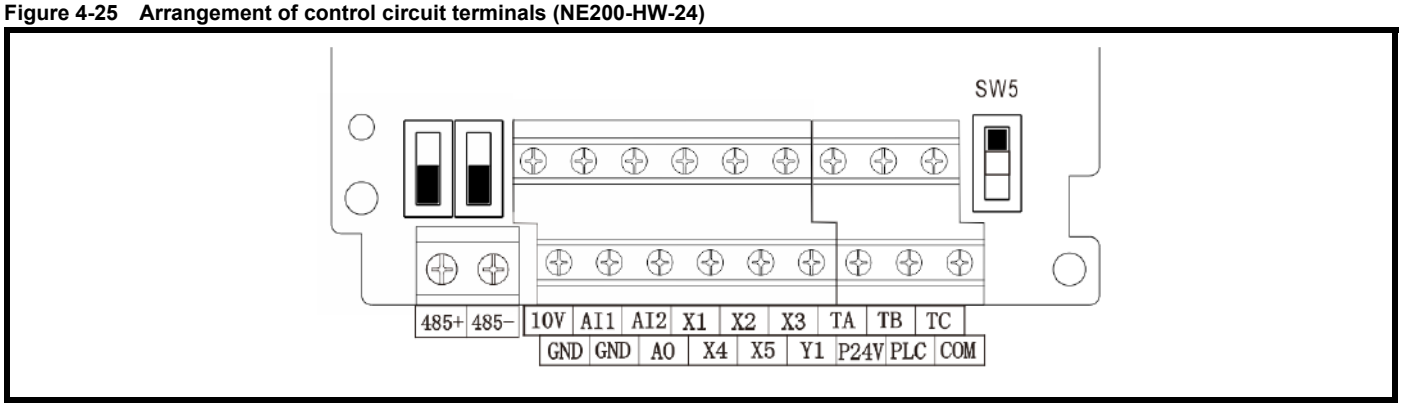

SW5 allows you to choose which type of connection you want to use: PNP or NPN.

You can use internal or external power source.

Pos.1: P24 and PLC terminals are connected (NPN with internal power source)

Pos.2: All terminals are disconnected (NPN\PNP with external power source)

Pos.3:COM and PLC terminals are connected (PNP with internal power source)

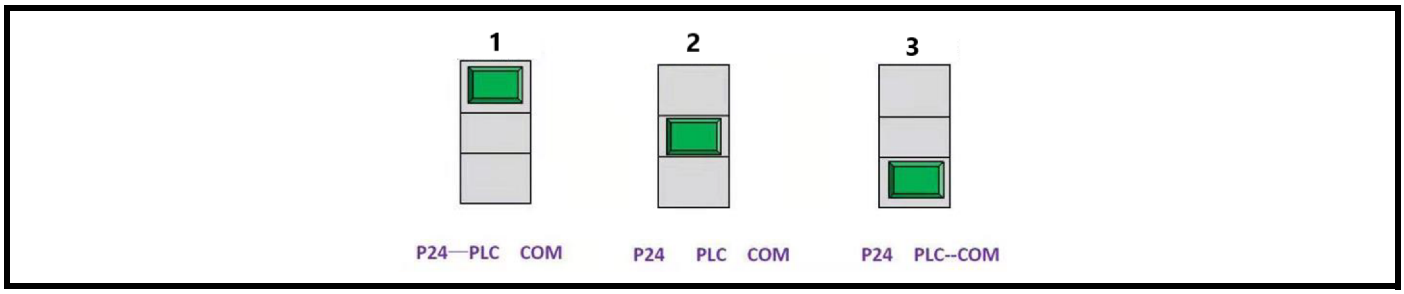

4.7.4 NE300 Control board schematic drawing

Figure 4-26 Control board schematic drawing

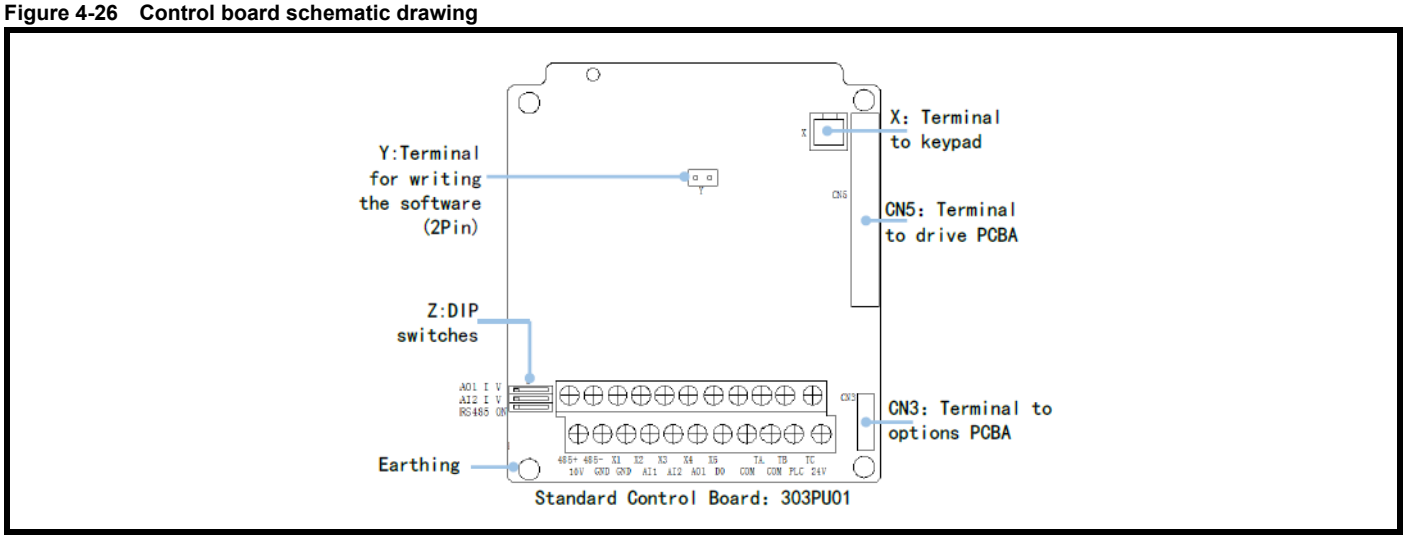

NOTE

X,Y and Z indicate the locations of the terminals for the keypad, software re-programming and DIP switches respectively on the 303PU01.

X: Terminal for keypad

Y: Terminal for writing the software. (2 Pin terminal)

Z: DIP switches

CN3: Terminals 1 for options PCBA

CN5: Terminal for drive PCBA

Earthing: Earthing point of control PCBA

4.7.4.1 NE300 Control circuit periphery accessories selection

Terminal Codes	Terminal Screw	Tightening torque	Cable size (mm^2)	Type of wire
10V, AI1, AI2, AO1, GND 485+, 485-	M3	0.5 Nm ~ 0.6 Nm (4.43 lb in ~ 5.31 lb in)	0.75	Twisted pair shielded cable
24V, X1, X2, X3, X4, X5, COM, Y1, DO, COM, TA, TB, TC				Shielded cable

4.7.4.2 NE300 DIP switch setting instruction

Figure 4-27 NE300 DIP switch setting

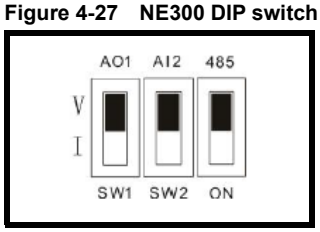

DIP switch	Function	Default
AI2	I for current input (0/4~20 mA); V for voltage input (0～10 V)	0~10 V
AO1	I for current output (0/4~20 mA); V for voltage output (0～10 V)	0~10 V
RS485	User selected resistor	ON

4.8 NE300 advanced control PCBA diagram

303PU01 is the standard control PCBA (See Figure 4-26). Need to use 303PU02 if you want to get the close-loop, CAN etc. functions. (See Figure 4-28). The 303PU02 control board is fitted as standard to the European versions of the NE300.

Figure 4-28 NE300 close-loop control PCBA diagram

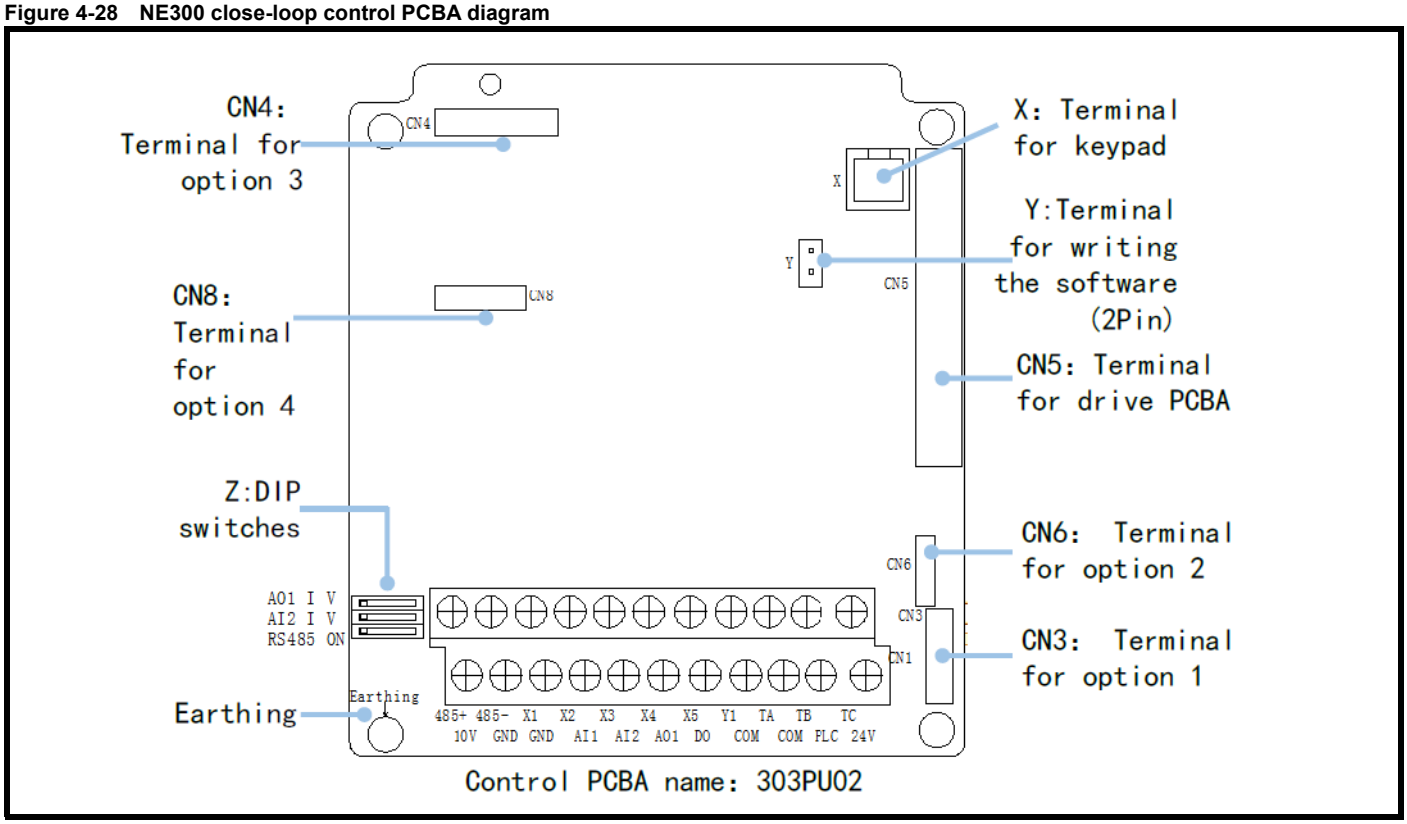

NOTE

X, Y and Z in Figure 4-28 shows the location of the terminal but are not printed on the pcb.

X: Terminal for keypad

Y: Terminal for writing the software (2 pins)

Z: DIP switches

CN3: Terminal for option 1

CN4: Terminal for option 3

CN5: Terminal for drive PCBA

CN6: Terminal for option 2

CN8: Terminal for option 4

Earthing: Earthing point

4.9 Wiring of control circuit

4.9.1 Terminal sequence of control circuit

485+	485-	X1	X2	X3	X4	X5	Y1	TA	TB	TC

10V	GND	GND	AI1	AI2	AO1	DO	COM	COM	PLC	24V

X1~X5 PNP/NPN wiring diagram (NE200-HW24/NE300 with PCBA 303PU02)

Figure 4-29 PNP wiring diagram (Using external power)

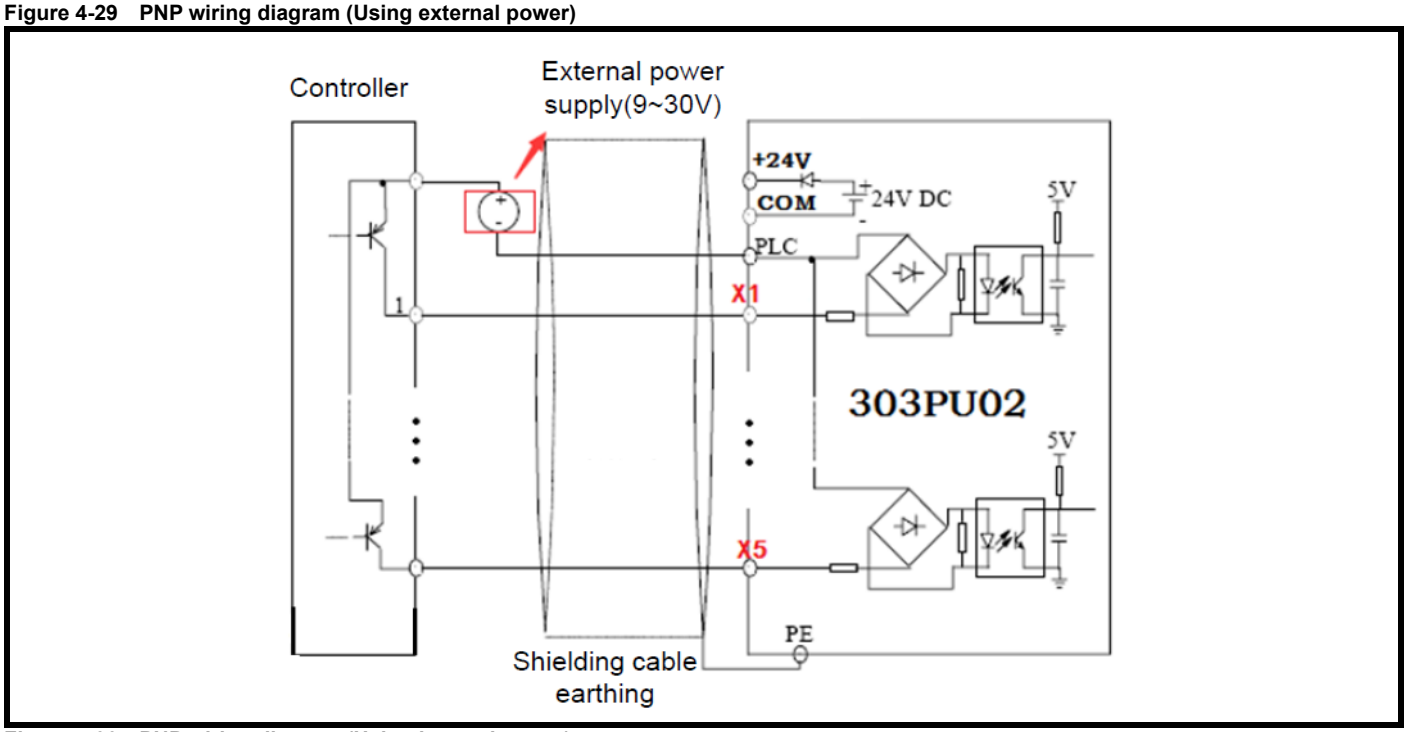

Figure 4-30 PNP wiring diagram (Using internal power)

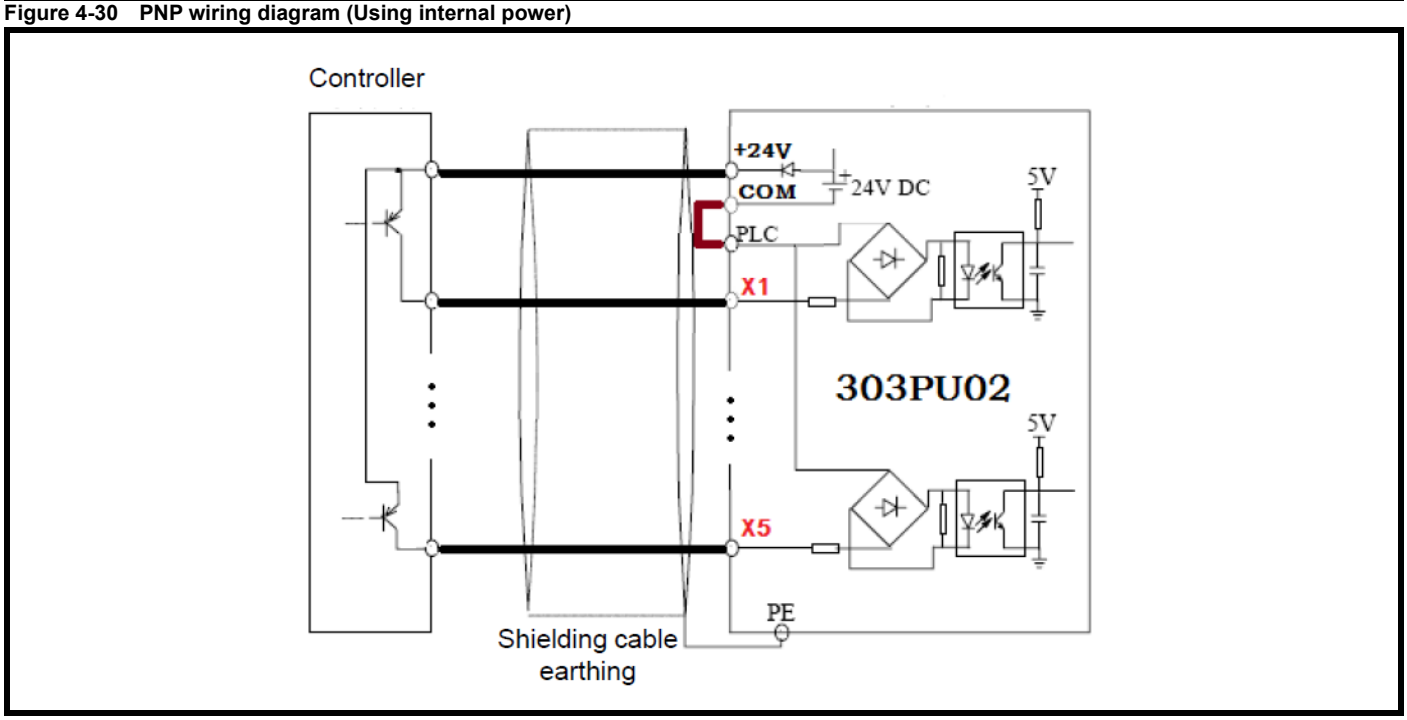

Figure 4-31 NPN wiring diagram (using internal power)

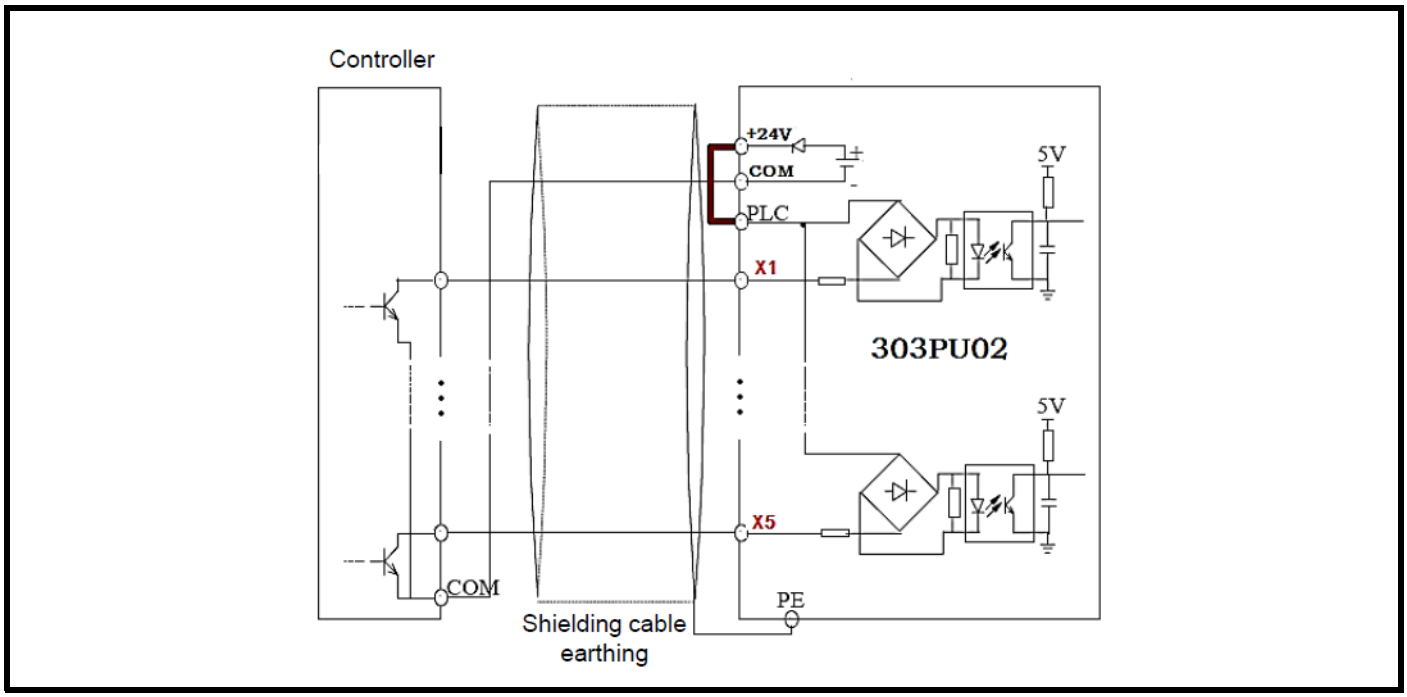

Figure 4-32 NPN wiring diagram (Using external power)

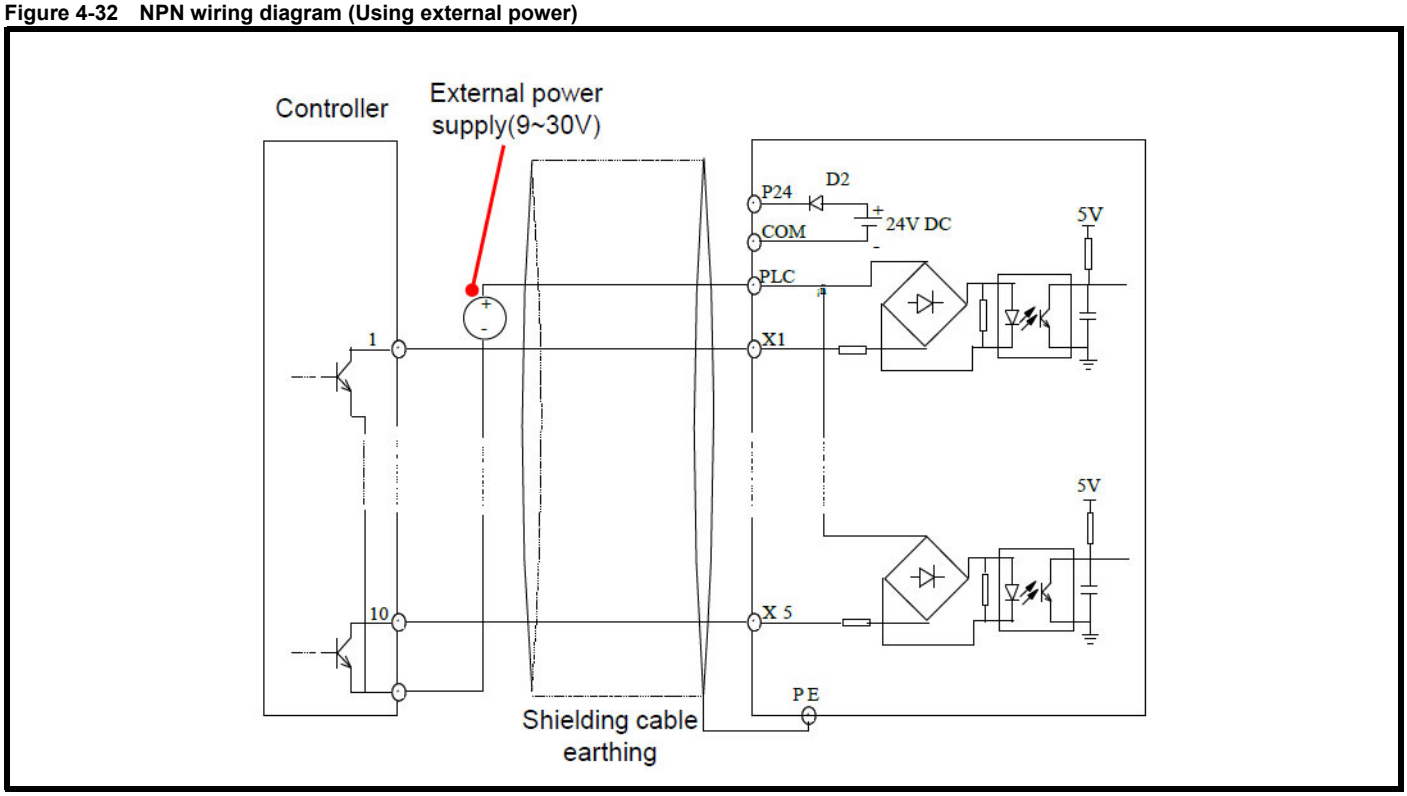

4.9.2 CAN non-standard protocol instruction

CAN ID1 transmitting and receiving data format is constant as Table D-1. Adjust to decrease interval time, suggest within 1.5ms, of host transmitting, to increase interval time of slaver device.

Table 4-3 D-1 CAN ID1 Transmitting and Receiving Format

Byte0	Bit0: Running signal Bit1: Direction signal Bit2: Fault signal Bit3~Bit7: Reserved	1: Running 0: Stopped 1: REV 0: FWD 1: Fault 0: Normal
Byte1 **Byte2**	Freq. Signal: Max. Freq.:	Range: ~20000~20000 20000/Min. Minus Freq.: -20000
	NOTE Byte1 high 8 byte, Byte2 low 8 byte	
Byte3 **Byte4**	Freq. Signal: Max. Freq.:	Range: ~20000~20000 20000/Min. Minus Freq.: -20000:
	NOTE Byte3 high 8 byte, Byte4 low 8 byte	
Byte5 **Byte6**	Given signal of current-loop (Iq): 4096:	-8192~8192 Rated torque current related motor (From speed-loop output signal)
	NOTE Byte5 high 8 byte, Byte6 low 8 byte	
Byte7	Reserved	

CAN ID2 transmitting data format as following Table D-2, this function is to transmit the status info. of self.

Table D-2 CAN ID2 Transmitting data format

Byte0 **Byte1**	Data 1 (Byte0 High 8 bytes, Byte1 low 8 bytes
Byte2 **Byte3**	Data 2 (Byte2 High 8 bytes, Byte3 low 8 bytes
Byte4 **Byte5**	Data 3 (Byte4 High 8 bytes, Byte5 low 8 bytes
Byte6 **Byte7**	Data 4 (Byte6 High 8 bytes, Byte7 low 8 bytes

5 Operation and application

5.1 Keypad

The keypad of NE200/300 series drives is the main unit of accepting command, displaying and modifying parameters. This series has 2 types of LED/LCD (Optional) keypads. LED keypad is with potentiometer and the LCD is MFK key without potentiometer. The LED keypad outline is as follows.

LED keypad model name: NEF-LED01

LCD keypad model name (option): NEF-LCD01

Figure 5-1 Keypad diagram

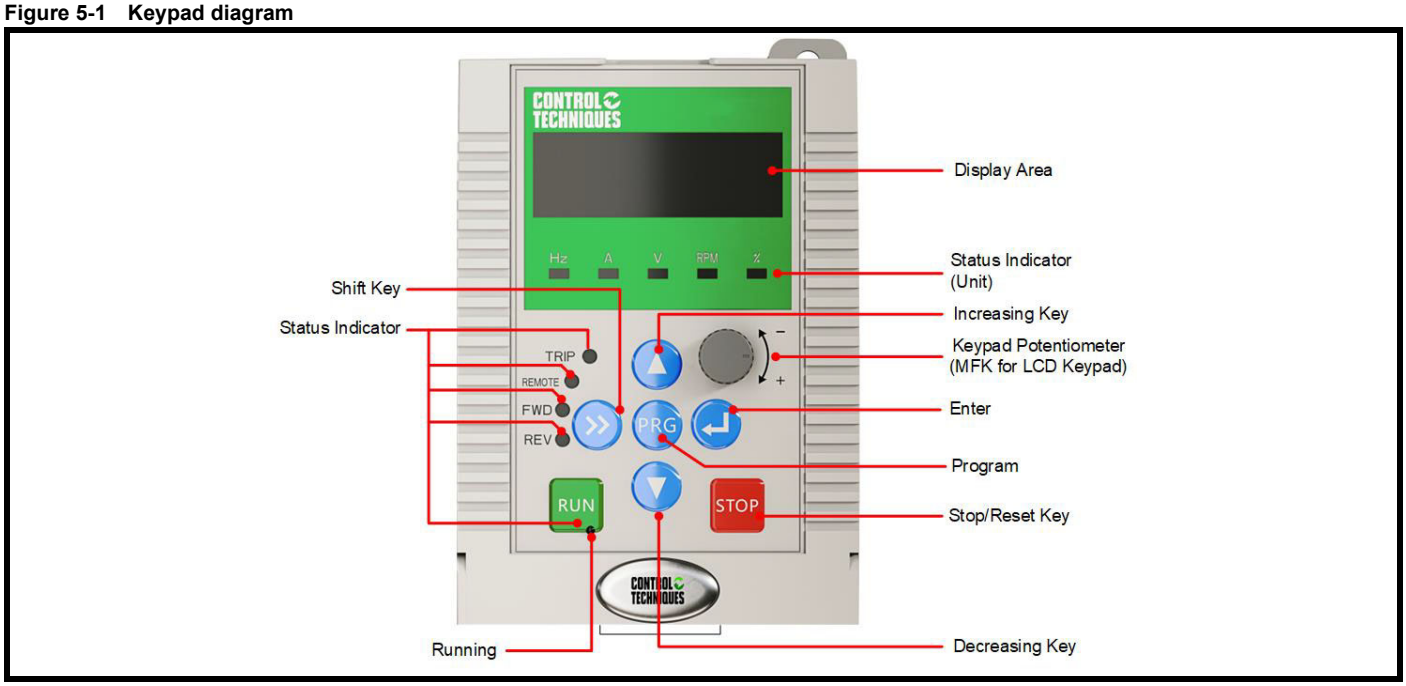

5.1.1 Keypad button description

Table 5-1 Button description

Keys	Name	Function
PRG	Programming key	Entry and exit of primary menu.
ENTER	Confirmation key	Enter the next level menu or confirm the data setting.
Λ	Increase key	Increase of the value or function code.
V	Decrease key	Decrease of the value or function code.
>>	Shift key	Select the to be displayed parameters in turn under stop interface or running interface; Choose the to be modified digits when setting parameters.
RUN	Running key	Run the drive under keypad operation mode.
STOP	Stop/reset	Stop the drive at running status; Reset operation in the fault alarm status. Its function is limited to setting of code FE.02.
Knob	Potentiometer	Adjust setting value when potentiometer is set up as input. (For LED keypad)
MFK	Multi-Function key	MFK's function is set by FE.01 (0~7). The function is different while FE.01 is equal to the different value. (For LCD keypad).

5.1.2 Keypad indicators

Table 5-2 Description of indicators

Symbol of Indicator		Meanings
Running Status	RUN	Light On: Running Light Off: Stopped Light Blinking: Running at zero frequency
	FWD	Light On: Running forward steadily Light Off: Running reverse or stop Light Blinking: Speed up or speed down forward
	REV	Light On: Running reverse steadily Light Off: Running forward or stop Light Blinking: Speed up or speed down reverse
	TRIP	Light On: Trip (Fault) Light Off: Normal
	REMOT	Light On: Be controlled by the terminals Light Off: Be controlled by the keypad Light Blinking: Be controlled by communication
Unit	Hz	Light On: Current frequency is running frequency Light Blinking: Current frequency is set frequency
	A	Current unit indicator
	V	Voltage unit indicator
	RPM	Light On: Current speed is running speed Light Blinking: Current speed is set speed
	%	Light On: Current value is running data Light Blinking: Current value is set data
	Hz+A	Light On: Current value is PID running value Light Blinking: Current value is the setup PID value

5.1.3 Digital display zone

The four digit display can be used to display set-up frequency, output frequency and various monitoring data and alarm codes.

5.2 Function code viewing and modification

The keypad of the NE200/300 drive adopts three levels menu structure to carry out operations such as parameter setting. The three levels are:

Groups of function code (level-1 menu)

Function code (level-2 menu)

Function code setup value (level-3 menu)

NOTE

At level 3 menu, pressing PRG key or ENTER key can return to level-2 menu. The difference between them is that: Pressing ENTER will save the setup and return to the level 2 menu and then automatically shift to the next function code; while pressing PRG key will directly return to level 2 menu without saving the parameter, and stay at current function code.

Below is the example of modifying the function code F9.01 from 10.00 Hz to 20.00 Hz. (The number of bigger font size refers to the blinking digit).

Figure 5-2 Example of 3 levels menu operating

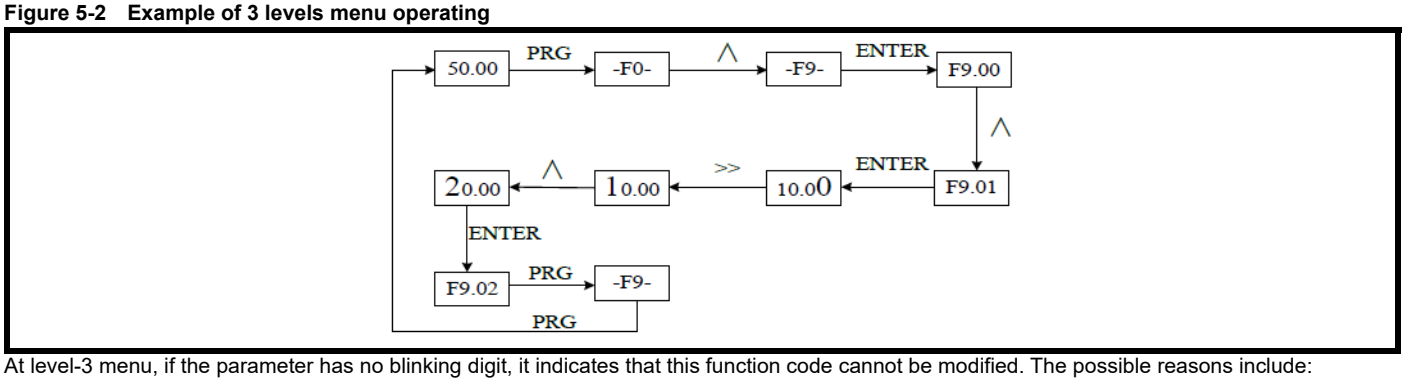

At level-3 menu, if the parameter has no blinking digit, it indicates that this function code cannot be modified. The possible reasons include:

1. The function code is an unchangeable parameter, such as actual detection parameter, running record parameter, etc.
2. The function code cannot be modified in running status. It can be modified only after the drive running is stopped.

5.3 Display status of keypad

Displaying status include the stopped state parameter display, the running status parameter display, the function code edition display and the fault warning condition display etc.

1. The stop status parameter display

The drive is at stop state. The LED displays the stop state parameters. You can press ">>" to display different parameters at stop state. (User can set which parameters are to be displayed at stop state in FE group function codes.)

2. The running state parameter display

The drive is running and the LED displays the running state parameters. You can press ">>" to display the different running state parameters. (User can set which parameters are to be displayed at running state in FE group function codes.)

3. Fault and warning state

If the drive has detected a warning signal, it comes into warning state and blinks the warning code. If the warning signal disappears, the warning code will automatically disappear.

If the drive has detected an error, the fault code will be displayed and the indicator TRIP light will be on. By pressing the ">>"key, user can view the parameters value of stop state. If you want to see the details of fault information, press the "PRG" key to enter programming state and check parameter group FF.

User can reset the drive by STOP key, terminal or communication. If the fault signal still exists, the keypad keeps displaying the fault code.

4. Function code setting state

In any stop, running or warning/tripped state the PRG key can be used to enter parameter settings. The detailed setting method is instructed in this manual section 5.2.

5.4 Password Setting

The drive provides user password setting function. When FP.00 is set to non-zero value, which is the user password, the password protection turns valid after exiting the editing status. When the user goes to FP group again and presses ENTER, it shows "0000". Correct password should be input to unlock the protection status to enter FP group again. To disable this password protection, user need to input the correct password first and then change FP.00=0.

5.5 Typical application

5.5.1 Open loop synchronizer debugging

1. To set the motor rated frequency (F0.10), motor type (F5.00=2), motor rated power (F5.02), Polarity number (F5.01, it can be unset, but the rotate speed will not be accurate), rated current (F5.03) according to the motor nameplate.
2. To set the max/upper limit frequency (F0.11/F0.12) according to working conditions.
3. To set the drive as open-loop vector control. (F0.01=1).
4. Tuning motor: Set F5.10=2 as rotary tuning, when the drive displays "-At- "on screen, press "RUN" button to start tuning.

The drive will automatically save synchronous motor parameters F5.11~F5.14.

When the motor is on rotary tuning, it must be noted that the acceleration and deceleration time are F0.19 and F0.20, which cannot be set too small.

If rotary tuning is not allowed on site, static tuning (F5.10=1) should be conducted, the synchronous motor counter EMF shall be set manually (F5.14).

NOTE

There are two commonly used methods to represent the synchronous motor counter EMF.

a) Volt per thousand rotation

b) Rated frequency corresponds to the amount of voltage

NE series drives use the second representation.

NOTE

When the motor is on rotary tuning or running, the motor occurs unstable vibration, skip flow fault, current limiting fault. If the motor is unstable when running or during a rotating auto-tune or if there is either a skip flow or current limiting fault then the current loop parameters may need to be reduced.

5.5.2 Closed loop debugging

Incremental encoder parameters(F3.46=1)

1. To set some motor related parameters, like the motor type, rated power, rated current, motor polarity, rated rotation speed and so on according to motor nameplate.
2. To set encoder pulse number (F3.14), PG direction (F3.16), F3.54, F3.55, F3.56.
3. To set the control mode as closed-loop control mode (F0.01=2)
4. If the encoder generates a Z signal, users do not have to set the encoder pulse and encoder direction related parameters, these parameters can be obtained from rotary tuning.

Resolver encoder(F3.46=3)

1. To set some motor related parameters, like motor type, rated current, motor polarity, rated rotation speed and so on according to motor nameplate.
2. To set the related parameters of resolver encoder. F3.47~F3.50.
3. To set the control mode (F0.01=2) as closed-loop control mode
4. Complete a rotary auto-tune.

NOTE

a) The internal drive rated slip is calculated from the synchronous speed of the motor (120*f/P)-rated rotation speed, so the set rated rotation speed should be lower than motor synchronous rotation speed.

b) When there is no Z signal in the encoder of asynchronous motor, the encoder pulse can be set and run to 50 Hz with an open loop to check the motor rotation speed and the running direction of encoder and motor. (F3.62=0 means same direction. F3.62=1 means that the direction between encoder and motor is reverse, you can set F3.16 or exchange the A/B wires to make it reverse.) As to the 24 V differential PG option, when the encoder is non-differential, it can short connect the PG option terminals 24V,A+,B+, and the encoder terminals, A/ B/ Power/ Ground, should be accordingly connected to PG option's terminals, A-/ B-/ 24 V/ COM (or short connect PG option's terminals, COM/ A-/ B-, and encoder terminals, A/ B/ Power/ Ground, short connect to PG card terminals A+, B+,24 V, COM, which is mainly determined by the type of encoder.

5.5.3 DC common bus

NE200/NE300 drives can share a common DC bus. Please contact your drive supplier if you want to share DC common bus. While sharing bus, the master drive is AC-in and AC-out, connect the DC bus of the follower drive to the DC bus of the master.

WARNING

Usually, the power of the follower drive can't be more than the 15 % of the power of the master drive because the rectifier and capacitors capacity limitation of the master drive.

6 Parameters

'② ' indicates this parameter is only for NE200

'③ ' indicates this parameter is only for NE300

6.1 Group 0 Basic Function

Code	Description	Setting range	Default	Modify	Modbus Address
F0.00	② Reserved	Reserved	Reserved	-	0100H
	③ Drive type display	0: Type G (Heavy duty) 1: Type P (Normal duty)	0: Type G (Heavy duty)	x	0100H
F0.01	Control mode	0: Sensorless Vector control-1 1: Sensorless vector control-2 ② 2: Reserved ③ 2: Vector control with encoder 3: V/F control	0: Sensorless Vector control-1	x	0101H
F0.02	Run command control mode	0: Keypad control 1: Terminal control 2: Communication control	0: Keypad control	o	0102H
F0.03	Frequency reference1 (Freq. ref. 1)	0: Digital reference (Keypad, terminal up/down) 1: AI1 2: AI2 3: PULSE setup 4: Communication 5: MS (Multi-step) Speed 6: Programmable Logic Controller (PLC) 7: PID 8: Keypad potentiometer	0: Digital reference (Keypad, terminal up/down)	o	0103H
F0.04	Frequency reference2 (Freq. ref. 2)	1: AI1 2: AI2 3: PULSE setup 4: Communication 5: MS (Multi-step) Speed 6: Programmable Logic Controller (PLC) 7: PID 8: Keypad potentiometer	1: AI1	o	0104H
F0.05	Frequency setting selection	0: Freq. ref.1 1: Freq. ref.2 2: Freq. ref.1+ Freq. ref.2 3: Switch between Freq.ref.1 & Freq.ref.2 by terminal 4: Switch between (Freq.ref.1+ Freq.ref.2) & Freq.ref.1 by terminal 5: MIN (Freq.ref.1, Freq. ref.2) 6: MAX (Freq.ref.1, Freq. ref.2)	0: Freq. ref.1	o	0105H
F0.06	UP/DOWN Preset freq.	0~ Max frequency	50.00 Hz	o	0106H
F0.07	Terminal UP/DOWN rate	0.01~50.00 Hz/s	1.00 Hz/s	o	0107H
F0.08	UP/DOWN function source select	0: Keypad and terminal 1: Keypad 2: Terminal	1: Keypad	o	0108H
F0.09	UP/DOWN data saving selection	0: Saved at power loss 1: Not saved at power loss 2: Setting cleared to 0 after stop	0: Saved at power loss	o	0109H
F0.10	Basic frequency	0.10~550.0 Hz	50.00 Hz	x	010AH
F0.11	Max frequency	MAX [50.00 Hz, Freq.upper limit, Reference frequency]~550.0 Hz	50.00 Hz	x	010BH
F0.12	Freq. upper limit	Freq. lower limit ~ Max frequency	50.00 Hz	x	010CH
F0.13	Freq. lower limit	0.00~Frequency upper limit	0.00 Hz	x	010DH
F0.14	Max outage voltage	110~440 V	Depends on model	x	010EH
F0.15	Switching freq.	1.0~16.0 kHz	Depends on model	o	010FH
F0.16	Switching freq. auto-adjust	0: Disable 1: Enable	0: Disable	o	0110H
F0.17	Keypad direction	0: Forward 1: Reverse	0: Forward	o	0111H

Code	Description	Setting range	Default	Modify	Modbus Address
F0.18	Motor wiring direction	0: Positive sequence 1: Reversed sequence	0: Positive sequence	x	0112H
F0.19	Acc. time1	0.1~3600 s	Depends on model	o	0113H
F0.20	Dec. time1	0.1~3600 s	Depends on model	o	0114H

Parameter	**F0.00** ② Reserved ③ Drive type display	Range	0~1	Default	0

This parameter of NE200 is reserved.

NE300 as below

Value	Text
0	Type G (Heavy duty)
1	Type P (Normal Duty)

Parameter	**F0.01** Control mode	Range	0~3	Default	0

Value	Text	Description
0	Sensorless vector control-1	This mode offers excellent vector control performance while insensitive to motor parameters. It is applicable to most applications.
1	Sensorless vector control-2	Precise speed sensorless vector control technology realizes AC motor decoupling, enabling the DC motorization of running control. It's applicable to high performance applications and features high precision of speed and torque and eliminates the need for pulse encoder.
2	② Reserved ③ Vector control with encoder	
3	V/F control	It is applicable to the common applications where load requirement is not high such as fan and pump loads. It can be also used in applications where one drive drives multiple motors.

Parameter	**F0.02** Run command control mode	Range	0~2	Default	0

Value	Text	Description
0	Keypad control	Operation keypad control ("LOCAL/REMOT" indicator OFF) Running commands are controlled by RUN and STOP keys on operation keypad.
1	Terminal control	Terminal control ("LOCAL/REMOT" indicator ON) Running commands are controlled by the multi-functional input terminals such as FWD, REV, JOGF, JOGR, etc.
2	Communication control	Serial communication control ("LOCAL/REMOT" indicator blinks) Start & stop is controlled by the communication serial port.

Parameter	**F0.03** Frequency reference 1 (Freq. ref. 1)	**Range**	0~8	**Default**	0
	F0.04 Frequency reference 2 (Freq. ref. 2)		1~8		1

Value	Text	Description
0	Digital reference (Keypad, terminal up/down)	Digital setup The initial value is the value of F0.06 “UP/DOWN preset frequency” The reference frequency value can be changed through the keys ▲ and ▼ on the keypad or multi-function terminals UP/DOWN (select through F0.08). The modification recording options in case of power failure is determined by the parameter F0.09. If setting is not saved in power failure, the reference frequency value will recover to default value F0.06 “UP/DOWN Preset Frequency” upon power recovery.
1	AI1	Terminal AI1, Terminal AI2 It means that the frequency is determined by the analog input terminal. AI1 refers to voltage input 0~10 V. AI2 can be used as either voltage input of 0 V~10 V or current input of 0/4 mA ~20 mA, which can be selected by the ② SW1/③ SW2 DIP switch on the control board.
2	AI2	
3	PULSE setup	② The reference frequency is given by the terminal pulse. Pulse signal reference specification: voltage 9 V ~12 V and frequency range 0 Hz ~200 Hz. ③ The reference frequency is given by the terminal pulse. Pulse signal reference specification: voltage 9 V ~30 V and frequency range 0 kHz ~50 kHz.
4	Communication	It means that the frequency source is given by the external source via the communication mode.
5	MS (Multi-step) Speed	When this mode is selected, group F6 “Input Terminals” and Group F9 “Multi-step speed and PLC” parameters shall be set to determine the relative relationship between the reference signal and the reference frequency.
6	Programmable Logic Controller (PLC)	Programmable Logic Controller (PLC) When PLC mode is selected, Group F9 “Multi-step Speed and PLC” parameters shall be set to determine the reference frequency.
7	PID	PID When PID is selected to be reference, Group F8 “PID Parameters” shall be set. The running frequency of the drive is the value after PID regulation.
8	Keypad potentiometer	

NOTE

In Freq. ref. 1, the Multi-step option is prior to other frequency reference options. If the terminal has selected multi-speed and active, the Freq. ref. 1 is determined by multi-speed no matter what value has F0.03 setup.
In option of Freq. ref. 1+ the Freq. ref. 2, the UP/DOWN digital setting of Freq. ref. 1 will be Up/Down overlapped on Frequency ref.-2. And the F0.06 Up/Down preset value is invalid.
Pulse reference can only be input from the multifunction input terminals X4 or X5.

Parameter	**F0.05** Frequency setting selection	**Range**	0~6	**Default**	0

Value	Text	Description
0	Freq. ref.1	Frequency reference 1 The frequency reference is determined by the selected channel of freq. ref-1.
1	Freq. ref.2	Frequency reference 2 The frequency reference is determined by the selected channel of freq. ref-2
2	Freq. ref.1+ Freq. ref.2	Frequency reference 1 + Frequency reference 2
3	Switch between Freq.ref.1 & Freq.ref.2 by terminal	The frequency reference can switch between the Frequency ref. 1 and Frequency ref.2 through the multifunction input terminal. When the terminal with "Freq. source switching" setting is active, the frequency reference is determined by freq. ref.-2. When the terminal with "Freq. source switching" setting is invalid or the terminal has no setting of "Freq. source switching", the frequency reference is determined by frequency ref.-1.
4	Switch between (Freq.ref.1+ Freq.ref.2) & Freq.ref.1 by terminal	Terminal switching between (Freq. ref.1+ Freq. ref.2) & Freq. ref.1 When the "Freq. source switching" terminal is invalid, the frequency reference is determined by Freq. ref.1+ Freq. ref.2. When the "Freq. source switching" terminal is active, the frequency reference is determined by Freq. ref.1
5	MIN (Freq.ref.1, Freq. ref.2)	MIN (Frequency reference 1, Frequency reference 2)
6	MAX (Freq.ref.1, Freq. ref.2)	MAX (Frequency reference 1, Frequency reference 2) The frequency reference is determined by frequency setting 1 and frequency setting 2.

Parameter	**F0.06** UP/DOWN Preset Freq.	**Range**	0.00~Max frequency	**Default**	50.00 Hz

When the frequency source has selected “Digital setup” or “Terminals UP/DN”, this function code is the initial value of frequency digital setup of the drive.

Parameter	**F0.07** Terminal UP/DOWN rate	**Range**	0.01~50.00Hz/s	**Default**	1.00 Hz/s

Terminal UP/DOWN rate is the changing rate in terminal or keypad ▲ and ▼ setting.

Parameter	**F0.08** UP/DOWN function source select	**Range**	0~2	**Default**	1

This parameter is used to select the UP/DOWN channel in Digital frequency reference setting.

Value	Text	Description
0	Keypad and terminal	Active in both keypad and terminal UP/DOWN
1	Keypad	Active only in keypad UP/DOWN
2	Terminal	Active only in terminal UP/DOWN

Parameter	**F0.09** UP/DOWN data saving selection	**Range**	0~2	**Default**	0

Value	Text	Description
0	Be saved in power failure	Setting data saved in power failure. This option means the frequency upon power recovery is the frequency after Up/Down setting before power failure.
1	Not saved in power failure	Setting not saved in power failure. This option means that the frequency upon power recovery is the preset Up/Down frequency value in F0.06. The Up/Down modification before power failure is cleared.
2	Be cleared to 0 after stop	Setting cleared to 0 after stop. The Up/Down setting during running will be cleared after the drive stop. The frequency upon restart will be preset Up/Down frequency value in F0.06. And the modification part is cleared.

Parameter		**Range**		**Default**	
	F0.10 Basic frequency		0.10~550.0 Hz		50.00 Hz
	F0.11 Max frequency		MAX [50.00Hz, Freq. upper limit, Reference frequency] ~550.0Hz		50.00 Hz
	F0.12 Freq. upper limit		Freq. lower limit~Max freq.		50.00 Hz
	F0.13 Freq. lower limit		0.00~Frequency upper limit		0.00 Hz
	F0.14 Max output voltage		110~440 V		(Depends on model)

The basic frequency (F_b) is the Min. output frequency when the drive output the Max. voltage. Usually, the motor rated frequency can be treated as basic frequency.
The max frequency (F_{max}) is the highest frequency that the drive can output.
The frequency upper limit (F_H) and frequency lower limit (F_L) are the maximum and minimum operating frequency of the motor set according to the production process technique requirements.
The maximum output voltage Vmax is the output voltage when the drive is in basic operating frequency. Normally it is the motor rated voltage.
The relationship of basic frequency, Max output frequency, frequency upper limit, the maximum output voltage and the Max. output voltage is shown in Figure 6-1.

Figure 6-1 V/F characteristic diagram

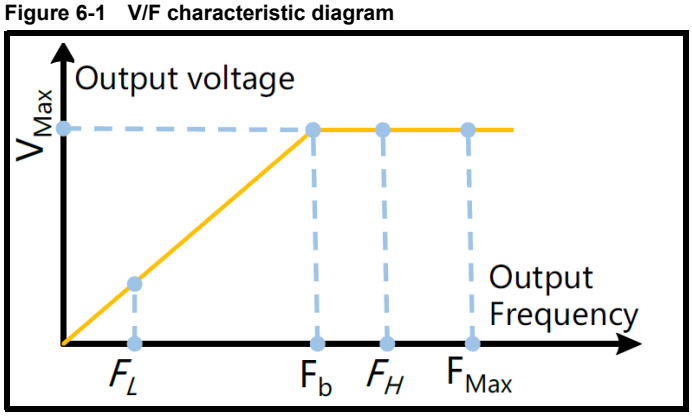

Parameter	**F0.15** Switching freq.	**Range**	1.0~16.0 kHz	**Default**	Depends on model

This parameter is used to adjust the switching frequency of the drive. The drive power ratings and according switching frequency value range is shown as following in Table 6-1. The adjustment of switching frequency will have influences on motor noise, motor temperature rising, and drive temperature rising as shown on Table 6-2.

Table 6-1 Drive power ratings and according switching frequency

Model	Range	Factory default value
Type G: 2.2~11 kW Type P: 4~15 kW	1.0~16.0 kHz	8.0 kHz
Type G: 15~22 kW Type P: 18.5~30 kW	1.0~10.0 kHz	6.0 kHz
Type G: 30~45 kW Type P: 37~55 kW	1.0~10.0 kHz	4.0 kHz
Type G: 55~75 kW Type P: 75~90 kW	1.0~6.0 kHz	3.0 kHz
Type G: 2.2~11 kW Type P: 4~15 kW	1.0~3.0 kHz	2.0 kHz

Table 6-2 Temperature influences of switching frequency

Switching frequency	Low ⟶ High
Motor noise	High ⟶ Low
Motor temperature rise	High ⟶ Low
Output current waveform	Poor ⟶ Good
Drive temperature rise	Low ⟶ High
Leakage current	Low ⟶ High
External radiation interference	Low ⟶ High

Parameter	**F0.16** Switching freq. auto-adjust	**Range**	0~1	**Default**	0

Value	Text	Description
0	Disable	Disable (No-adjustment) Switching frequency will not be adjusted automatically according to the temperature of drive.
1	Enable	Enable (Auto-adjustment) Drive can automatically adjust switching frequency through detection of temperature and the level of load. The auto-adjusts is to keep drive running at light load with low noise and keep the temperature within control at heavy load, and thus maintain the reliable and continuous running.

Parameter	**F0.17** Keypad direction	**Range**	0~1	**Default**	0

This parameter is used to select the motor rotation direction when the drive running command channel is keypad.

Value	Text	Description
0	Forward	Forward rotation
1	Reverse	Reverse rotation

Parameter	**F0.18** Motor wiring direction	**Range**	0~1	**Default**	0

The drive output FWD direction might be different from FWD direction of motor.

User can change the motor phases wiring sequence or change this parameter to make them agree with each other.

Value	Text
0	Positive sequence
1	Reverse sequence

Parameter	**F0.19** Acc. time1	Range	0.1~3600 s	Default	Depends on model
	F0.20 Dec. time1		0.1~3600 s		Depends on model

Acceleration time: The time that the drive accelerates from 0 Hz to maximum output frequency (F0.11).

Deceleration time: The time that the drive decelerates from maximum frequency (F0.11) to 0 Hz.

This series drive has defined 4 types of Acc/Dec time. Here, Acc/Dec time 1 is defined, and Acc/Dec time 2~4 can be defined in F2.03~F2.08. User can select different Acc/Dec time by external multifunction input terminal. Acc.1/Dec.1 is taken as default.

Figure 6-2 Schematic diagram for acceleration/deceleration time

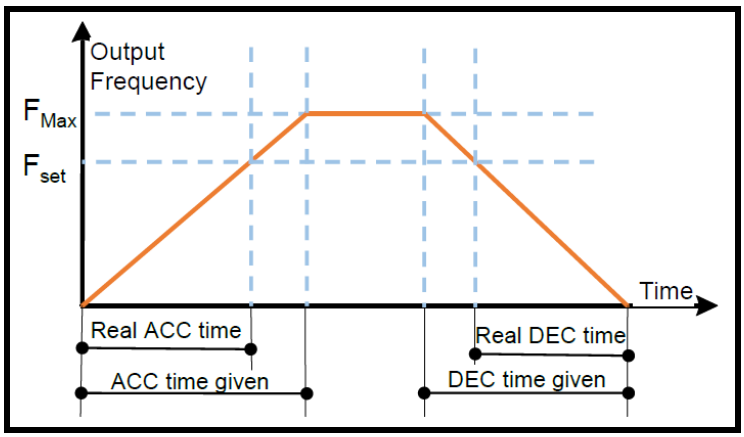

NOTE

The default value of acceleration and deceleration time:

7.5 kW and below: 6.0 seconds
11 kW~22 kW: 20.0 seconds
30 kW~110 kW: 60.0 seconds
132 kW and above: 90.0 seconds

6.2 Start and stop group (F1)

Code	Description	Setting range	Default	Modify	Modbus Address
F1.00	② Start mode	0: Start directly 1: DC injection brake first and then start at start freq.	0: Start directly	o	0200H
	③ Start mode	0: Start directly 1: DC injection brake first and then start at start freq. 2: Speed tracking and start			
F1.01	Start freq.	0.10~60.00 Hz	0.50 Hz	o	0201H
F1.02	Start freq. hold time	0.0~10.0 s	0.0 s	o	0202H
F1.03	② DC brake current at start	G: 0.0~100.0 % rated current	000.00 %	o	0203H
	③ DC brake current at start	G: 0.0~100.0 % rated current P: 0.0~80.0 % rated current			
F1.04	DC brake time at start	0.0~30.0 s	0.0 s	o	0204H
F1.05	Acc.Dec. mode	0: Linear 1: S-curve	0: Linear	o	0205H
F1.06	Time of S-curve initial stage	10.0~50.0 %	30.0 %	o	0206H
F1.07	Time of S-curve rising stage	10.0~80.0 %	40.0 %	o	0207H
F1.08	Stop mode	0: Deceleration to stop 1: Coast to stop 2: Deceleration+DC braking	0: Deceleration to stop	x	0208H
F1.09	DC brake trigger frequency at stop	00.00~99.99 100.0~550.0 Hz	00.00 Hz	o	0209H
F1.10	DC brake waiting time at stop	0.00~10.00 s	0.00 s	o	020AH
F1.11	② DC brake current at stop	000.0~100.0 % rated current	0.0 %	o	020BH
	③ DC brake current at stop (Rated current)	G: 0.0~100.0 % P: 0.0~80.0 %			
F1.12	DC brake time at stop	0.0~30.0 s	0.0 s	o	020CH
F1.13	Energy consumption brake validity	0: Disabled 1: Enabled	0: Disabled	o	020DH
F1.14	Energy consumption brake action voltage	380 V: 650~750 V 220 V: 360~390 V	700 V 380 V	o	020EH
F1.15	Power failure and fault restart	0: Disable 1: Enabled for power failure 2: Enabled for fault 3: Enabled for both **NOTE** Power recovery restart is only valid for terminal 2-wires mode. Fault restart is invalid for under-voltage fault.	0: Disable	o	020FH
F1.16	③ Waiting time for restart	0.0~3600 s	0.0 s	o	0210H
F1.18	③ Rotational speed tracking direction inspection	0: Disabled 1: Enable	0: Disabled	o	0212H
F1.19	③ Rotational speed tracking direction inspection time	10~1000 ms	50 ms	o	0213H

Parameter	**F1.00** Start mode	Range	② 0~1 ③ 0~2	Default	0

Value	Text	Description
0	Start directly	The drive starts according to the start frequency (F1.01) and the start frequency holding time (F1.02).
1	DC injection brake first and then start at start freq.	DC brake first and then start at start frequency. The drive performs DC braking first and then starts in mode-0. It is applicable to the applications of small inertia loads where reverse rotation is likely to occur.
2	Speed tracking and start	The drive detects the motor rotation speed first and then starts from the detected speed and Acc./Dec. to preset frequency. This results in smooth starting without impact. NOTE The 18.5 kW and above ratings has inbuilt speed tracking card.

Parameter	**F1.01** Start freq.	Range	0.10~60.00 Hz	Default	0.50 Hz
	F1.02 Start freq. holding time		0.0~10.0 s		0.0 s

Start frequency is the initial frequency at which the drive starts, see F_S as shown in Figure 6-3; holding time of starting frequency is the time during which the drive operates at the start frequency, see t_1 as shown in Figure 6-3:

Figure 6-3 Start frequency and Start frequency holding time

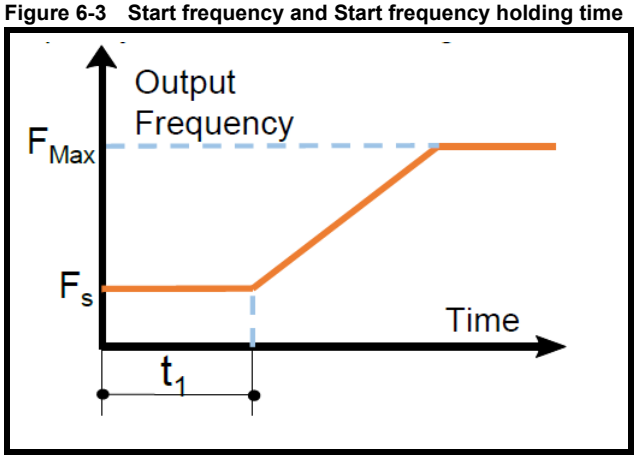

NOTE

Starting frequency is not restricted by the frequency lower limit.

Parameter	**F1.03** DC brake current at start (Rated current)	Range	② G: 0.0~100.0 % ③ G: 0.0~100.0 % ③ P: 0.0~80.0 %	Default	0.0 %
	F1.04 DC brake time at start		0.0~30.0 s		0.0 s

These parameters are only valid when the start mode selects “DC brake first and then start at start frequency” (F1.00=1). The higher the DC brake current is, the higher the brake force.

NOTE

If DC brake time or brake current is zero, the DC braking is invalid.

Parameter	**F1.05** Acc./Dec. mode	Range	0~1	Default	0

Value	Text	Description
0	Linear	The output frequency increases or decreases linearly. The speed changes according to preset acceleration/ deceleration time. NE200/300 series has 4 types of Acc./Dec. time which can be selected via multi-functional input terminals.
1	S-curve	The output frequency increases or decreases along the S curve. S curve is generally used in the applications where smooth start and stop is required such as elevator and conveyor belt. Refer to F1.06 and F1.07 for S curve parameter setting.

Parameter	**F1.06** Time of S-curve initial stage	**Range**	10.0~50.0 %	**Default**	30.0 %
	F1.07 Time of S-curve rising stage		10.0~80.0 %		40.0 %

The parameters of F1.06 and F1.07 are valid only when Acceleration /Deceleration mode is S-curve (F1.05=1) and F1.06+F1.07≤ 90 %.
Starting stage of S-curve is shown in Figure 6-4 as ①, where the changing rate of output frequency increases from 0;
Rising stage of S-curve is shown in Figure 6-4 as ②, where the changing rate of output frequency is constant;
Ending stage of S-curve is shown in Figure 6-4 as ③, where the changing rate of output frequency decreases to zero.

Figure 6-4 S-curve acceleration/deceleration

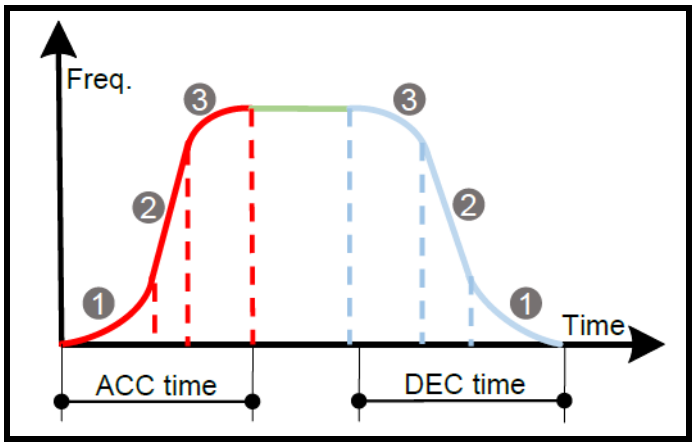

Parameter	**F1.08** Stop mode	**Range**	0~2	**Default**	0

Value	Text	Description
0	Deceleration to stop	After receiving the stop command, the drive reduces its output frequency according to the Dec time, and stops when the frequency decreases to zero.
1	Coast to stop	After receiving the stop command, the drive stops PWM output immediately and the load gradually stop under the effect of mechanical inertia.
2	Deceleration +DC braking	After receiving the stop command, the drive reduces its output frequency according to the Dec time and performs DC braking when its output frequency reaches the preset trigger frequency for DC braking. The relative parameters are defined in F1.09~F1.12.

Parameter	**F1.09** DC brake trigger frequency at stop	**Range**	00.00~99.99 Hz 100.0~550.0 Hz	**Default**	0.00 %
	F1.10 DC brake waiting time at stop		10.00~10.00 s		0.00 s
	F1.11 DC brake current at stop		G: 0.0~100.0 % rated current P: 0.0~80.0 % rated current		000.0 %
	F1.12 DC brake time at stop		0.0~30.0 s		0.0 s

DC brake trigger frequency at stop is the frequency at which DC brake action begins during Dec-to-stop process.
DC brake waiting time at stop: The holding time before doing the DC on brake.
During this holding time the drive stops the output. It is used to prevent the over-current or over-voltage faults caused by DC brake when the speed is relatively high.
DC brake current at stop: It refers to the DC braking injection amount. The higher this value, the stronger the DC brake effect.
DC brake time at stop: It refers to the time span when DC braking is acting.

NOTE

When DC brake current or DC brake time at stop is zero, it indicates there is no DC brake process.

Parameter	**F1.13** Energy consumption brake validity	Range	0~1	Default	0

Value	Text
0	Disabled
1	Enabled

For large rotary inertia applications where rapid stop is required, the drive can be equipped with matched braking unit and braking resistors and proper braking parameters setting to support fast braking and stop.

NOTE

For NE300, is only valid for 22 kW and above.

Parameter	**F1.14** Energy consumption brake action voltage	Range	380 V: 650~750 V 220 V: 360~390 V	Default	700 V 380 V

This parameter is to set the action voltage of DC bus for energy consumption brake. The proper setting can get effective brake of the load.

Parameter	**F1.15** Power failure and fault restart	Range	0~3	Default	0

Value	Text	Description
0	Disable	Drive will not automatically restart after power recovery until run command is given.
1	Enabled for power failure	In case of power failure and power-on again, if STOP command is not given during restart-waiting time (F1.16), drive will restart automatically.
2	Enabled for fault	After drive get faults during running, if the stop command is not given during fault stage or restart-waiting time (F1.16), the drive will restart automatically after fault reset.
3	Enabled for both	Enabled for both power failure and fault. The automatic restart function is enabled for both power failure recovery and faults reset situations as explained above.

NOTE

The user needs to be careful when using this function. Inappropriate setting might cause damage of machinery or injury to personnel.

Parameter	③ **F1.16** Waiting time for re-start	Range	0.0~36.0 s	Default	3.0 s

This function parameter defines the interval between the start and last stop. This is mainly used for demagnetization of the motor to prevent abnormal jump in the output of the frequency converter when the starting. The value for low-power frequency converter can be appropriately reduced.

Parameter	③ **F1.18** Rotational speed tracking direction inspection	Range	0~1	Default	0
	③ **F1.19** Rotational speed tracking direction inspection time		10~1000 ms		50 ms

F1.18 and F1.19 only for NE300.

F1.18 is for selecting whether the rotational speed tracking direction inspection is valid.

Value	Text
0	Disable
1	Enable

NOTE

For F1.19: The motor start method is the DC brake mode while the motor frequency is below 2 Hz, and the set value of DC brake current and brake time is not zero. The motor start method is normal from the zero frequency if the set value of the DC brake current and brake time is zero.

6.3 Auxiliary running function group (F2)

Code	Description	Setting range	Default	Modify	Modbus Address
F2.00	Jog running freq.	0.0~50.00 Hz	5.00 Hz	o	0300H
F2.01	Jog Acc. time	② 0.1~360.0 s ③ 0.0~3600.0 s	② 6.00 s ③ 20.0 s	o	0301H
F2.02	Jog Dec. time	② 0.1~360.0 s ③ 0.0~3600.0 s	② 6.00 s ③ 20.0 s	o	0302H
F2.03	Acc. time2	② 0.1~360.0 s ③ 0.0~3600.0 s	② 6.00 s ③ 20.0 s	o	0303H
F2.04	Dec. time2	② 0.1~360.0 s ③ 0.0~3600.0 s	② 6.00 s ③ 20.0 s	o	0304H
F2.05	Acc. time3	② 0.1~360.0 s ③ 0.0~3600.0 s	② 6.00 s ③ 20.0 s	o	0305H
F2.06	Dec. time3	② 0.1~360.0 s ③ 0.0~3600.0 s	② 6.00 s ③ 20.0 s	o	0306H
F2.07	Acc. time4	② 0.1~360.0 s ③ 0.0~3600.0 s	② 6.00 s ③ 20.0 s	o	0307H
F2.08	Dec. time4	② 0.1~360.0 s ③ 0.0~3600.0 s	② 6.00 s ③ 20.0 s	o	0308H
F2.09	② Skip freq. 1	0.00~300.0 Hz	0.00 Hz	x	0309H
	③ Skip freq. 1	0.00~320.0 Hz			
F2.10	③ Skip freq. 2	0.00~320.0 Hz	0.00 Hz	x	030AH
F2.11	Skip freq. amplitude	0.00~15.00 Hz	0.00 Hz	x	030BH
F2.12	Anti-Reverse control	0: Reverse rotation allowed 1: Reverse rotation not allowed	0: Reverse rotation allowed	o	030CH
F2.13	Fwd/ Rev switch dead-zone time	0.0~3600 s	0.0 s	o	030DH
F2.14	Freq. lower-limit treatment	0: Run with frequency lower limit 1: Zero frequency operation	0: Run with frequency lower limit	x	030EH
F2.15	Reserved	Reserved	0	x	
F2.16	③ Energy-saving control select	0: Disable 1: Enable	1: Enable	o	0310H
F2.17	AVR Function	0: Disabled 1: Enabled 2: Disabled only at speed-down	2: Disabled only at speed-down	x	0311H
F2.18	Over modulation	0: Enabled 1: Disabled	1: Disabled	x	0312H
F2.19	③ Droop control	0.00~10.00 Hz	0.00 Hz	o	0313H
F2.20	Fan control mode	0: Auto mode 1: Always Running	0: Auto mode	x	0314H
F2.21	Instant-power-failure treatment	0: Disabled ② 1: Drop frequency (Reserved) ③ 1: Drop frequency 2: Stop directly	0: Disabled	o	0315H
F2.22	Instant-power-failure freq. drop rate	380 V: 410~600 V 220 V: 210~260 V	420 V 230 V	o	0316H
F2.23	Instant-power failure freq. drop point	1-800	400	o	0317H
F2.24	Motor speed display ratio	0.0~500.0 %	100.0 %	o	0318H
F2.25	UP/DOWN drop to minus frequency	0: Enabled 1: Disable	1: Disable	o	0319H
F2.26	ENTER key function	0: No special action 1: FWD/REV switching 2: RUN for forward; Enter for reverse; STOP for stop 3: Jog running	0: No special action	o	031AH
F2.27	Freq. resolution	0: 0.01 Hz 1: 0.1 Hz	0: 0.01 Hz	x	031BH

Code	Description	Setting range	Default	Modify	Modbus Address
F2.28	Acc.Dec. time unit	0: 0.1 s 1: 0.01 s	② 1: 0.01 s ③ 0: 0.1 s	x	031CH
F2.29	High freq. modulation mode	0: Asynchronous modulation 1: Synchronous modulation	0: Asynchronous modulation	x	031DH
F2.31	IO output Freq. baseline select while vector control	0: According to the Freq. after ACC/DEC speed 1: According to the current value	0: According to the Freq. after ACC/DEC speed	o	031FH
F2.32	PWM modulation mode	0: Uplink 1 6 Hz discrete modulation mode (5-stage mode), downlink 12 Hz continuous modulation mode (7-stage mode) 1: Fixed as z continuous modulation mode (7-stage mode)	0: Uplink 1 6 Hz discrete modulation mode (5-stage mode), downlink 12 Hz continuous modulation mode (7-stage mode)	o	0320H
F2.33	Threshold value of Zero Freq. running	0.0~550.0 Hz	0.0 Hz	o	0321H
F2.34	Range between start Freq. and threshold value of Zero Freq.	0.0~550.0 Hz	0.0 Hz	o	0322H
F2.35	Synchronous motor IQ filter	0: with filter 1: without filter	0: with filter	o	0323H
F2.36	Voltage modulation coefficient of synchronous motor with weak magnetic field	0.0~120.0 %	105.0 %	o	0324H
F2.37	Power calibration at low voltage	70.0~130.0 %	100.0 %	o	0325H
F2.38	Power calibration high voltage	70.0~130.0 %	100.0 %	o	0326H
F2.39	③ V/F current-limiting Kp	100~3000	500	o	0327H
F2.40	③ V/F current-limiting Ki	100~3000	500	o	0328H
F2.41	Linear velocity at 60 Hz	000~65000	6000	o	0329H
F2.42	Speed setting	0~65535 rpm	0 rpm	o	032AH
F2.43	Line speed setting	0.000~65.535	0.00	o	032BH
F2.44	Line speed displays decimal points	0: Integer 1: 1 decimal place 2: 2 decimal places 3: 3 decimal places	3	o	032CH
F2.45	Reference frequency of ACC/DEC time	0: Maximum frequency 1: 100 Hz 2: Set frequency	0	o	032DH
F2.46	③ Synchro parameter option 1	Units digit: 0: PWM unsubdivided 1: PWM subdivided Tens digit: 0: The position observer uses a reconstructed voltage 1: The position observer uses a given voltage	10H	x	032EH
F2.47	Fire alarm mode frequency	-320.00 to 320.00 Hz	0.00 Hz	o	032FH

Parameter	**F2.00** Jog running freq.	**Range**	0.0~50.00 Hz	**Default**	5.00 Hz
	F2.01 Jog Acc. time		② 0.1~360.0 s ③ 0.0~3600.0 s		② 6.00 s ③ 20.0 s
	F2.02 Jog Dec. time		② 0.1~360.0 s ③ 0.0~3600.0 s		② 6.00 s ③ 20.0 s

These parameters define the frequency and Acc/Dec time of the JOG operation.
In JOG operation, the drive starts according to starting mode 0 (F1.00=0 direct start) and stops according to stopping mode 0 (F1.08=0 Deceleration to stop).
The Jog acceleration time refers to the time the drive takes to accelerate form 0 Hz to Max. output frequency F0.11; the jog deceleration time refers to the time the drive takes to decelerate from Max. output frequency F0.11 to 0 Hz.

NOTE

When the jog Acc./Dec. time is set to 0, the drive jog deceleration mode is “coast to stop”.

Parameter	**F2.03** Acceleration time2	**Range**	② 0.1~360.0 s ③ 0.0~3600.0 s	**Default**	② 6.00 s ③ 20.0 s
	F2.04 Deceleration time2		② 0.1~360.0 s ③ 0.0~3600.0 s		② 6.00 s ③ 20.0 s
	F2.05 Acceleration time3		② 0.1~360.0 s ③ 0.0~3600.0 s		② 6.00 s ③ 20.0 s
	F2.06 Deceleration time3		② 0.1~360.0 s ③ 0.0~3600.0 s		② 6.00 s ③ 20.0 s
	F2.07 Acceleration time4		② 0.1~360.0 s ③ 0.0~3600.0 s		② 6.00 s ③ 20.0 s
	F2.08 Deceleration time4		② 0.1~360.0 s ③ 0.0~3600.0 s		② 6.00 s ③ 20.0 s

These parameters are to define Acc/Dec time 2, 3 and 4 respectively (Acc/Dec time 1 is defined in F0.19 and F0.20). Acc/Dec time 1, 2, 3 and 4 can be selected via external multifunction input terminals. If all terminals related with Acc/Dec time are invalid, the drive will take Acc/Dec time 1 as Acc/Dec time. However, when the drive chooses PLC or JOG operation, Acc/Dec time will not be controlled by external terminals, but be set by parameter of PLC or JOG.

Parameter	**F2.09** Skip freq. 1	**Range**	② 0.00~300.0 Hz ③ 0.00~320.0 Hz	**Default**	0.00 Hz
	③ **F2.10** Skip freq. 2		0.00~320.0 Hz		0.00 Hz
	F2.11 Skip frequency amplitude		0.00~15.00 Hz		0.00 Hz

To avoid mechanical resonant, the drive can skip over some running points, which is called skip frequency. As shown in Figure 6-5.

NE300 drives can set two skip frequency points, and the skip frequency amplitude can overlap or nesting. If overlapped, the range broadens. When all skip-freq. points value are set to 0.00 Hz, the jump function will be disabled.
Only one, skip frequency1, point for NE200.

Figure 6-5 Skip Frequency

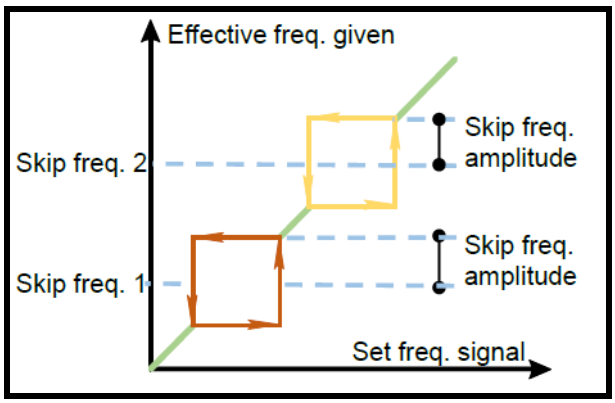

Parameter	**F2.12** Anti-reverse control	**Range**	0~1	**Default**	0

For some equipment, reverse operation may cause equipment damage. This function can be used to prevent reverse operation.

Value	Text
0	Reverse rotation allowed
1	Reverse rotation not allowed

Parameter	**F2.13** Fwd/ Rev switch dead-zone time	Range	0.0~3600 s	Default	0.0 s

It refers to the transition waiting time at zero frequency in process of rotation direction switching, i.e. from forward to reverse or from reverse to forward, as shown Figure 6-6.

Figure 6-6 FWD/REV switching

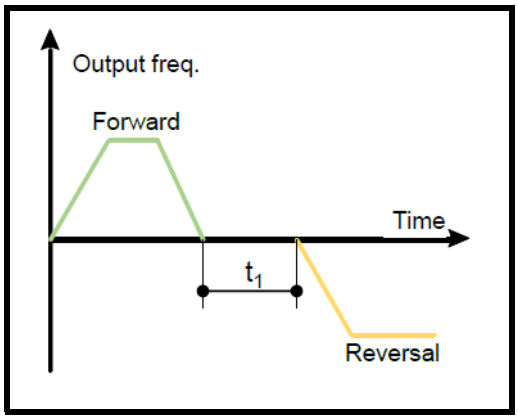

Parameter	**F2.14** Freq. lower-limit treatment	Range	0~1	Default	0

This parameter is used to select the running status of the drive when the setup frequency is lower than the frequency lower limit.

Value	Text
0	Run with frequency lower limit
1	Zero frequency operation

Parameter	**F2.15** Reserved	Range	Reserved	Default	0

Parameter	③ **F2.16** Energy-saving control select	Range	0~1	Default	1

Value	Text	Description
0	Disabled	The energy-saving control mode is disabled.
1	Enabled	The energy-saving control mode is enabled.

To adjust the output current to degrease the energy-saving of motor by inspecting the current of load while the motor is working in no-load or light-load status.

NOTE

This function is enabled while controlled by V/F mode.

Parameter	**F2.17** AVR function	Range	0~2	Default	2

Value	Text
0	Disabled
1	Enabled
2	Disabled only at speed-down

AVR means automatic output voltage regulation. When the input voltage deviates from rated value, AVR function can maintain constant voltage output. Normally AVR function is recommended to be active. At process of “deceleration to stop”.

Parameter	**F2.18** Over modulation	**Range**	0~1	**Default**	1

Value	Text
0	Enabled
1	Disabled

When the over modulation function is enabled, the drive voltage output capacity can be improved. However, if the output voltage is too high, the output current harmonics will increase.

Parameter	③ **F2.19** Droop control	**Range**	0.00~10.00 Hz	**Default**	0.00 Hz

When multiple drives drive the same load, the unbalanced load distribution due to difference speed causes the drive with faster speed to carry heavier load. The droop control characteristics makes the speed droop change along with the addition of load, which can lead to balanced load distribution.
This parameter is used to adjust the frequency change value of the drive with droop speed.

Parameter	**F2.20** Fan control mode	**Range**	0~1	**Default**	0

Value	Text	Description
0	Auto mode	The fan always runs when the drive is running. After the drive stops for three minutes, the internal temperature detection program will be activated to stop the fan or keep the fan running according to the IGBT's temperature.
1	Always Running	The fan always runs when the drive is power on.

Parameter	**F2.21** Instant-power-failure treatment	**Range**	0~2	**Default**	0

Value	Text	Description
0	Disabled	
1	② Drop frequency (Reserved) ③ Drop frequency	
2	Stop directly	When the bus voltage is lower than the instant power failure frequency drop point, the drive stops according to stop mode (F1.08).

Parameter	**F2.22** Instant-power-failure freq. drop point	**Range**	380 V: 410~600 V 220 V: 210~260 V	**Default**	420 V 230 V
	F2.23 Instant-power-failure freq. drop rate		1~800		400

These parameters define the value of the power failure frequency drop point and power failure frequency drop rate.
The larger the value is, the greater the regulation intensity is, and the larger the parameter is, the more likely the current waveform will oscillate.

Parameter	**F2.24** Motor speed display ratio	**Range**	0.0~500.0 %	**Default**	100.0 %

The motor speed display on the keypad is the actual motor speed×F2.24.

Parameter	**F2.25** UP/DOWN drop to minus frequency	**Range**	0~1	**Default**	1

Value	Text
0	Enabled
1	Disabled

Parameter	**F2.26** ENTER key function	Range	0~3	Default	0

Value	Text	Description
0	No special action	
1	Fwd/Rev switching	When the keypad control the start and stop, press ENTER key under monitoring status will switch the rotation direction.
2	Run for forward; Enter for Reverse; STOP for stop.	Under monitoring status.
3	Jog running	

NOTE

When MFK key defines RUN as forward, MFK as reverse, and STOP as stop (FE.01=7), the ENTER key shall not switch the rotation direction.

Parameter	**F2.27** Freq. resolution	Range	0~1	Default	0

Value	Text	Description
0	0.01 Hz	The drive Max running frequency can be up to 320.0 Hz.
1	0.1 Hz	The drive Max running frequency can be up to 3200.0 Hz.

Parameter	**F2.28** Acc./Dec time unit	Range	0~1	Default	0

Value	Text	Description
0	0.1 s	The drive longest Acc./Dec time is 3600 seconds.
1	0.01 s	The drive longest Acc./Dec time is 360 seconds.

Parameter	**F2.29** High freq. modulation mode	Range	0~1	Default	0

Value	Text
0	Asynchronous modulation
1	Synchronous modulation

When the frequency resolution is 0.01 Hz, the regulation is fixed to be asynchronous modulation. When the frequency resolution is 0.1 Hz, the regulation is asynchronous if this parameter F2.29=0; if this parameter F2.29=1, the switching frequency will be modulated according to present running frequency.

Parameter	**F2.31** IO output Freq. baseline select while vector control	Range	0~1	Default	0

Value	Text
0	According to the Freq. after ACC/DEC speed
1	According to the current value

This function code is used to select the baseline frequency of AO and IO input.

Example: The 0~10 V signal is the comparative linear output between the frequency after Acc./Dec. speed and frequency of max. output while F2.31=0. The 0~10 V signal is the comparative linear output between the real output frequency and the max. output frequency while F2.31=1.

Parameter	**F2.32** PWM modulation mode	Range	0~1	Default	0

Value	Text
0	Uplink 16 Hz discrete modulation mode (5-stage mode), downlink 12 Hz continuous modulation mode (7-stage mode)
1	Fixed as z continuous modulation mode (7-stage mode)

Parameter	**F2.33** Threshold value of Zero Freq. running	**Range**	0.0~550.0 Hz	**Default**	0 Hz
	F2.34 Range between start Freq. and threshold value of Zero Freq.		0.0~550.0 Hz		0 Hz

This function code is used for the 'Range between start Freq. and threshold value of Zero Freq' control.

Example: See Figure 6-7 The given channel of CCI current.

Process of start: The drive will be started while CCI is up to or over I_b, and the given is up to f_b, in the meantime, give the related frequency while the CCI value is ok after Acc. Speed during the Acc./Dcc. Duration given.

Process of stop: The drive will be stopped till the CCI current is I_a, will not be stopped instantly while the CCI current is I_b.

NOTE

f_a is defined as 'Threshold value of Zero Freq. running' (F2.33), f_b-f_a is defined as 'Range between start Freq. and threshold value of Zero Freq' (F2.34).

These function codes are used to avoid the start-stop of drive continually, used to realize the stand-by and sleep-mode.

Figure 6-7 Range between start Freq. and threshold value of Zero Freq.

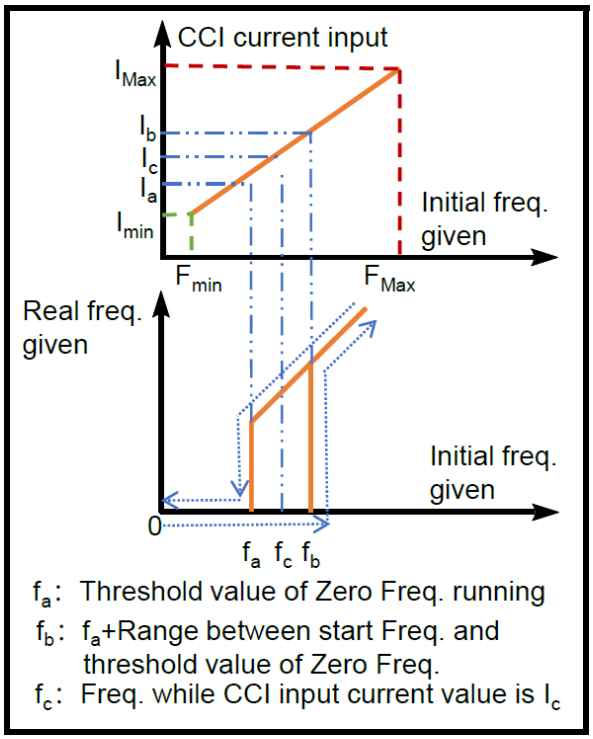

Parameter	**F2.35** Synchronous motor IQ filter	**Range**	0~1	**Default**	0

Value	Text
0	With filter
1	Without filter

Parameter	**F2.36** Voltage modulation coefficient of synchronous motor with weak magnetic field	**Range**	0.0~120.0 %	**Default**	105.0 %

It is used when the synchronous motor is magnetically weak. The larger the parameter is, the higher the output voltage of the frequency converter will be. However, if the parameter is too large, the unstable operation of the motor will be easily caused by waveform distortion.

Parameter	**F2.37** Power calibration at low voltage	**Range**	70.0~130.0 %	**Default**	100.0 %
	F2.38 Power calibration high voltage				
	③ **F2.39** V/F current-limiting Kp		100~3000		500
	③ **F2.40** V/F current-limiting Ki				

F2.37 and F2.38 are used to correct the output power calculated inside the drive when the grid voltage is too low and too high, respectively.

F2.39 and F2.40 are V/F control time-bound flow PID parameters, the greater the adjustment stronger, the weaker, too large may cause current oscillation, generally do not need to adjust these two parameters.

Parameter	**F2.41** Linear velocity at 60 Hz	**Range**	000~65000	**Default**	6000
	F2.42 Speed setting Range		0~65535 rpm		0
	F2.43 Line speed setting Range		0.000~65.535		0.00

	F2.44 Line speed displays decimal points		0~3		3

Value	Text
0	integer
1	1 decimal place
2	2 decimal places
3	3 decimal places

Parameter	**F2.45** Reference frequency of acceleration and deceleration time	**Range**	0~2	**Default**	0

Value	Text
0	Maximum frequency
1	100 Hz
2	Set frequency

Parameter	③ **F2.46** Synchro parameter option 1	**Range**	00H~11H	**Default**	10H

Value	Text
	Units digit
0	PWM unsubdivided
1	PWM subdivided
	Tens digit
0	The position observer uses a reconstructed voltage
1	The position observer uses a given voltage

Parameter	**F2.47** Fire alarm mode frequency	**Range**	-320.00~320.0 Hz	**Default**	0.00 Hz

It is necessary to set the destination of a digital input to 53 and for the corresponding digital input to be selected for fire mode to operate.

6.4 Vector Control Parameters (F3)

Code	Description	Setting range	Default	Modify	Modbus Address
F3.00	Speed loop proportional gain 1	1~3000	1000	o	0400H
F3.01	Speed loop integral time 1	1~3000	300	o	0401H
F3.02	PID Switching frequency 1	0.00~60.00 Hz	5.00 Hz	o	0402H
F3.03	Speed loop proportional gain 2	1~3000	800	o	0403H
F3.04	Speed loop integral time 2	1~3000	200	o	0404H
F3.05	PID Switching frequency 2	0.00~60.00 Hz	10.00 Hz	o	0405H
F3.06	Speed loop filter time constant	0~500 ms	② 2 ms ③ 3 ms	o	0406H
F3.07	Current loop proportional coefficient	0~6000	3000	o	0407H
F3.08	Current loop integral coefficient	0~6000	1500	o	0408H
F3.09	VC Slip compensation	000.0~200.0 %	100.0 %	o	0409H
F3.10	Torque control	0: Torque control Disabled 1: Torque digital setting(F3.11) 2: AI1 3: AI2 4: Reserved ② 4: Pulse ③ 5: communication 6: Keypad potentiometer	0: Torque control Disabled	o	040AH
F3.11	Torque digital setting	0.00~200.0 %	50.0 %	o	040BH
F3.12	Torque control	0: Digital limit of braking torque 1 (F3.25) 1: Digital limit of braking torque 2 (F3.13) 2: AI1 3: AI2 4 Pulse 5 communication 6 keypad potentiometer	0: Digital limit of braking torque 1 (F3.25)	o	040CH
F3.13	Torque control limit digital setting 2	0.0~200.0 %	50.0 %	o	040DH
F3.14	③ Encoder pulse number	1~65535	1024	o	040EH
F3.16	③ PG direction	0: Forward 1: Reverse	0: Forward	o	0410H
F3.17	Acceleration and deceleration limit when vector control	0: Limited 1: No limited	1: No limited	o	0411H
F3.18	SVC speed calculation filter	0~31	28	o	0412H
F3.19	SVC mode	0: Mode1 1: Mode2	0: Mode1	o	0413H
F3.20	SVC mode2 flux weakening coefficient	20~500 %	100 %	o	0414H
F3.21	Flux weakening control selection	0: Disable 1: Enable	0: Disable	o	0415H
F3.22	Torque limit compensation coefficient while constant power output	60.0~300.0 %	② 85.0 % ③ 200.0 %	o	0416H
F3.23	Reserved	Reserved	Reserved	Reserved	
F3.24	Torque ref. terminal single modulation	0.0~10.0 %	0.0 %	o	0418H
F3.25	Torque ref. terminal total modulation	0.0~100.0 %	50.0 %	o	0419H
F3.26	Torque limit in vector control mode	0~300.0 %	150.0 %	o	041AH
F3.27	Torque boost cut-off frequency in torque control mode	0.00~15.00 Hz	12.00 Hz	o	041BH
F3.28	Torque boost amount in torque control mode	0.0~20.0 %	15.0 %	o	041CH

Code	Description	Setting range	Default	Modify	Modbus Address
F3.29	Synchro parameters Option 2	Units: 0: PM-SVC1 (Strong low speed carrying capacity) 1: PM-SVC2 (Good performance at high speed) 2: Automatic switch between low speed PM-SVC1 and high speed PM-SVC2 Tens: 0: The current loop parameter is not adjusted when the motor self-learning 1: The current loop parameter is adjusted when the motor self-learning	0101H	x	041DH
F3.31	Synchronous motor initial position detection	0: Do not detect 1: Detect in power-on first run 2: Detect every time	2: Detect every time	o	041FH
F3.32	Synchronous motor initial position detection current	50~120 %	90 %	o	0420H
F3.33	Initial position detection pulse width	0~1200 μs	0	o	0421H
F3.34	Initial position detection pulse width actual value	0~1200 μs	0	*	0422H
F3.35	Synchronous motor braking torque limit	0.0~300.0 %	150.0 %	o	0423H
F3.36	Synchronous motor flux weakening mode	0: Flux weakening mode is invalid 1: Flux weakening mode is valid	0: Flux weakening mode is invalid	o	0424H
F3.37	Max flux weakening current	0~100.0 %	50.0 %	o	0425H
F3.38	Flux weakening regulation proportional coefficient	0~3000	500	o	0426H
F3.39	Flux weakening regulation integration coefficient	0~3000	800	o	0427H
F3.40	Synchronous motor low speed Min. current	0~100 %	30 %	o	0428H
F3.41	Synchronous motor low speed switching frequency	1.0~16.0 kHz	2.0 kHz	o	0429H
F3.42	Synchronous motor Min excitation current	-100.0~100.0 %	0.0 %	o	042AH
F3.43	Switching frequency between I/F and SVC	0~550.00 Hz	0.00 Hz	o	042BH
F3.44	Synchronous motor position evaluating low speed filter	2~100	40	o	042CH
F3.45	Synchronous motor position evaluating high speed filter	2~100	15	o	042DH
F3.46	③ Encoder type	0: encoderless 1: ABZ incremental encoder 2: UVW incremental encoder 3: Rotating transformer	0: encoderless	x	042EH
F3.47	③ Number of rotating transformer poles	2~80	2	x	042FH
F3.48	③ Redundancy number of rotating transformer fault detection	0~500	200	o	0430H
F3.51	③ Initial Angle of synchronous motor	0.0~359.9°	0.0°	x	0433H
F3.52	③ Z-axis pulse Angle of synchronous motor	0.0~359.9°	0.0°	x	0434H
F3.53	③ Encoder mechanical Angle	0.0~359.9°	0.0°	-	0435H
F3.54	③ ABZ encoder power-on first running position detection	0: Do not detect 1: detect	1: Detect	x	0436H
F3.55	③ Self-learning encoder detection	Units: 0: The number of AB phase pulses is not etected 1: Detect the number of AB phase pulses Tens: 0: Encoder direction is not detected 1: Detecting encoder direction	11: Detecting encoder direction	x	0437H
F3.56	③ Calibration Z position	0: The Z signal does not calibrate the position 1: Z signal calibration position	1: Z signal calibration position	x	0438H

Code	Description	Setting range	Default	Modify	Modbus Address
F3.57	③ Disconnection fault detection	Units: 0: Z signal break is not detected 1: Detection when Z signal breaks Tens: 0: AB phase break is not detected 1: AB phase break detection Hundreds: 0: Encoder reverse function failure is not detected 1: Detection when the encoder reverse function fails	111: Detection when the encoder reverse function fails	x	0439H
F3.58	③ Stall detection	0.00~100.00 Hz	10.00 Hz	o	043AH
F3.59	③ Stall detection time	0.0~100.0 s	0.0 s	o	043BH
F3.60	③ Current angle of motor	0.0~359.9°	0.0°	-	043CH
F3.61	③ UVW state of UVW encoder	0~7	1	-	043DH
F3.62	③ Encoder and motor operating status	0: Encoder and motor in the same direction 1: Encoder and motor in reverse direction	0: Encoder and motor in the same direction	-	043EH
F3.63	③ Z signal counting status	0~0xFFFF	0	-	043FH
F3.64	③ ABZ encoder position calibration count	0~0xFFFF	0	-	0440H
F3.65	③ Torque current set selection	0: Speed loop output 1: CAN communication (reserved) 2: AI1 3: AI2 4: 485 communication	0: Speed loop output	x	0441H
F3.66	③ Motor turns	-32767~32767	0	-	0442H
F3.67	③ Current position of motor	- Encoder pulse number *4~ encoder pulse number *4	0	-	0443H
F3.68	The acceleration and deceleration time of the given torque current When F3.65 is non-0	0.00~50.00 s	0	o	0444H
F3.69	The speed positive limiting selection When F3.65 is not 0	0: Digital setting (F3.70) 1: AI1 2: AI2 3: Pulse input 4: 485 Communication Settings 5: Keyboard potentiometer	0: Digital setting (F3.70)	o	0445H
F3.70	Digital positive limiting Setting	0~550.0 Hz	50.0 Hz	o	0446H
F3.71	The speed reverse limiting selection when F3.65 is not 0	0: Digital setting (F3.72) 1: AI1 2: AI2 3: Pulse input 4: 485 Communication Setting 5: Keyboard potentiometer	0: Digital setting (F3.72)	o	0447H
F3.72	Digital reverse limiting Setting	0~550.0 Hz	0.00 Hz	o	0448H

Parameter	**F3.00** Speed loop proportional gain 1	**Range**	1~3000	**Default**	1000
	F3.01 Speed loop integral time 1		1~3000		300
	F3.02 PID Switching frequency 1		0.0~60.00 Hz		5.00 Hz
	F3.03 Speed loop proportional gain 2		1~3000		800
	F3.04 Speed loop integral time 2		1~3000		200
	F3.05 PID Switching frequency 2		0.0~60.00 Hz		10.00 Hz

F3.00 and F3.01 are PI adjustment parameters when the running frequency is lower than switching frequency 1 (F3.02). F3.03 and F3.04 are PI adjustment parameters when the running frequency is higher than switching frequency 2. PI parameter of frequency range between the switching frequency 1 and switching frequency 2 is the linear conversion from two groups of PI parameters, as shown in Figure 6-8:

Figure 6-8 Schematic diagram of speed loop PI parameter

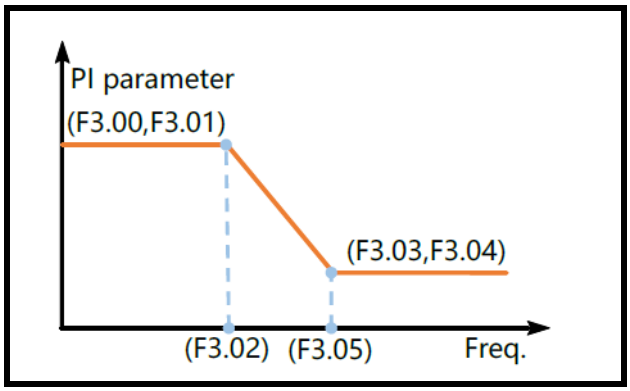

The speed dynamic response characteristics of the vector control can be adjusted by setting the proportional coefficient and integration time of the speed regulator. Increasing the proportional gain or reducing the integration time can accelerate the dynamic response of the speed loop. However, if the proportional gain is too large or the integration time is too short, it will cause the oscillation of the system.

Parameter	**F3.06** Speed loop filtering time constant	**Range**	0~500 ms	**Default**	② 2 ms ③ 3 ms

This parameter determines the value of speed loop filtering time and don't need to be adjusted generally.

Parameter	**F3.07** Current loop proportional coefficient	**Range**	0~6000	**Default**	3000
	F3.08 Current loop integral coefficient		0~6000		1500

These function codes define the current loop PID parameters; they influence directly the control precision and speed dynamic response and needs no adjustment generally.

Parameter	**F3.09** VC Slip compensation	**Range**	0.0~200.0 %	**Default**	100.0 %

When the load increases, the motor slip increases, and motor speed drops down. Using this slip compensation parameter, the motor speed can be maintained constant. The adjustment is instructed as follows:

When the motor speed is lower than the target value, increase the vector control slip compensation value.

When the motor speed is higher than the target value, decrease the vector control slip compensation value.

Parameter	**F3.10** Torque control	**Range**	0~6	**Default**	0

Value	Text	Description
0	Torque control disabled	When the torque control is disabled, the drive performs speed control. The drive outputs frequency according to the setup frequency command; and the output torque automatically matches the load torque.
1	Torque digital setting (F3.11)	
2	AI1	Analog Input 1 as Torque Reference
3	AI2	Analog Input 2 as Torque Reference
4	Reserved ② Pulse ③	③ Pulse input as Torque Reference
5	Communication	
6	Keypad potentiometer	

1~5: Torque control is active

When the drive is in torque control, the drive output the torque according to the torque command which is defined in this parameter. And the output frequency will automatically matche to the load speed. But the output frequency is limited F3.12.

NOTE

Analog and pulse input physical quantity is corresponding to torque setup. Torque control is valid only when the Control Mode is sensor-less vector control-2 or vector control with encoder speed feedback.

Parameter	**F3.11** Torque digital setting	**Range**	0.0~200.0 %	**Default**	50.0 %

This parameter is used to define the value of torque digital setting.

Parameter	**F3.12** Torque control speed limit	**Range**	0~6	**Default**	0

This parameter is used to define the value of speed limit when the drive is running in torque control mode.

Value	Text
0	Digital limit of braking torque 1 (F3.25)
1	Digital limit of braking torque 2 (F3.13)
2	AI1
3	AI2
4	Pulse
5	Communication
6	Keypad potentiometer

Parameter	**F3.13** Torque control limit digital setting 2	**Range**	0.0~200.0 %	**Default**	50. %

Setting the value of torque control upper limit digital setting (F3.12=0).

Parameter	③ **F3.14** Encoder pulse number	**Range**	0~65535	**Default**	1024

Setting the pulse quantity per circle of Encoder.

NOTE

The operation status of motor will be abnormal if the pulse quantity of encoder set is not correct while controlled by the vector sensor. Please exchange the wiring of the A,B phases or adjust the value of F3.16 if the operation status of motor is abnormal still while the pulse quantity set is right.

Parameter	③ **F3.16** PG direction	**Range**	0~1	**Default**	0

Value	Text
0	Forward
1	Reverse

Reverses the encoder feedback without requiring any re-wiring of the encoder.

Parameter	**F3.17** Acceleration and deceleration limit when vector control	**Range**	0~1	**Default**	1

Value	Text	Description
0	Limited	This means the real output frequency will limit the frequency after ACC/DEC speed while controlled by PG option.
1	Not limited	

Parameter	**F3.18** SVC speed calculation filter	**Range**	0~31	**Default**	28
	F3.19 SVC mode		0~1		0
	F3.20 SVC mode2 flux weakening coefficient		20~500 %		100 %

Parameter	**F3.21** Field-weakening function	**Range**	0~1	**Default**	0

Value	Text
0	Disabled
1	Enabled

Parameter	**F3.22** Torque limit compensation coefficient while constant power output	**Range**	60.0~300.0 %	**Default**	200 %

This parameter is used to compensate the torque limit in constant power zone. Appropriate setting can improve the drive Acc/Dec time and output torque.

Parameter	**F3.23** Reserved	**Range**	Reserved	**Default**	
	F3.24 Torque ref. terminal single modulation		0.00~10.00 %		0.00 %
	F3.25 Torque ref. terminal total modulation		0.0~100 %		50.0 %

When the torque reference is digital mount, this parameter sets the single time modulation amount and total modulation amount.

Parameter	**F3.26** Torque limit in vector control mode	**Range**	0.0~300.0 %	**Default**	150.0 %

When it is asynchronous motor vector control, this value is the torque limit value of motoring and generating. When it is synchronous motor control, this value is the motor's electric torque limit.

Parameter	**F3.27** Torque boost cut-off frequency in torque control mode	**Range**	0.00~15.00 Hz	**Default**	12.00 Hz
	F3.28 Torque boost amount in torque control mode		0.0~20.0 %		15.0 %

This parameter is valid when vector torque control mode (F3.10 ≠0). It is used to boost the given torque volume at low speed, i.e. the final given torque value is calculated on given torque value, F3.27, and F3.28.

Parameter	**F3.29** Synchro parameters Option 2	**Range**		**Default**	0101H

Units:
0: PM-SVC1(Strong low speed carrying capacity)
1: PM-SVC2(Good performance at high speed)
2: Automatic switch between low speed PM-SVC1 and high speed PM-SVC2
Tens:
0: The current loop parameter is not adjusted when the motor self-learning
1: The current loop parameter is adjusted when the motor self-learning

Parameter	**F3.31** Synchronous motor initial position detection	**Range**	0~2	**Default**	2

Value	Text	Description
0	Do not detect	Drive runs without detecting the motor rotor initial position
1	Detect in power-on first run	In first-run after power on, the motor rotor initial position will be detected. If it is not first-run, the motor rotor initial position will not be checked.
2	Detect every time	Detect the motor rotor initial position at every run.

Parameter	**F3.32** Synchronous motor initial position detection current	**Range**	50~120 %	**Default**	90 %

This is to set the detection current value for motor's initial position. The smaller the current value, the lower the detection noise; but too small current value might cause incorrect detection.

Parameter	**F3.33** Initial position detection pulse width	**Range**	0~1200 μs	**Default**	0 μs

When the setting value of this parameter is 0, the detection pulse width of detection position is searched gradually from small pulse to larger pulse according to preset detection current value. When this parameter is not 0, the detection position pulse width will be calculated from this parameter and thus decrease the initial position detection time. This parameter will be automatically filled with actual pulse width after parameter tuning operation.

Parameter	**F3.34** Initial position detection pulse width actual value	**Range**	0~1200 μs	**Default**	0 μs

This value is the actual pulse width in every time position detection.

Parameter	**F3.35** Synchronous motor braking torque limit	**Range**	0.0~300.0 %	**Default**	150.0 %

This parameter is to set the synchronous motor braking torque limitation. If the motor gets over-voltage fault during running, try to reduce this parameter setting value.

Parameter	**F3.36** Synchronous motor flux weakening mode	**Range**	0~1	**Default**	0

Value	Text
0	Flux weakening mode is invalid
1	Flux weakening mode is valid

Parameter	**F3.37** Max flux weakening current	**Range**	0~100 %	**Default**	50 %

The actual running flux-weakening current is equal to the theoretical flux-weakening current by flux-weakening gain. Increasing this value will improve the dynamic performance of the motor, but too high a value could cause instability. A typical value would be 50 %.

Parameter	**F3.38** Flux weakening regulation proportional coefficient	**Range**	0~3000	**Default**	500
	F3.39 Flux weakening regulation integration coefficient		0~3000		800

Adjusts the flux weakening output current automatically according to the rotation speed, bus voltage and counter EMF. The larger the proportional and integral coefficients, the quicker the flux will respond. If set too high it can cause instability while the motor works in flux weakening.

Parameter	**F3.40** Synchronous motor low speed Min. current	**Range**	0~100 %	**Default**	30 %

Set the synchronous motor's minimum current when the motor is at low speed. (The percentage of motor's rated current). This function is used to improve the load carrying performance at low frequency.

Parameter	**F3.41** Synchronous motor low speed switching frequency	**Range**	1.0~16.0 kHz	**Default**	2.0 kHz

This is to set the synchronous motor's switching frequency at low speed. When the motor is running at low speed, the lower switching frequency will help to reduce the motor rotation pulsation, but it will come with some noise from changing switching frequency. When this parameter setting is higher than preset switching frequency (F0.15), this parameter will become invalid.

Parameter	**F3.42** Synchronous motor Min excitation current	**Range**	-100~100.0 %	**Default**	0.0 %

Set the Min. excitation current of synchronous motor.

Parameter	② **F3.43** V/F Start switching Frequency	**Range**	0~550.00 Hz	**Default**	0

When the operating frequency is lower than F3.43, the converter runs constant current VF, and the current value is subject to F3.40. When the running frequency is higher than F3.43, the converter runs vector. This parameter is only available for NE200, but not for NE300.

Parameter	**F3.44** Synchronous motor position evaluating low speed filter	**Range**	2~100	**Default**	40
	F3.45 Synchronous motor position evaluating high speed filter		2~100		15

The above 2 parameters are to set the motor's position evaluating filtering coefficient. Normally take the default value.

Parameter	③ **F3.46** Encoder type	**Range**	0~3	**Default**	0

Value	Text
0	encoderless
1	ABZ incremental encoder
2	UVW incremental encoder
3	Rotating transformer

Parameter	③ **F3.47** Number of rotating transformer poles	**Range**	2~80	**Default**	2
	③ **F3.48** Redundancy number of rotating transformer fault detection		0~500		200
	③ **F3.51** Initial Angle of synchronous motor		0.0~359.9°		0.0°
	③ **F3.52** Z-axis pulse Angle of synchronous motor		0.0~359.9°		0.0°
	③ **F3.53** Encoder mechanical Angle		0.0~359.9°		0.0°

Parameter	③ **F3.54** ABZ encoder power-on first running position detection	**Range**	0~1	**Default**	1

Value	Text
0	Do not detect
1	Detect

Parameter	③ **F3.55** Self-learning encoder detection	Range	0~1	Default	1

Units:
0: The number of AB phase pulses is not detected
1: Detect the number of AB phase pulses
Tens:
0: Encoder direction is not detected
1: Detecting encoder direction

Parameter	③ **F3.56** Calibration Z position	Range	0~1	Default	1

0: The Z signal does not calibrate the position
1: Z signal calibration position

Parameter	③ **F3.57** Disconnection fault detection	Range	0~1	Default	111

Units:
0: Z signal break is not detected
1: Detection when Z signal breaks
Tens:
0: AB phase break is not detected
1: AB phase break detection
Hundreds:
0: Encoder reverse function failure is not detected
1: Detection when the encoder reverse function fails

Parameter	③ **F3.58** Stall detection	Range	0.00~100.00 Hz	Default	10.00 Hz

Parameter	③ **F3.59** Stall detection time	Range	0.0~100.0 s	Default	0.0 s

NOTE

0.0 indicates no stall detection

Parameter	③ **F3.60** Current angle of motor	Range	0.0~359.9°	Default	0.0°
	③ **F3.61** UVW state of UVW encoder (reserved)		0~7		1

Parameter	③ **F3.62** Encoder and motor operating status	Range	0~1	Default	0

0: Encoder and motor in the same direction
1: Encoder and motor in reverse direction

Parameter	③ **F3.63** Z signal counting status	Range	0~0xFFFF	Default	0
	③ **F3.64** ABZ encoder position calibration count		0~0xFFFF		0

Parameter	③ **F3.65** Torque current set selection	Range	0~4	Default	0

0: Speed loop output
1: CAN communication (reserved)
2: AI1
3: AI2
4: 485 communication

NOTE

1:If it is an analog quantity (AI1, AI2), the minimum and maximum values corresponding to the analog quantity need to be set to -150.0% and 150.0%, respectively.
2. When 485 communication is set, -2000~2000 corresponds to -200.0~200.0%

Parameter	③ **F3.66** Motor turns	**Range**	-32767~32767	**Default**	0
	③ **F3.67** Current position of motor		- Encoder pulse number *4~ encoder pulse number *4		0

Parameter	③ **F3.68** The acceleration and deceleration time of the given torque current When F3.65 is non-0	**Range**	0.00~50.00 s	**Default**	0

NOTE When the master/slave is synchronized, the slave should be set to 0s

Parameter	③ **F3.69** The speed positive limiting selection When F3.65 is not 0	**Range**	0~5	**Default**	0

0: Digital setting (F3.70)
1: AI1
2: AI2
3: Pulse input
4: 485 Communication Settings
5: Keyboard potentiometer

Parameter	③ **F3.70** Digital positive limiting Setting	**Range**	0~550.0 Hz	**Default**	50.00 Hz

Parameter	③ **F3.71** The speed reverse limiting selection when F3.65 is not 0	**Range**	0~5	**Default**	0

0: Digital setting (F3.72)
1: AI1
2: AI2
3: Pulse input
4: 485 Communication Setting
5: Keyboard potentiometer

Parameter	③ **F3.72** Digital reverse limiting Setting	**Range**	0~550.0 Hz	**Default**	0.00 Hz

6.5 V/F Control Parameters (F4)

Code	Description	Setting range	Default	Modify	Modbus Address
F4.00	V/F curve setting	0: Constant torque load V/F 1: 2.0 power decreasing torque 2: 1.5 power decreasing torque 3: 1.2 power decreasing torque 4: Multiple points V/F	0: Constant torque load V/F	x	0500H
F4.01	V/F freq. F1	0.0~F4.03	10.00 Hz	x	0501H
F4.02	V/F voltage V1	0.0~100.0 %	20.0 %	x	0502H
F4.03	V/F freq. F2	F4.01~F4.05	25.00 Hz	x	0503H
F4.04	V/F voltage V2	0.0~100.0 %	50.0 %	x	0504H
F4.05	V/F freq. F3	F4.03~F0.10	40.00 Hz	x	0505H
F4.06	V/F voltage V3	0.0~100.0 %	80.0 %	x	0506H
F4.07	Torque boost	0.0 %: Auto boost 000.0~030.0 %: Manual boost	0.0 %	o	0507H
F4.08	Manual torque boost cutoff point	0.00~60.00 Hz	50.00 Hz	o	0508H
F4.09	Slip compensation coefficient	0.0~200.0 %	0.0 %	o	0509H
F4.10	Slip compensation filtering time	0.01~2.55 s	0.20 s	o	050AH
F4.11	V/F separation control voltage source	0: Disabled 1: Digital setting (F4.12) 2: AI1 3: AI2 4: Pulse 5: Communication	0: Disabled	x	050BH
F4.12	V/F separation voltage digital setting	0 V~max output voltage	380 V	o	050CH
F4.13	V/F separation voltage rising time	0.0 s~1000.0 s	0.0 s	o	050DH
F4.14	V/F oscillation suppression	0~500	Depends on model	o	050EH
F4.15	Vibration suppressor	0~10	2	o	050FH
F4.17	③ V/F Oscillation suppression mode	0: Mode 1 1: Mode 2	1: Mode 2	o	0511H
F4.18	Motor 2 V/F curve setting	0: Constant torque characteristic curve 1: Torque reduction characteristic curve1(2.0) 2: Torque reduction characteristic curve1(1.5) 3: Torque reduction characteristic curve1(1.2) 4: User setting V/F curve	0: Constant torque characteristic curve	x	0512H
F4.19	③ F4.19 Motor 2 V/F frequency value F1	0.0~F4.03	10.00 Hz	x	0513H
F4.20	Motor 2 V/F voltage value V1	0.0~100.0 %	20.0 %	x	0514H
F4.21	Motor 2 V/F frequency value F2	F4.01~F4.05	25.00 Hz	x	0515H
F4.22	Motor 2 V/F voltage value V2	0.0~100.0 %	50.0 %	x	0516H
F4.23	Motor 2 V/F frequency value F3	F4.03~F0.10	40.00 Hz	x	0517H
F4.24	Motor 2 V/F voltage value V3	0.0~100.0 %	80.0 %	x	0518H
F4.25	Motor 2 torque boost	0.0%: Automatic torque boost 0.1~30.0%: Manual torque boost	0.0 %	o	0519H
F4.26	Motor 2 Manual torque lift cut-off point	0.00~60.00 Hz	50.00 Hz	o	051AH
F4.27	Motor 2 slip frequency compensation	0.00~200.00 Hz	0.0 %	o	051BH
F4.28	Motor 2 slip compensation time constant	0.01~2.55 s	0.20 s	o	051CH

Parameter	**F4.00** V/F curve setting	**Range**	0~4	**Default**	0

Value	Text	Description
0	Constant torque load V/F	Linear V/F. It is suitable for common constant torque load.
1	2.0 power decreasing torque	Multi-power decreasing torque. It is suitable for the centrifugal loads such as fan and pump, as shown Figure 6-9.
2	1.5 power decreasing torque	
3	1.2 power decreasing torque	
4	Multiple points V/F	Multiple-points V/F. It can be defined by setting F4.01~F4.06 parameters. as shown Figure 6-10.

Figure 6-9 Torque-reducing curve

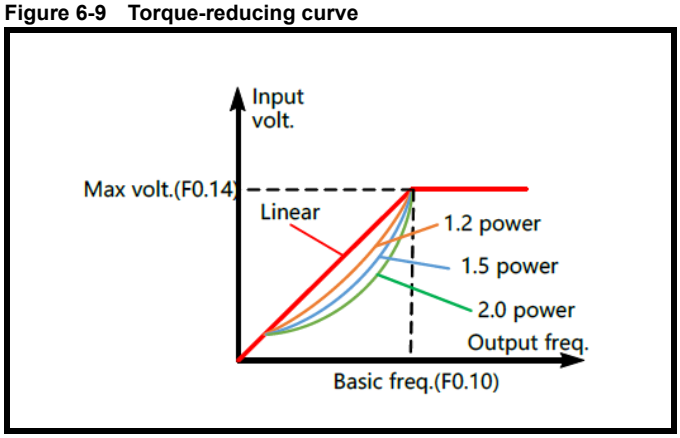

Figure 6-10 Multi-points V/F curve

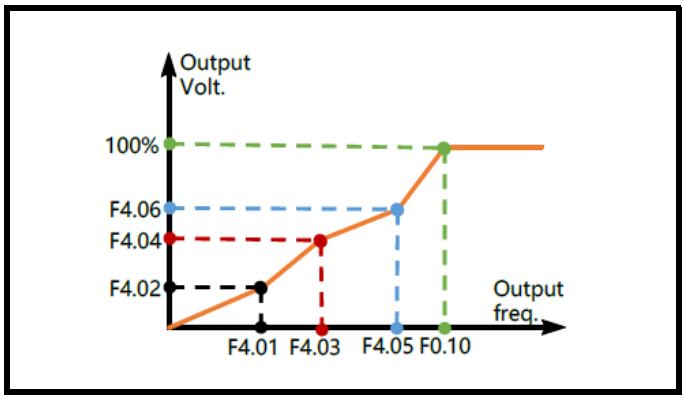

Parameter	**F4.01** V/F freq. F1	**Range**	0.0~F4.03	**Default**	10.00 Hz
	F4.02 V/F voltage V1		0~100.0 %		20.0 %
	F4.03 V/F freq. F2		F4.01~F4.05		25.00 Hz
	F4.04 V/F voltage V2		0~100.0 %		50.0 %
	F4.05 V/F freq. F3		F4.03~F0.10		40.00 Hz
	F4.06 V/F voltage V3		0~100.0 %		80.0 %

Six parameters of F4.01 to F4.06 define multi segments V/F curve, shown as Figure . The V/F curve is generally set in accordance with the load characteristics of the motor.

Parameter	**F4.07** Torque boost	**Range**	0.0 %: Auto boost 0.0~030.0 %: Manual boost	**Default**	0.0 %
	F4.08 Manual torque boost cutoff point		0.00~60.00 Hz		50.00 Hz

To compensate the low frequency torque characteristics of V/F control, it can boost the output voltage when the drive is running at low frequency. When the torque boost is set to 0.0, the drive will adopt auto torque boost. Torque boost cutoff point frequency: Under this frequency, the torque boost is valid. If it exceeds this frequency point, the torque boost is inactive. Refer to Figure 6-11 for details.

Figure 6-11 Schematic Diagram for torque boost

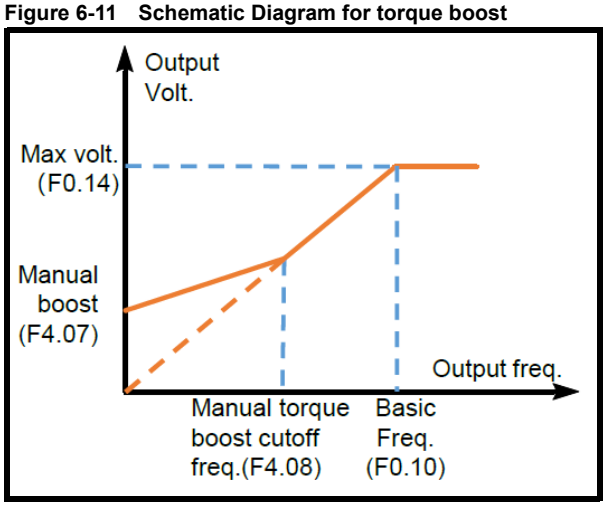

NOTE

If the torque boost is set to be too large, the motor may be over heat, and the drive might get over-current fault.

When the drive drives synchronous motor, manual torque boost function is recommended to be used and V/F curve should be adjusted according to the motor parameters.

Parameter	**F4.09** Slip compensation coefficient	Range	0.0~200.0 %	Default	0.0 %
	F4.10 Slip compensation filtering time		0.01~2.55 s		0.20 s

Setting the parameters can compensate the motor rotation slip due to change of load torque in the V/F control. With this compensation, the drive regulates the output frequency according to the change of load torque and thus increases the motor mechanical performance.

Figure 6-12 Auto slip compensation

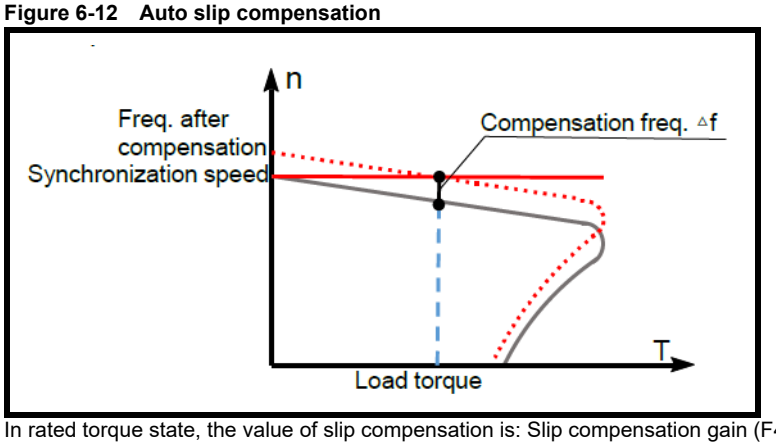

In rated torque state, the value of slip compensation is: Slip compensation gain (F4.09) x Rated slip (Synchronous speed- Rated speed)
Motoring state: Increase the gain of slip compensation (F4.09) gradually when the actual speed is lower than the reference speed.
Generating state: Increase the gain of slip compensation (F4.09) gradually when the actual speed is higher than the reference speed.

NOTE

The value of automatic slip compensation is related to the motors rated slip; therefore, the motor rated speed (F5.04) must be set correctly.
Slip compensation is disabled when Slip compensation coefficient is set to “0”.

Parameter	**F4.11** V/F separation control voltage source	Range	0~5	Default	0

Value	Text	Description
0	Disabled	V/F separation control is disabled. The drive adopts common V/F control.
1	Digital setting (F4.12)	The output voltage and frequency are controlled separately. The drive outputs frequency according to the frequency setup and runs according to Acc./Dec time. But the voltage is regulated independently by the voltage reference source defined in this parameter and Acc./Dec according to F4.13 (V/F separation voltage rising time).
2	AI1	
3	AI2	
4	Pulse	
5	Communication	

NOTE

Analog and pulse input maximum physical quantity is corresponding to maximum output voltage (F0.14).

Parameter	**F4.12** V/F separation voltage digital setting	Range	0~maximum output voltage	Default	380 V

This parameter is used to set the value of the output voltage when voltage source is digital setting in V/F separation control.

Parameter	**F4.13** V/F separation voltage rising time	Range	0.0 s~1000.0 s	Default	0.0 s

This parameter is used to set the value of the output Voltage acceleration time when the voltage is controlled independently. The acceleration time is the time that the voltage accelerates from 0 to maximum voltage.

Parameter	**F4.14** V/F oscillation suppression	Range	0.0 s~500.0 s	Default	Depends on model

When this parameter is set to be 0, the V/F oscillation suppression is invalid.

The larger this value, the stronger the suppression effect. Normally setting value of 100~300 will take suppression effect.

Parameter	**F4.15** Vibration suppressor	Range	0~10	Default	2

Parameter	③ **F4.17** V/F Oscillation suppression mode	**Range**	0~1	**Default**	1

Value	**Text**	**Description**
0	Mode 0	The oscillation suppression parameters are F4.14 and F4.15 When the oscillation suppression coefficient (F4.14) is set to 0, the oscillation suppression is ineffective, and the larger the parameter, the stronger the oscillation suppression effect of the motor, too large may cause oscillation. Under normal circumstances, the low-power machine is set at about 300 and the high-power machine is set at 100~200.
1	Mode 1	The oscillation suppression parameter is F4.14 When the oscillation suppression coefficient (F4.14) is set to 0, the oscillation suppression is ineffective, and the larger the parameter, the stronger the oscillation suppression effect of the motor, too large may cause oscillation. Under normal circumstances, it can be set at about 20, and the setting range is generally 10-30.

Parameter	③ **F4.18** Motor 2 V/F curve setting	**Range**	0~4	**Default**	0

0: Constant torque characteristic curve
1: Torque reduction characteristic curve1(2.0)
2: Torque reduction characteristic curve1(1.5)
3: Torque reduction characteristic curve1(1.2)
4: User setting V/F curve

Parameter	**F4.19** Motor 2 V/F frequency value F1	**Range**	0.0~F4.03	**Default**	10.00 Hz
	F4.20 Motor 2 V/F voltage value V1		0.0~100.0 %		20.0 %
	F4.21 Motor 2 V/F frequency value F2		F4.01~F4.05		25.00 Hz
	F4.22 Motor 2 V/F voltage value V2		0.0~100.0 %		50.0 %
	F4.23 Motor 2 V/F frequency value F3		F4.03~F0.10		40.00 Hz
	F4.24 Motor 2 V/F voltage value V3		0~100.0 %		80.0 %

Parameter	**F4.25** Motor 2 torque boost	**Range**	0.0 %~30.0 %	**Default**	0.0 %

0.0 %: Automatic torque boost
0.1~30.0 %: Manual torque boost

Parameter	**F4.26** Motor 2 Manual torque lift cut-off point	**Range**	0.00~60.00 Hz	**Default**	50.00 Hz
	F4.27 Motor 2 slip frequency compensation		0.0~200.0 %		0.0 %
	F4.28 Motor 2 slip compensation time constant		0.01~2.55 s		0.20 s

6.6 Motor parameters group (F5)

Code	Description	Setting range	Default	Modify	Modbus Address
F5.00	Motor type	0: Common asynchronous motor 1: Variable frequency asynchronous motor 2: PM motor 3: PM auxiliary reluctance motor	0: Common asynchronous motor	x	0600H
F5.01	Motor polarity number	2~56	4	x	0601H
F5.02	Rated power	② 0.1~6553.5 kW ③ 0.4~999.9 kW	Depends on model	o	0602H
F5.03	Rated current	② 0.01~655.35 A ③ 0.1~999.9 A	Depends on model	o	0603H
F5.04	Rated speed	② 0~65535 rpm * ③ 0~24000 rpm *	Depends on model	o	0604H
F5.05	No-load current I0	② 0.01~655.35 A ③ 0.1~999.9A	Depends on model	o	0605H
F5.06	Stator resistance R1	② 1~65535 mΩ * ③ 1~65535 mΩ (Drive rated power ≤22 kW) * ③ 0.1~6553.5 mΩ (Drive rated power >22 kW)	Depends on model	o	0606H
F5.07	Leakage inductive reactance X	② 0.01~655.35 mH ③ 0.01~655.35 mH (Drive rated power ≤22 kW) ③ 0.001~65.535 mH (Drive rated power >22 kW)	Depends on model	o	0607H
F5.08	Rotor resistance R2	② 1~65535 mΩ * ③ 1~65535 mΩ (Drive rated power ≤22 kW) * ③ 0.1~6553.5 mΩ (Drive rated power >22 kW)	Depends on model	o	0608H
F5.09	Mutual Inductive reactance Xm	② 1~65535 mΩ * ③ 1~65535 mΩ (Drive rated power ≤22 kW) * ③ 0.1~6553.5 mΩ (Drive rated power >22 kW)	Depends on model	o	0609H
F5.10	Auto tune	0: No operation 1: Static tuning 2: Rotary tuning	0: No operation	x	060AH
F5.11	Synchronous motor stator resistor Rs	② 1~65535 mΩ * ③ 1~65535 mΩ (Drive rated power ≤22 kW) ③ 0.1~6553.5 mΩ (Drive rated power >22 kW)	Depends on model	o	060BH
F5.12	Synchronous motor D-axis inductance Ld	② 0.01~655.35 mH ③ 0.01~655.35 mH (Drive rated power ≤22 kW) ③ 0.001~65.535 mH (Drive rated power >22 kW)	Depends on model	o	060CH
F5.13	Synchronous motor Q-axis inductance Lq	② 0.01~655.35 mH ③ 0.01~655.35 mH (Drive rated power ≤22 kW) ③ 0.001~65.535 mH (Drive rated power >22 kW)	Depends on model	o	060DH
F5.14	Synchronous motor counter EMF constant	0.1~6553.5 V	300.0 V	o	060EH
F5.15	Motor 2 type	0: Common asynchronous motor 1: Variable frequency asynchronous motor 2: PM motor 3: PM auxiliary reluctance motor	0: Common asynchronous motor	x	060FH
F5.16	Motor 2 polarity number	2~80	4	x	0610H
F5.17	Motor 2 rated power	0.4~999.9 kW	Model dependant	o	0611H
F5.18	Motor 2 rated frequency	0.00~550.0 Hz	50.00 Hz	x	0612H
F5.19	Motor 2 rated voltage	0~440 V	380 V	x	0613H
F5.20	Motor 2 rated current	0.1~999.9 A	Model dependant	o	0614H
F5.21	Motor 2 rated speed	0~24000 rpm	Model dependant	o	0615H
F5.22	No-load current I0	0.1~999.9 A	Model dependant	o	0616H
F5.23	Motor 2 stator resistance R1	1~65535 mΩ (Converter power ≤22 kW) 0.1~6553.5 mΩ (Converter power >22 kW)	Model dependant	o	0617H
F5.24	Motor 2 leakage reactance X	0.01~655.35mH (Converter power ≤22 kW) 0.001~65.535mH (Converter power >22 kW)	Model dependant	o	0618H
F5.25	Motor 2 rotor resistance R2	1~65535 mΩ (Converter power ≤22 kW) 0.1~6553.5 mΩ (Converter power >22 kW)	Model dependant	o	0619H
F5.26	Motor 2 mutual inductance Xm	0.01~655.35mH (Converter power ≤22 kW) 0.001~65.535mH (Converter power >22 kW)	Model dependant	o	061AH

Code	Description	Setting range	Default	Modify	Modbus Address
F5.27	Synchronous motor 2 stator resistance Rs	1~65535 mΩ (Converter power ≤22 kW) 0.1~6553.5 mΩ (Converter power >22 kW)	Model dependant	o	061BH
F5.28	Synchronous motor 2 Ld inductance	0.01~655.35mH (Converter power ≤22 kW) 0.001~65.535mH (Converter power >22 kW)	Model dependant	o	061CH
F5.29	Synchronous motor 2 Lq inductance	0.01~655.35mH (Converter power ≤22 kW) 0.001~65.535mH (Converter power >22 kW)	Model dependant	o	061DH
F5.30	Synchronous motor 2 back emf constant	0.0~6553.5 V	300.0 V	o	061EH
F5.31	Motor selection	0~1	0	o	061FH

*Display shows most significant 4 digits e.g. 12345 rpm will display 1234 rpm or 65535 mΩ will display 6553 mΩ.

Parameter	**F5.00** Motor type	**Range**	0~3	**Default**	0

0: Common asynchronous motor
1: Variable frequency asynchronous motor
2: PM motor
3: PM auxiliary reluctance motor

Parameter	**F5.01** Motor polarity number	**Range**	2~56	**Default**	4
	F5.02 Rated power		② 0.1~6553.5 kW ③ 0.4~999.9 kW		Model dependant
	F5.03 Rated current		② 0.01~655.35 A ③ 0.1~999.9 A		
	F5.04 Rated rotation speed		0~65535 rpm 0~24000		

F5.00~F5.04 are used to set the controlled motor parameters. In order to ensure the control performance, please set F5.00~F5.04 correctly by referring to values on motor nameplate.

NOTE

On V/F control, the motor power shall be matched to the drive power. Normally the motor power is only allowed to be 2 steps lower than that of the drive or 1 step higher. While in SVC or VC control, the motor power must exactly match that of the drive, otherwise, the control performance could not be ensured.

Parameter	**F5.05** No-load current I0	**Range**	② 0.01~655.35 A ③ 0.1~999.9 A	**Default**	Model dependant
	F5.06 Stator resistance R1		② 1~65535 mΩ * ③ 1~65535 mΩ (Drive rated power ≤22 kW) * ③ 0.1~6553.5 mΩ (Drive rated power >22 kW)		
	F5.07 Leakage Inductive reactance X		② 0.01~655.35 mH ③ 0.01~655.35 mH (Drive rated power ≤22 kW) ③ 0.001~65.535 mH (Drive rated power >22 kW)		
	F5.08 Rotor resistance R2		② 1~65535 mΩ * ③ 1~65535 mΩ (Drive rated power ≤22 kW) * ③ 0.1~6553.5 mΩ (Drive rated power >22 kW)		
	F5.09 Mutual Inductive reactance Xm		② 0.1~6553.5 mH ③ 0.1~6553.5 mH (Drive rated power ≤22 kW) ③ 0.01~655.35 mH (Drive rated power >22 kW)		

The above parameters are shown in the motor equivalent circuit Figure 6-13 below.

Figure 6-13 Asynchronous motor equivalent circuit

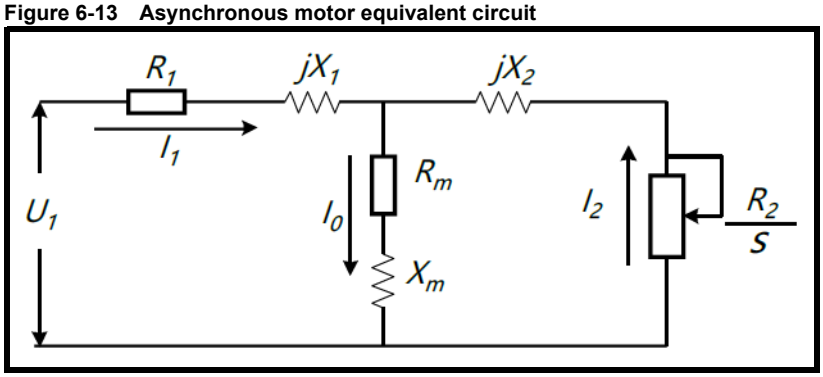

In the Figure 6-13, R_1, X_l, R_2, X_2, X_m, and I_0 represent resistance of stator, leakage inductance of stator, resistance of rotor, leakage inductance of rotor, mutual inductance and no-load current respectively. The setting of F5.07 is the sum of leakage inductance of stator and leakage inductance of rotor.
After motor rated power (F5.02) is changed, the drive will automatically change F5.03~F5.09 to adapt to the rated motor power.

Parameter	**F5.10** Auto tune	**Range**	0~2	**Default**	0

Value	Text	Description
0	No operation	
1	Static tuning	Static tuning, it is suitable to the situation as the motor is not easy to disconnect from the load. Action description: Set the function code to 1 and press RUN key for confirmation, and then the drive will conduct static tuning.
2	Rotary tuning	To ensure the dynamic control performance of the drive, please select rotary tuning. During the rotary tuning, the motor must be disconnected with the loads (i.e. no-load). Action description: Set the function code to 2 and press RUN key for confirmation, the drive will conduct static rotary first, and then accelerate to 80 % of motor rated frequency according to the acceleration time set in F0.19, holding this frequency for a while, and finally decelerate to zero speed according to deceleration time set in F0.20.

Parameter	**F5.11** Synchronous motor stator resistor Rs	**Range**	② 1~65535 mΩ ③ 1~65535 mΩ (Drive rated power ≤22 kW) ③ 0.1~6553.5 mΩ (Drive rated power >22 kW)	**Default**	Model dependant
	F5.12 Synchronous motor D-axis inductance Ld		② 0.01~655.35 mH ③ 0.01~655.35 mH (Drive rated power ≤22 kW) ③ 0.001~65.535 mH (Drive rated power >22 kW)		
	F5.13 Synchronous motor Q-axis inductance Lq		② 00.00~655.35 mH ③ 0.01~655.35 mH (Drive rated power ≤22 kW) ③ 0.001~65.535 mH (Drive rated power >22 kW)		
	F5.14 Synchronous motor counter EMF constant		0.0~6553.5 V		300.0 V

Synchronous motor stator resistance is defined as half of the resistance of any two lines among U V W.
Synchronous motor counter EMF constant is defined as voltage of any two lines among UVW when the motor is driven to rated frequency (F0.10).
F5.11~F5.14 are the main parameters that affect the drive control performance.
The values are automatically filled and saved accordingly after tuning operation until next time modification or next time parameter tuning.

NOTE

Static tuning can only acquire F5.11~F5.13 values, while dynamic tuning can acquire all 4 values for F5.11~F5.14.

Parameter	**F5.15** Motor 2 type	**Range**	0~3	**Default**	0

0: Common asynchronous motor
1: Variable frequency asynchronous motor
2: PM motor
3: PM auxiliary reluctance motor

Parameter	F5.16 Motor 2 polarity number	**Range**	2~80	**Default**	4
	F5.17 Motor 2 rated power		0.4~999.9 kW		Model dependant
	F5.18 Motor 2 rated frequency		0.00~550.0 Hz		50.00 Hz
	F5.19 Motor 2 rated voltage		0~440 V		380 V
	F5.20 Motor 2 rated current		0.1~999.9 A		Model dependant
	F5.21 Motor 2 rated speed		0~24000 rpm		Model dependant
	F5.22 No-load current I0		0.1~999.9 A		Model dependant
	F5.23 Motor 2 stator resistance R1		0.1~65535 mΩ		Model dependant

1~65535 mΩ (Converter power ≤22 kW)
0.1~6553.5 mΩ (Converter power >22kW)

Parameter	**F5.24** Motor 2 leakage reactance X	**Range**	0.001~655.35 mH	**Default**	Model dependant

0.01~655.35 mH (Converter power ≤22 kW)
0.001~65.535 mH (Converter power >22 kW)

Parameter	**F5.25** Motor 2 rotor resistance R2	**Range**	0.1~65535 mΩ	**Default**	Model dependant

1~65535 mΩ (Converter power ≤22 kW)
0.1~6553.5 mΩ (Converter power >22kW)

Parameter	**F5.26** Motor 2 mutual inductance Xm	**Range**	0.01~6553.5 mH	**Default**	Model dependant

0.1~6553.5mH (Converter power ≤22 kW)
0.01~655.35mH (Converter power >22 kW)

Parameter	**F5.27** Synchronous motor 2 stator resistance Rs	**Range**	0.1~65535 mΩ	**Default**	Model dependant

1~65535 mΩ (Converter power ≤22 kW)
0.1~6553.5 mΩ (Converter power >22kW)

Parameter	**F5.28** Synchronous motor 2 Ld inductance	**Range**	0.001~6553.5 mH	**Default**	Model dependant

0.01~655.35 mH (Converter power ≤22kW)
0.001~65.535 mH (Converter power >22kW)

Parameter	**F5.29** Synchronous motor 2 Lq inductance	**Range**	0.001~655.35 mH	**Default**	Model dependant

0.01~655.35 mH (Converter power ≤22 kW)
0.001~65.535 mH (Converter power >22 kW

Parameter	**F5.30** Synchronous motor 2 back electromotive force constant	**Range**	0.0~6553.5 V	**Default**	300.0 V
	F5.31 Motor selection		0~1		0

Value	Text
0	Motor1
1	Motor2

6.7 Input terminals group (F6)

Code	Description	Setting range	Default	Modify	Modbus Address
F6.00	Terminal Command mode	0: Two-wire mode 1 1: Two-wire mode 2 2: Three-wire mode 1 3: Three-wire mode 2	0: Two-wire mode 1	x	0700H
F6.01	X1 terminal Function selection	0: NULL, 1: FWD, 2: REV, 3: RUN, 4: F/R direction, 5: HLD self-hold 6: FWD jog run (FJOG) 7: REV jog run (RJOG), 8: RESET 9: Freq. source switching 10: Terminal UP, 11: Terminal DOWN 12: UP/DOWN setup clear 13: Coast to stop, 14: DC brake 15: Acc./Dec. prohibit 16: Drive running prohibit 17: Multi-step terminal 1 18: Multi-step terminal 2 19: Multi-step terminal 3 20: Multi-step terminal 4 21: Electric torque switch to digital setting 1 (F3.26) 22: Acc./Dec. time selector 1 23: Acc./Dec. time selector 2 24: Running pause normally open 25: Running pause normally closed 26: External fault normally open 27: External fault normally closed 28: Run command switch to terminal 29: Run command switch to keypad 30: External stop terminal; same to STOP key in keypad control mode. 31: Reserved, 32: PLC status reset 33: Wobble freq.pause 34: Wobble freq. status reset 35: PID pause 36: PID parameters switching 37: PID direction reversion; Active this terminal to reverse PID direction set by F8.04. 38: Timing drive input 39: Counter signal input 40: Counter clear 41: Actual length clear 42: FWD running (FWD NC) 43: REV running (REV NC) 44: HLD (Normally open) 45: Increase torque 46: Torque increment clear, 47: Decrease torque 48: One key recover user parameters (Valid in stop state) 49: Reserved. 50: PID channel selection 51: ③ Motor position reset (F3.66, F3.67 clear 52: Brake torque switch to digital setting 1 (F5.35) 53: Fire mode activation, 54: Switch to motor 2 55: ③ Zero servo enable signal 56: Emergency stop. 57: Pulse input 58: ③ Single phase measuring speed input 59: ③ Speed measuring input A 60: ③ Speed measuring input B 61: The torque given switches to the speed loop output	1: FWD	x	0701H
F6.02	X2 terminal Function selection		2: REV	x	0702H
F6.03	X3 terminal Function selection		8: RESET	x	0703H
F6.04	X4 terminal Function selection		17: Multi-step terminal 1	x	0704H
F6.05	X5 terminal Function selection		18: Multi-step terminal 2	x	0705H
F6.06	③ X6 terminal Function selection ② AI1 terminal function selection		0: NULL	x	0706H
F6.07	③ X7 terminal Function selection ② AI2 terminal function selection		0: NULL	x	0707H
F6.08	② Reserved ③ X8 terminal function selection		0: NULL	x	0708H
F6.09	② Reserved ③ AI1 terminal function selection		0: NULL	x	0709H

Code	Description	Setting range	Default	Modify	Modbus Address
F6.10	Analog Nonlinear Selection	0: None 1: AI1 2: AI2 3: Pulse	0: None	x	070AH
F6.11	AI1 Min. input	0.00~F6.13	0.00 V	o	070BH
F6.12	AI1 Min. input corresponding setup	-200.0~200.0 % **	0.0 %	o	070CH
F6.13	AI1 Max. input	F6.11~10.00 V	10.00 V	o	070DH
F6.14	AI1 Max. input corresponding setup	-200.0~200.0 % **	100.0 %	o	070EH
F6.15	AI1 input filter time	0.01~50.00 s	0.05 s	o	070FH
F6.16	AI2 Min. input	0.00~F6.18	0.00 V	o	0710H
F6.17	AI2 Min. input corresponding setup	-200.0~200.0 %	0.0 %	o	0711H
F6.18	AI2 Max. input	F6.16~10.00 V	10.00 V	o	0712H
F6.19	AI2 Max. input corresponding setup	-200.0~200.0 % **	100.0 %	o	0713H
F6.20	AI2 input filter time	0.01~50.00 s	0.05 s	o	0714H
F6.21	PULSE Min. input	0.00~F6.23	0.00 kHz	o	0715H
F6.22	PULSE Min. input corresponding setup	-200.0 %~200.0 % **	0.0 %	o	0716H
F6.23	PULSE Max. input	F6.21~50.00 kHz	50.00 kHz	o	0717H
F6.24	PULSE Max. input corresponding setup	-200.0 %~200.0 % **	100.0 %	o	0718H
F6.25	Pulse filter time	0.01~50.00 s	0.05 s	o	0719H
F6.26	Terminal up/down initial increment	0.00~10.00 Hz	0.01 Hz	o	071AH
F6.27	Freq. ref.2 datum	0: Max. freq. 1: Freq. ref.1	0: Max. freq.	o	071BH
F6.28	Delay duration of X1 terminal close	0.0~100.0 s	0.0 s	o	071CH
F6.29	Delay duration of X1 terminal open	0.0~100.0 s	0.0 s	o	071DH
F6.30	Delay duration of X2 terminal close	0.0~100.0 s	0.0 s	o	071EH
F6.31	Delay duration of X2 terminal open	0.0~100.0 s	0.0 s	o	071FH
F6.32	Pos. and Neg.logic terminal X 1	Pos. logic of Xi terminal: Be valid while connecting between Xi and COM. Neg. logic of Xi terminal: Be valid while disconnecting between Xi and COM. Units: Logic of X1 terminal Tens: Logic of X2 terminal Hundreds: Logic of X3 terminal Thousands: Logic of X4 terminal	0000	x	0720H
F6.33	Pos. and Neg. logic terminal X 2	Units: Logic of X5 terminal ② Tens: Logic of AI1 terminal ③ Tens: Logic of X6 terminal ② Hundreds: Logic of AI2 terminal **NOTE** Terminal 24, 25, 26, 27, 42, 43, 44 and 49 are not impacted by this parameter. ③ Hundreds: Logic of X7 terminal ③ Thousands: Logic of X8 terminal **NOTE** Terminal 24, 25, 26, 27, 42, 43, 44 and 49 are not impacted by this parameter.	0000	x	0721H
F6.34	AI2 voltage and current signal selection	0: Voltage signal 1: Current signal	0: Voltage signal	x	0722H
F6.35	Multi-function input terminal NPN/ PNP selection	0: NPN 1: PNP	0: NPN	x	0723H
F6.36	AI1 Line break detection threshold	0.00~10.00 V	0.00 V	o	0724H
F6.37	AI1 Line break detection time	0~1000 ms	50 ms	o	0725H
F6.38	AI2 Line break detection threshold	0.00~10.00 V	0.00 V	o	0726H

Code	Description	Setting range	Default	Modify	Modbus Address
F6.39	AI2 Line break detection time	0~1000 ms	50 ms	o	0727H
F6.40	AI disconnection action	Units actions after disconnection: 0: Continue to run the alarm on the given signal 1: Run according to the given value before disconnection until shutdown, alarm prompt 2: Continue to run the alarm on the given signal 3: Keep running at the lower frequency until the machine stops, and the alarm prompts 4: Press the frequency set by F0.06 to run straight until the machine stops, and the alarm prompts 5: Run according to the given value before dropping the line, the alarm prompts, and continue to run according to the given signal after the fault is eliminated 6: Run according to the upper limit frequency, the alarm prompts, and continue to run according to the given signal after the fault is eliminated 7: Run according to the lower limit frequency, the alarm prompts, and continue to run according to the given signal after the fault is eliminated 8: Run according to the frequency set by F0.06, the alarm prompts, and continue to run according to the given signal after the fault is eliminated 9: Failure shutdown Tens actions after disconnection: Same as above	0000H	o	0728H
F6.41	③ Select the terminal AI3 function	0: Analog AI3 (-10~10 V) 1: PT100 thermistor 2: PT100 thermistor 3: KTY-84 thermistor	0: Analog AI3 (-10~10 V)	o	0729H
F6.42	③ AI3 Minimum input value	0.00~F6.44	0000H	o	072AH
F6.43	③ AI3 Minimum input corresponding value	-200.0~200.0 %	0.0 %	o	072BH
F6.44	③ AI3 Maximum input value	F6.16~10.00 V	10.00 V	o	072CH
F6.45	AI3 Maximum input value	-200.0~200.0 %	100.0 %	o	072DH
F6.46	③ AI3 input filtering time constant	0.01~50.00 s	0.20 s	o	072EH

** Will display sign when negative and 3 most significant digits e.g. -199.0 will display -199. and 199.0 will display as is.

Parameter	**F6.00** Terminal Command mode	**Range**	0~3	**Default**	0

This parameter defines four different control modes that control the drive operation through external terminals.

Value	Text	Description
0	Two-wire mode 1	This mode is the most commonly used two-line mode. The forward/reverse rotation of the motor is decided by the commands of FWD and REV terminals, as shown in Figure 6-14. **Figure 6-14 Two wire mode 1** 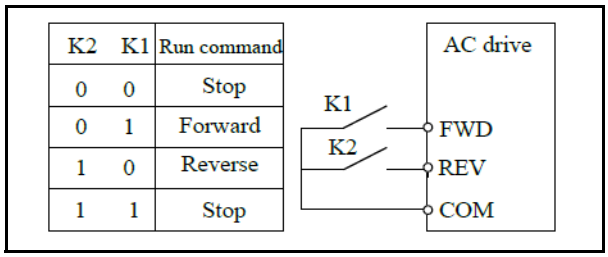
1	Two-wire mode 2	In this mode, both function RUN (Run command) and F/R (Running direction) are used: If RUN is enabled, the drive will start up. If F/R is selected but disabled, the drive will run forward. If F/R is selected and enabled, the drive will run in reverse. When F/R is not selected, the running direction is defined by function code (F0.17) Terminals wiring is show in Figure 6-15. **Figure 6-15 Two-wire mode 2** 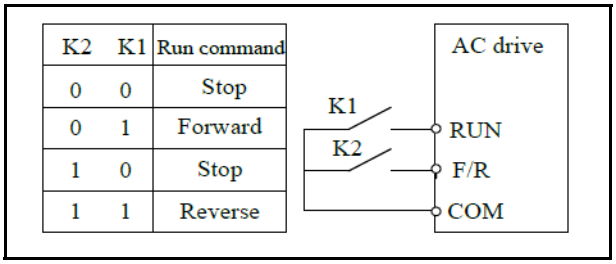
2	Three-wire mode 1	In this mode, FWD and REV terminal control the forward and reverse direction of the motor; but the pulse signal is effective. HLD is holding terminal, i.e. when HLD is ON, the pulse signal of FWD and REV is hold; when HLD is OFF, the holding of FWD and REV is removed. The drive is stopped by disconnecting the HLD terminal. As shown in Figure 6-16. **Figure 6-16 Three-wire mode 1** 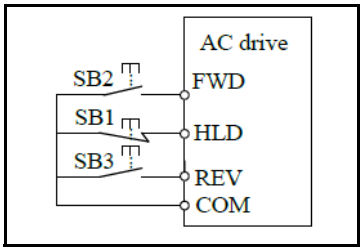
3	Three-wire mode 2	In this mode, RUN terminal control run command, while F/R decides the motor rotation direction. When HLD is ON, the RUN pulse signal is hold; when the HLD is off, the holding of RUN is removed. Stop command is conducted by disconnecting the HLD terminal. As shown in Figure 6-17. When F/R is not selected, the running direction is defined by function code (F0.17). **Figure 6-17 Three-wire mode 2** 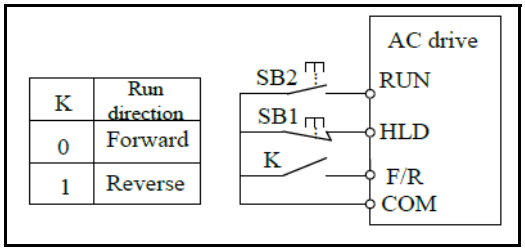

Parameter	**F6.01** X1 terminal function selection	**Range**	0~61	**Default**	1
	F6.02 X2 terminal function selection		0~61		2
	F6.03 X3 terminal function selection		0~61		8
	F6.04 X4 terminal function selection		0~61		17
	F6.05 X5 terminal function selection		0~61		18
	② **F6.06** AI1 terminal function selection ③ **F6.06** X6 terminal Function selection		0~61		0
	② **F6.07** AI2 terminal function selection ③ **F6.07** X7 terminal Function selection		0~61		0
	② **F6.08** Reserved ③ **F6.08** X8 terminal function selection		Reserved 0~61		Reserved 0
	② **F6.09** Reserved ③ **F6.09** AI1 terminal function selection		Reserved 0~61		Reserved 0

These parameters are used to set the functions of the multifunctional digital input terminals. Refer to Table 6-3 for details.

NOTE

For NE300, X6~X8 terminals are on the IO option PCB.

Table 6-3 Function list for digital input terminals

Value	Function	Description
0	NULL	This is to define invalidity of the terminal. The drive shall have no action even there is pulse input. The undefined terminals can be set into NULL to avoid mistaken action.
1	Forward (FWD)	Control the forward rotation and reverse rotation of the drive via the external terminals
2	Reverse (REV)	
3	RUN	Control the drive running via the external terminal.
4	F/R running direction	Control the direction of the drive. Inactive state: Forward; Active state: Reverse rotation.
5	HLD self-hold selection	Running signal self-hold terminal, refer to F6.00 terminal command modes setup.
6	Forward rotation Jog (FJOG)	Terminals JOG running. FJOG is prior. For details regarding frequency and Jog acceleration/ deceleration time during the Jog running, refer to F2.00, F2.01 and F2.02 function codes.
7	Reverse rotation Jog (RJOG)	
8	RESET (RST)	The terminal defined as RST can be used to do fault reset under fault status; In running status, activating this terminal will stop the drive according to preset stop mode.
9	Frequency source switching	When the frequency reference selection (F0.05) is set to 3, this terminal is used to switch Freq. reference1 and Freq. reference2. When the frequency source selection (F0.05) is set to 4, it performs switching between frequency ref. 1 and (freq. ref.1 + freq. ref.2)
10	Terminal UP	When the frequency is given by the external terminals, it is used to modify increment and decrement commands of frequency. When the frequency source is set to digital setup, it can be used to adjust up & down the setup frequency.
11	Terminal DOWN	
12	UP/DOWN setup clear	When the frequency reference is digital frequency reference, this terminal can be used to clear the frequency value modified by UP/DOWN and thus restore the reference frequency to the setup value of F0.06.
13	Coast to stop	The drive locks the output, and the motor stop process is beyond the drive control. It is the general method adopted when the load has high inertia and no requirement for the stop time.
14	DC injection braking	Once this terminal is enabled, the drive directly switches to the DC brake status. Intensity of DC brake follows DC braking current preset in F1.11.
15	Acceleration/deceleration prohibit	Protect the drive from being affected by external signals (except stop command), and maintain the current frequency.
16	Drive running prohibit	Once this terminal is enabled, if the drive is on running status, the drive will coast to stop immediately, if the drive is on stop status, the drive cannot start. This is mainly used in applications where needs safety linkage.

17	Multi-step terminal 1	It can realize 16 steps of speed through the combination of digital status of these four terminals. Refer to attached Table 6-4 for multi-speed setting details. K1~K4 correspond to terminals 17~20.
18	Multi-step terminal 2	
19	Multi-step terminal 3	
20	Multi-step terminal 4	
21	Electric torque switch to digital setting 1(F3.26)	-
22	Acc/Dec time selector 1	It can select four types of speed-up/speed-down time through the combination of digital status of these two terminals. Refer to Table 6-5 for details.
23	Acc/Dec time selector 2	
24	External pause normally open input	The drive decelerates to stop, but all the running parameters are saved in memory, such as PLC parameter, wobble frequency parameter and PID parameters. After this pause signal disappears, the drive restores to the status before stop.
25	External pause normally closed input	
26	External fault normally open	After the external fault signal is sent to the drive, the drive reports fault and stops.
27	External fault normally closed	
28	Run command switching to terminal	When Run command (F0.02) is 0 or 2, this terminal forces the run command switching to terminal control.
29	Run command switching to Keypad	When Run command (F0.02) is 1 or 2, this terminal forces the run command switching to keypad control.
30	External stop terminal; same to STOP key in keypad control mode.	This is to define an external stop terminal. In keypad control mode, this terminal can stop the drive. It is same as STOP key on keypad.
31	Reserved	Reserved
32	PLC status reset	Drive reset to the first step of PLC running.
33	Wobble freq. pause	The drive pauses at the present frequency. Once this terminal is disabled, the drive resumes the wobble frequency running.
34	Wobble freq. status reset	The drive returns to wobble center frequency.
35	PID pause	PID is inactive temporarily, and the drive maintains the current frequency output.
36	PID parameters switching	If the terminal is valid, PID control switches to second group PID parameters.
37	PID direction reversion	If this terminal is enabled, PID action direction is opposite to the direction set in F8.04.
38	Timing drive input	If the terminal is valid, drive starts the timing, otherwise zero-clear.
39	Counter signal input	The input terminal of counting pulse.
40	Counter clear	Clear the counter status.
41	③ Actual length clear	When the function terminal is enabled, actual length in fixed length control will be cleared to zero.
42	FWD running (FWD NC)	Control the drive forward or reversed by external terminals.
43	REV running (REV NC)	
44	HLD (Normally Open)	Running signal self-hold terminal, refer to F6.00 terminal command modes setup.
45	Torque increase	When the torque reference is given by discrete signal, this function realizes the torque increasing, decreasing, and increment clearing. Refer to F3.24 and F3.25 for torque increment and adjustment range.
46	Torque increase clear	
47	Torque decrease	
48	One key recover user parameter (Valid in stop state)	If the user has done the parameter backup operation before, drive can be reset to those parameters setting by this terminal under stop state.
49	Reserved	Reserved
50	PID channel selection	-
51	③ Motor position reset (F3.66, F3.67 clear)	-
52	Brake torque switch to digital setting 1(F3.35)	-
53	Fire mode activation	-
54	Switch to Motor 2	-
55	③ Zero servo enable signal	-
56	Urgency stop	When the functional terminal is set to be effective, the inverter stops at the deceleration time 4 (F2.08), and the signal pulse is effective, that is, it can be an emergency stop as long as the functional terminal is effective, and the inverter cannot start normally when the functional terminal is always closed.

57	Pulse input	High speed pulse input. This function is only valid for X4 & X5. And X4 has priority when there are 2 routes input.
58	③ Single phase measuring speed input	Single phase measuring speed input. Only valid for X4 and X5. Take X4 as priority when there are 2 routes input.
59	③ Speed measuring input A	Measuring speed input A. It is only valid for X4
60	③ Speed measuring input B	Measuring speed input B. It is only valid for X5
61	The torque given switches to the speed loop output	

Table 6-4 Multi-steps running selection guide

K4	K3	K2	K1	Freq. Setup	Parameter
OFF	OFF	OFF	OFF	F0.06	F0.06
OFF	OFF	OFF	ON	Multi-step freq.1	F9.00
OFF	OFF	ON	OFF	Multi-step freq.2	F9.01
OFF	OFF	ON	ON	Multi-step freq.3	F9.02
OFF	ON	OFF	OFF	Multi-step freq.4	F9.03
OFF	ON	OFF	ON	Multi-step freq.5	F9.04
OFF	ON	ON	OFF	Multi-step freq.6	F9.05
OFF	ON	ON	ON	Multi-step freq.7	F9.06
ON	OFF	OFF	OFF	Multi-step freq.8	F9.27
ON	OFF	OFF	ON	Multi-step freq.9	F9.28
ON	OFF	ON	OFF	Multi-step freq.10	F9.29
ON	OFF	ON	ON	Multi-step freq.11	F9.30
ON	ON	OFF	OFF	Multi-step freq.12	F9.31
ON	ON	OFF	ON	Multi-step freq.13	F9.32
ON	ON	ON	OFF	Multi-step freq.14	F9.33
ON	ON	ON	ON	Multi-step freq.15	F9.34

Table 6-5 Acc/Dec time selection table

Terminal 2	Terminal 1	Acc/Dec time selection
OFF	OFF	Acc time 1/ Dec time 1
OFF	ON	Acc time 2/ Dec time 2
ON	OFF	Acc time 3/ Dec time 3
ON	ON	Acc time 4/ Dec time 4

Parameter	**F6.10** Analog Nonlinear Selection	**Range**	0~3	**Default**	0

Value	Text	Description
0	None	F6.11~F6.15 are used to define AI1 inputs, F6.16~F6.20 are used to define AI2 inputs, and F6.21~F6.25 are used to defined pulse inputs. They are independent and do not interfere with each other.
1	AI1	All the parameters from F6.11 to F6.25 are nonlinear setting points for the AI1 channel, as shown in Figure 6-18. The AI1 filter time F6.15 is taken. And AI2 setting points F6.16~F6.20 are taken as 0.00~10.00 V input and its corresponding 0.00~100.00 %.setup value. And pulse input setting points are taken as 0.00~50.00 kHz and its corresponding 0.00~100.00 % setup value.
2	AI2	All the parameters from F6.11 to F6.25 are nonlinear setting points for the AI2 channel, as shown in Figure 6-18. The AI2 filter time F6.20 is taken. And AI1 setting points F6.16~F6.20 are taken as 0.00~10.00 V input and its corresponding 0.00~100.00 % setup value. And pulse input setting points are taken as 0.00~50.00 kHz and its corresponding 0.00~100.00 % setup value.
3	Pulse input	Pulse input All the parameters from F6.11 to F6.25 are nonlinear setting points for the PULSE input channel, as shown in Figure 6-18. The pulse filter time F6.25 is taken. And AI1 setting points F6.16~F6.20 are taken as 0.00~10.00 V input and its corresponding 0.00~100.00 % setup value. AI2 setting points F6.16~F6.20 are taken as 0.00~10.00 V input and its corresponding 0.00~100.00 % setup value.

Figure 6-18 Analog input non-linear curve

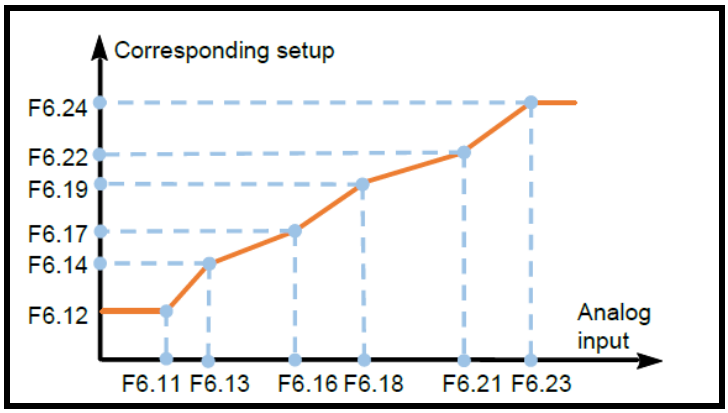

Parameter		Range		Default	
	F6.11 AI1 minimum input		0.0~F6.13		0.00 V
	F6.12 AI1 minimum Input corresponding setup		-200 %~200.0 %		0.0 %
	F6.13 AI1 Max. input		F6.11~10.00 V		10.00 V
	F6.14 AI1 Max. Input corresponding setup		-200 %~200.0 %		100.0 %
	F6.15 AI1 input filter time		0.01~50.00 s		0.05 s
	F6.16 AI2 Min. input		0.00~F6.18		0.00 V
	F6.17 AI2 Min. Input corresponding setup		-200 %~200.0 %		0.0 %
	F6.18 AI2 Max. input		F6.16~10.00 V		10.00 V
	F6.19 AI2 Max. Input corresponding setup		-200 %~200.0 %		100.0 %
	F6.20 AI2 input filter time		0.01~50.00 s		0.05 s
	F6.21 Pulse Min. input frequency		0.00~F6.23		0.00 kHz
	F6.22 Pulse Min. input frequency Corresponding setup		-200 %~200.0 %		0.0 %
	F6.23 PULSE Max. input frequency		F6.21~50.00 kHz		50.00 kHz
	F6.24 PULSE input Maximum Frequency Corresponding setup		-200 %~200.0 %		100.0 %
	F6.25 Pulse filter time		0.01~50.00s		0.05 s

The above function codes define the relationship between the analog input (AI1, AI2, Pulse input) voltage and their corresponding value. When the analog input voltage exceeds the setup maximum input or minimum input range, the excess part will be calculated as maximum input or minimum input, as shown in Figure 6-19.

Figure 6-19 Analog input linear curve

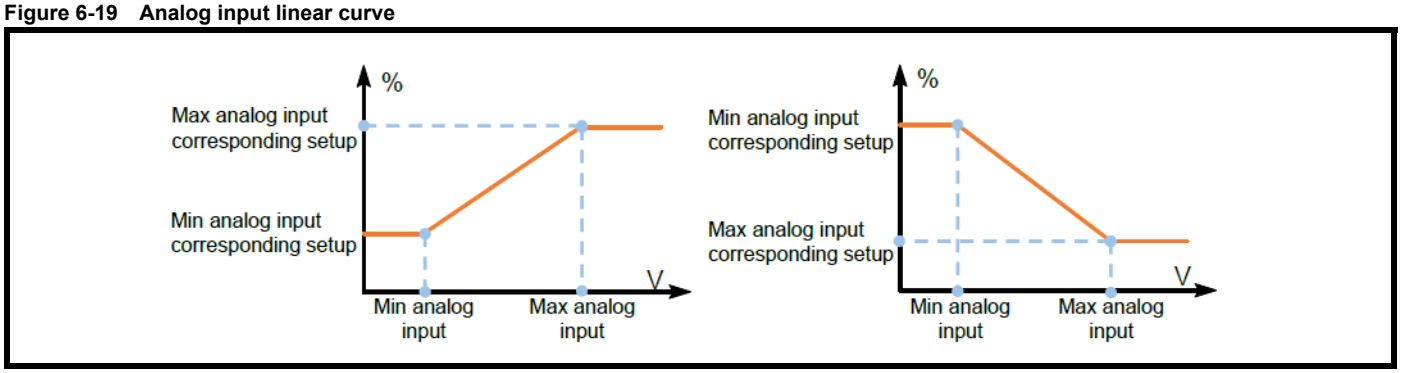

Parameter	**F6.26** Terminal up/down initial increment	Range	0.00~10.00 kHz	Default	0.01 Hz

Figure 6-20 Terminal up/down initial increment

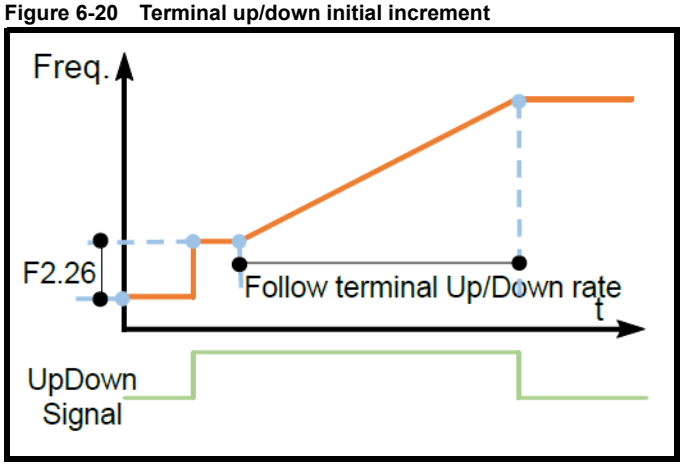

Parameter	**F6.27** Freq. ref. 2 datum	Range	0~1	Default	0

Value	Function	Description
0	Max. freq.	Maximum frequency
1	Freq. ref.1	Frequency reference 1 NOTE For NE200, select the frequency at 10 V point as datum while this function code is the analog. For NE300, select the frequency datum while this function code is the analog and pulse.

Parameter		Range		Default	
	F6.28 Delay duration of X1 terminal close		0.0~100.0 s		0
	F6.29 Delay duration of X1 terminal open		0.0~100.0 s		0
	F6.30 Delay duration of X2 terminal close		0.0~100.0 s		0
	F6.31 Delay duration of X2 terminal open		0.0~100.0 s		0
	F6.32 Pos. and Neg. logic terminal X 1		Units: Logic of X1 terminal Tens: Logic of X2 terminal Hundreds: Logic of X3 terminal Thousands: Logic of X4 terminal		0000
	F6.33 Pos. and Neg. logic terminal X 2		Units: Logic of X5 terminal ② Tens: Logic of AI1 terminal ③ Tens: Logic of X6 terminal ② Hundreds: Logic of AI2 terminal ③ Hundreds: Logic of X7 terminal ③ Thousands: Logic of X8 terminal NOTE Terminal 24, 25, 26, 27, 42, 43, 44 and 49 are not impacted by this parameter. Pos. logic of Xi terminal: Be valid while connecting between Xi and COM. Neg. logic of Xi terminal: Be valid while disconnecting between Xi and COM.		0000

Parameter	**F6.34** AI2 voltage and current signal selection	**Range**	0~1	**Default**	0

Value	Text
0	Voltage signal
1	Current signal

Parameter	**F6.35** Multi-function input terminal NPN/PNP selection	**Range**	0~1	**Default**	0

Value	Text
0	NPN
1	PNP

Parameter	**F6.36** AI1 Line break detection threshold	**Range**	0.00~10.00 V	**Default**	0.00 V

NOTE

Disconnection is not detected at 0.00 V.

Parameter	**F6.37** AI1 Line break detection time	**Range**	0~1000 ms	**Default**	50 ms
	F6.38 AI2 Line break detection threshold		0.00~10.00 V		0.00 V
	F6.39 AI2 Line break detection time		0~1000 ms		50 ms

Parameter	**F6.40** AI1 disconnection action	**Range**	0~9	**Default**	0000H

Value	Text
0	Continue to run the alarm on the given signal
1	Run according to the given value before disconnection until shutdown, alarm prompt
2	Continue to run the alarm on the given signal
3	Keep running at the lower frequency until the machine stops, and the alarm prompts
4	Press the frequency set by F0.06 to run straight until the machine stops, and the alarm prompts
5	Run according to the given value before dropping the line, the alarm prompts, and continue to run according to the given signal after the fault is eliminated
6	Run according to the upper limit frequency, the alarm prompts, and continue to run according to the given signal after the fault is eliminated
7	Run according to the lower limit frequency, the alarm prompts, and continue to run according to the given signal after the fault is eliminated
8	Run according to the frequency set by F0.06, the alarm prompts, and continue to run according to the given signal after the fault is eliminated
9	Failure shutdown Tens actions after disconnection: Same as above

Parameter	③ **F6.41** Select the terminal AI3 function	**Range**	0~3	**Default**	0

Value	Text
0	Analog AI3 (-10~10 V)
1	PT100 thermistor
2	PT100 thermistor
3	KTY-84 thermistor

Parameter	③ **F6.42** AI3 Minimum input value	**Range**	0.00~F6.44	**Default**	0000H
	③ **F6.43** AI3 Minimum input corresponding value		-200.0~200.0 %		0.0 %
	③ **F6.44** AI3 Maximum input value		F6.16~10.00 V		10.00 V
	F6.45 AI3 Maximum input value		-200.0~200.0 %		100.0 %
	③ **F6.46** AI3 input filtering time constant		0.01~50.00 s		0.20 s

6.8 Output terminals group (F7)

Code	Description	Setting range	Default	Modify	Modbus Address
F7.00	② Reserved ③ DO terminal output selection	0: NULL 1: RUN 2: Freq. arrival(FAR) 3: Freq. level detection 1 (FDT1) 4: Freq. level detection 2 (FDT2) 5: Freq. detection when speed-up 6: Freq. detection when speed-down 7: Zero-speed running 8: Zero-speed 9: PLC circulation completion 10: Reserved 11: Ready for running (RDY) 12: Timing arrival 13: Counting arrival 14: Reserved 15: Preset torque value arrival 16: Drive fault output 17: Under voltage status output 18: Drive overload pre-warning 19: Fixed-length arrived, level signal 20: PID in sleep mode 21: AI1>AI2 22: AI1<F7.16 23: AI1>F7.16 24: F7.16<AI1<F7.17 25: Frequency lower limit arrival 26: Multi-pumps system auxiliary pump control signal 27: Communication setting 28: Drive running time arrival ③ 29: Running in FWD ③ 30: Running in REV ③ 31: Instantaneous power loss processing 32: Current arrival 33: Brake signal 34: Run command channel indicator	② Reserved ③ 0	② Reserved ③ o	0800H
F7.01	Y1 terminal output selection		1: RUN	o	0801H
F7.02	② Reserved ③ Y2 terminal output selection		② Reserved ③ 0	② Reserved ③ o	0802H
F7.03	Relay 1 (TA/TB/TC) output selection		16: Drive fault output	o	0803H
F7.04	② Reserved ③ Relay 2 (BRA/BRB/BRC) output selection		② Reserved ③ 0: NULL	② Reserve ③ o	0804H
F7.05	Freq. arrival (FAR) detection width	0.00~10.00 Hz	2.50 Hz	o	0805H
F7.06	Frequency detection value 1 (FDT1 level)	0.00~600.0 Hz	5.00 Hz	o	0806H
F7.07	Freq. detection lag1 (FDT1-lag)	0.00~10.00 Hz	1.00 Hz	o	0807H
F7.08	Frequency detection value 2 (FDT2 level)	0.00~320.0 Hz	② 5.00 Hz ③ 25.00 Hz	o	0808H
F7.09	Freq. detection lag2 (FDT2-lag)	0.00~10.00 Hz	1.00 Hz	o	0809H
F7.10	Up detection frequency	00.00~550.0 Hz	50.00 Hz	o	080AH
F7.11	Down detection frequency	00.00~550.0 Hz	00.00 Hz	o	080BH
F7.12	Torque detection reference	0.0~200.0 %	100.0 %	o	080CH
F7.13	Preset Counting arrival value	0~9999	0	o	080DH
F7.14	Preset Timing arrival value	0.0~6553.0 s	0.0 s	o	080EH
F7.16	AI1 compare threshold 1	0.00~10.00 V	0.00 V	o	0810H
F7.17	AI1 compare threshold 2	0.00~10.00 V	0.00 V	o	0811H
F7.18	Analog compare hysteresis error	0.00~30.00 V	0.20 V	o	0812H

Code	Description	Setting range	Default	Modify	Modbus Address
F7.19	② AO function definition ③ AO1 output selection	0: NULL 1: Running freq. (0~max frequency) 2: Setting freq. (0~max frequency) 3: Output current(0~2 times of drive rated current) 4: Output voltage (0~Max Voltage) 5: PID setup (0~10 V) 6: PID feedback (0~10 V) 7: Calibrating signal (5 V) 8: Output torque (0~2 x motor rated torque) 9: Output power (0~2 x drive rated power) 10: Bus voltage (0~1000 V) 11: 9: AI1 (0~10 V) 12: AI2 (0~10V / 4~20 mA) 13: Pulse frequency 14: Communication setting 15: Speed loop output 16: Current output (0~2 x rated value)	1: Running freq. (0~max frequency)	o	0813H
F7.20	② Reserved ③ AO2 output selection		② Reserved ③ 0: NULL	② Reserve ③ o	0814H
F7.21	② Y1 function definition ③ DO output selection		0: NULL	o	0815H
F7.22	Voltage and current signal selection	0: Voltage signal 1: Current signal	0: 0-10 V / 0~20 mA	o	0816H
F7.23	Reserved	Reserved	Reserved	Reserve	0817H
F7.24	② Gain of AO ③ Gain of AO1	1~200 %	100 %	o	0818H
F7.25	② Reserved ③ Gain of AO2	② Reserved ③ 1~200 %	② Reserved ③ 100 %	② Reserve ③ o	0819H
F7.26	② Y1 Max. output pulse freq. ③ DO Max. output pulse freq.	② Y1 Min. output pulse freq.~50.00 kHz ③ DO Min. output pulse freq.~50.00 kHz	10.00 kHz	o	081AH
F7.27	② Y1 Min. output pulse freq. ③ DO Min. output pulse f req.	② 0.00~Y1 Max. output pulse freq. ③ 0.00~DO Max. output pulse freq.	0.00 kHz	o	081BH
F7.28	Auxiliary pump start lag time	0~9999 s	0	o	081CH
F7.29	Auxiliary pump stop lag time	0~9999 s	0	o	081DH
F7.30	② Y1 Max. output ③ DO Max. output	0: 50.00 kHz 1: 500.0 Hz	0	x	081EH
F7.31	FDT/RUN signal Jog selection	0: Include Jog signal 1: Do not include Jog signal	0: Include Jog signal	x	081FH
F7.32	Running time arrival setup	0~65530 Mins *	0	o	0820H
F7.33	Running time arrival stop selection	0: Do not stop 1: Stop	0: Do not stop	o	0821H
F7.34	AO1 minimum output	0.0~100.0 %	0.0 %	o	0822H
F7.35	③ AO2 minimum output	③ 0.0~100.0 %	③ 0.0 %	③ o	0823H
F7.36	Digital output terminal Pos./Neg. logic	Units: Logic of Y1 terminal ② Tens: Reserve ③ Tens: Logic of Y2 terminal Hundreds: Logic of Relay 1 ② Thousands: Reserve ③ Thousands: Logic of Relay 2	0000	o	0824H
F7.37	Current reaches the upper limit	0.0~655.35 A	0.0 A	o	0825H
F7.38	Current upper limit check time	0.00~50.00 s	0.00 s	o	0826H
F7.39	Current reaches lower limit	0.0~655.35 A	0.0 A	o	0827H
F7.40	Current lower limit check time	0.00~50.00 s	0.00 s	o	0828H
F7.41	AO torque output range selection	0: 0~200 % the rated torque of motor 1: -200~200 % Motor rated torque output	0: 0~200 % the rated torque of motor	o	0829H
F7.42	Brake Release Frequency	0.00~50.00 Hz	2.00 Hz	o	082AH
F7.43	Brake Release Current Threshold	0.0~100.0 %	20.0 %	o	082BH
F7.44	Current detection time	0.00~5.00 s	0.0 s	o	082CH
F7.45	Brake Release time	0.00~10.00 s	1.00 s	o	082DH
F7.46	Current limiting while brake is released	0.00~200.0 %	120.0 %	o	082EH
F7.47	Brake Apply Frequency	0.00~10.00 Hz	2.00 Hz	o	082FH
F7.48	Brake Apply Delay	0.00~10.00 s	0.00 s	o	0830H
F7.49	Brake Apply time	0.00~10.00 s	1.00 s	o	0831H

*Display shows most significant 4 digits e.g. 65530 will display 6553.

Parameter	② **F7.00** Reserved ③ **F7.00** DO terminal output definition	**Range**	Reserved 0~34	**Default**	Reserved 0
	F7.01 Y1 terminal output selection		0~34		1
	② **F7.02** Reserved ③ **F7.02** Y2 terminal output selection		Reserved 0~34		Reserved 0
	F7.03 Relay 1 (TA/TB/TC) output selection		0~34		16
	② **F7.0**4 Reserved ③ **F7.04** Relay 2 (BRA/BRB/BRC) output selection		0~34		0

Multi-functional output terminal function selection details are shown in Table 6-6.

Table 6-6 Multifunction output terminals selection

Value	Function	Description
0	NULL	The output terminal does not have any function.
1	Run	It indicates the drive is running, and there is output frequency (can be zero), terminal outputs ON signal
2	Freq. arrival (FAR)	Please refer to F7.05 for details.
3	Freq. level detection 1 (FDT1)	Please refer to F7.06 and F7.07 for details.
4	Freq. level detection 2 (FDT2)	Please refer to F7.08 and F7.09 for details.
5	Freq. detection when speed-up	When the output frequency increases to the Up detection frequency (F7.10), terminal outputs ON signal.
6	Freq. detection when speed-down	When the output frequency decreases to Down detection frequency (F7.11), terminal outputs ON signal.
7	Zero-speed running	When the drive output frequency is zero and is still in running, the terminal outputs ON signal.
8	Zero-speed	When output frequency is zero, terminal outputs ON signal.
9	PLC circulation completion	When the simple PLC running completes one cycle, the terminal outputs ON signal.
10	② Reserved ③ Indicate the running step (Co-setting in DO\Y1\Y2)	② Reserved ③ It indicates the present running step. Refer to Table 6-7 for details.
11	Ready for running (RDY)	When the main circuit and control circuit is power up and there is no fault protection action, the drive is ready for running and then terminal output ON signal.
12	Timing arrival	When multi-function input terminal defined as No.38 is active, the drive starts timing. And when the running time exceeds the F7.14 preset time, it output ON signal. The timing is cleared to zero if the input terminal is invalid.
13	Counting arrival	When the counting value reach the value defined in F7.13, it output ON signal.
14	Reserved	Reserved
15	Preset torque value arrival	When motor's torque exceeds reference value (set by F7.12), terminal outputs ON signal.
16	Drive fault output	When the drive is faulty, it outputs ON signal.
17	Under voltage status output	When the drive is in under voltage status, terminal outputs ON signal.
18	Drive overload pre-warning	If the output current is higher than the value defined by FC.02 (Overload Pre-alarm detection level), terminal outputs ON signal.
19	Fixed-length arrived, output a high level	If the actual length exceeds the preset length, terminal outputs ON signal.
20	PID in sleep mode	When PID is in sleep mode, terminal outputs ON signal.
21	AI1>AI2	When AI1>AI2 value, terminal outputs ON signal.
22	AI1<F7.16	When AI1<F7.16, terminal outputs ON signal.
23	AI1>F7.16	When AI1>F7.16, terminal outputs ON signal.
24	F7.16<AI1<F7.17	When F7.16<AI1<F7.17, terminal outputs ON signal.
25	Frequency lower limit arrival	When the running frequency reaches frequency lower limit, terminal outputs ON signal.
26	Multi-pumps system auxiliary pump control signal	Auxiliary pump control signal for constant pressure water supply, refer to the parameter F7.28 & F7.29 instruction for details.
27	Communication setting	This can define the terminal status, see the communication appendix for details.
28	Drive running time arrival	Output signal while the drive running time ≥F7.32.
29	Running in FWD	The frequency converter is in the running state and the running direction is positive, and the terminal output is valid.
30	Running in REV	The inverter is in the running state and the running direction is reversed, and the terminal output is valid.
31	Instantaneous power loss processing	Terminal output is valid when F2.21 is not zero and the frequency converter automatically drops or stops due to power failure.
32	Current arrival	Please refer to feature code F7.37 ~ F7.40 for details on current arrival.
33	Brake control	Please refer to function code F7.42 ~ F7.49 for details.
34	Run command channel indicator	When the run command is terminal control, function 34 is valid, otherwise invalid.

Table 6-7 PLC Running Steps

Y2	Y1	D0	Running Step
OFF	OFF	ON	T1
OFF	ON	OFF	T2
OFF	ON	ON	T3
ON	OFF	OFF	T4
ON	OFF	ON	T5
ON	ON	OFF	T6
ON	ON	ON	T7

Parameter	**F7.05** Freq. arrival (FAR) detection **width**	**Range**	0.00~10.00 Hz	**Default**	2.50 Hz

If the drive's output frequency is within the detection width of frequency, a pulse signal will be output, as shown in Figure 6-21.

Figure 6-21 FAR detection diagram

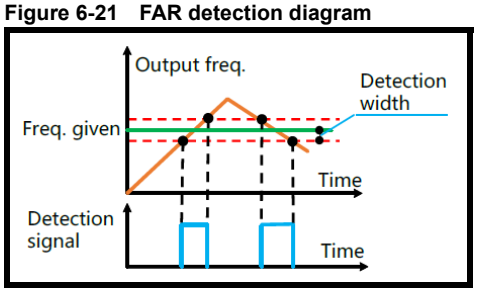

Parameter	**F7.06** Frequency detection value 1 (FDT1 level)	**Range**	0.00~600.0 Hz	**Default**	5.00 Hz
	F7.07 Frequency detection lag 1 (FDT1-lag)		0.00~10.0 Hz		1.00 Hz
	F7.08 Frequency detection value 2 (FDT2 level)		0.00~300.0 Hz		② 5.00 Hz ③ 25.00 Hz
	F7.09 Frequency detection lag 2 (FDT2-lag)		0.00~10.0 Hz		1.00 Hz

The setting of 2 frequency arrival detection values and the action relief lag value are shown as Figure 6-22 below.

Figure 6-22 FDT level and lag diagram

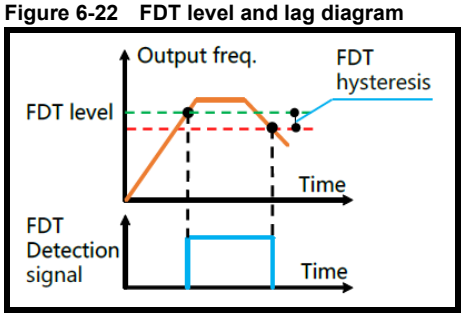

Parameter	**7.10** Up detection frequency	**Range**	0.00~550.0 Hz	**Default**	50.00 Hz
	7.11 Down detection frequency		0.00~550.0 Hz		0.00 Hz

These two parameters define the detection trigger frequency value for increasing stage and decreasing stage respectively.

Parameter	**7.12** Torque detection reference	**Range**	0.0~200.0 %	**Default**	100.0 %
	7.13 Preset Count value		0~9999		0
	7.14 Preset Timing value		0.0~6553.0 s		0.0 s

The above parameters define the detection trigger value for torque arrival detection, counting arrival detection, and timing arrival detection.

Parameter	**F7.16** AI1 compare threshold 1	**Range**	0.00~10.00 V	**Default**	0.00 V
	F7.17 AI1 compare threshold 2		0.00~10.00 V		0.00 V
	F7.18 Analog compare hysteresis error		0.00~30.00 V		0.20 V

These parameters define the value of the analog comparison. Please refer to Table 6-6 (value 22-24) for details.

Parameter	**F7.19** ② AO function definition ③ AO1 function definition	**Range**	0~16	**Default**	1
	F7.20 ② Reserved ③ AO2 output selection		0~16		0
	F7.21 ② Y1 function definition ③ DO output selection		0~16		0

For NE200, AO analog output is 0-10 V or 0-20 mA, customer can exchange between them by switch on board. See Figure 6-9.
For NE300, AO1 can output either 0~10 V or 0/4~20 mA, which can be selected by the jumper on the control board. These output selection details are shown as Table 6-8:

Table 6-8 Analog output terminals selection

Value	Function	Description
0	NULL	NULL
1	Running frequency	0~maximun frequency
2	Setting frequency	0~maximun frequency
3	Output current	0~2* drive rated current
4	Output voltage	0~Maximum Voltage
5	PID setup	0~10 V
6	PID feedback	0~10 V
7	Calibration signals	5 V
8	Output torque	0~2*motor rated torque
9	Output power	0~2*drive rated power
10	DC Bus voltage	0~1000 V
11	AI1	0~10 V
12	AI2	0~10 V
13	Pulse input	0.1~50.0 kHz
14	Communication setup	See Communication appendix
15	Speed loop output	---
16	Output current	0~2 x rated current

Parameter	**F7.22** Voltage and current signal selection	**Range**	0~1	**Default**	0

0	Voltage signal
1	Current signal

Parameter	**F7.23** Reserved	**Range**	Reserved	**Default**	-
	F7.24 ② Gain of AO ③ Gain of AO1		1~200 %		100 %
	F7.25 ② Reserved ③ Gain of AO2		--- 1~200 %		--- 100 %

The drive output and user's instrument systems are likely to produce error; you can adjust the output gain (AO1) for the meter calibration and the change of measuring range.

Parameter	**F7.26** ② Y1 Maximum output pulse freq. ③ DO Max. output pulse freq.	**Range**	Y1 Minimum output pulse freq.~50.00 kHz DO Minimum output pulse freq.~50 Hz	**Default**	10.00 kHz
	F7.27 ② Y1 Minimum output pulse freq. ③ DO Min. output pulse freq.		0.00~Y1 Maximum output pulse frequency 0.00~DO Max. output pulse freq.		0.00 kHz

The above parameters define output pulse frequency range.

Parameter	**F7.28** Auxiliary pump start lag time	**Range**	0~9999	**Default**	0 s
	F7.29 Auxiliary pump stop lag time		0~9999		0 s

The above parameters define the delay time for auxiliary pump start and stop. Refer to Figure 6-23 for details.

Figure 6-23 Constant pressure water supply auxiliary pump control signal

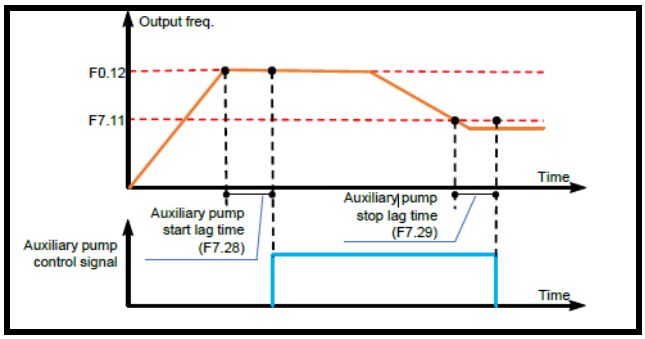

Parameter	**F7.30** ② Y1 Max. output ③ DO Max. output	**Range**	0~1	**Default**	0

0	50.00 kHz, Maximum output is 50 kHz.
1	500.0 Hz, Maximum output is 500 Hz

Parameter	**F7.31** FDT/RUN signal Jog selection	**Range**	0~1	**Default**	0

0	Include jog signal
1	Do not include jog signal

Parameter	**F7.32** Running time arrival setup	**Range**	0~65530 min	**Default**	0

When the drive starts running, the counter starts. Once the count reaches the value preset in this parameter F7.32, the drive stops and the internal counter is held. A Run command rising edge will cause the counter to reset.

Parameter	**F7.33** Running time arrival stop selection	**Range**	0~1	**Default**	0

0	Do not stop
1	Stop

When the internal counter value ≥F7.32, the drive can be set to stop or not.

NOTE

When F7.32=0, this function in invalid.

Parameter	**F7.34** AO1 minimum output	**Range**	0.0~100 %	**Default**	0.0 %

Parameter	**F7.35** ③ AO2 minimum output	**Range**	0.0~100 %	**Default**	0.0 %

Parameter	**F7.36** Digital output terminal Pos./Neg. logic	**Range**	0000~1111 Units: Logic of Y1 terminal ② Tens: Reserved ③ Tens: Logic of Y2 terminal Hundreds: Logic of Relay 1 ② Thousands: Reserved ③ Thousands: Logic of Relay 2	**Default**	0000

Parameter	**F7.37** Current reaches the upper limit	**Range**	0.0~655.35 A	**Default**	0
	F7.38 Current upper limit check time		0.00~50.00		0
	F7.39 Current reaches lower limit		0.0~655.35 A		0
	F7.40 Current lower limit check time		0.00~50.00		0

When the output terminal selects function No. 32 (current arrival), the terminal action is determined by F7.37~F7.40:
In the running state, when the output current of the converter reaches the upper limit F7.37 and the duration exceeds F7.38, the current arrival signal is effective; when the output current of the converter is lower than the lower limit F7.39 and the duration exceeds F7.40, the current arrival signal is invalid.
The current arrival signal is invalid when machine is shutdown or the current upper limit F7.37 is set to 0. When the current limit F7.39 is set higher than the current upper limit F7.37, the lower limit F7.39 is set as F7.37.

Parameter	**F7.41** AO torque output range selection	**Range**	0~1	**Default**	0

0	0~200 % the motor rated torque
1	-200~200 % motor rated torque output

Parameter	**F7.42** Brake release frequency	**Range**	0.00~50.00 Hz	**Default**	2.00 Hz
	F7.43 Brake Release Current Threshold		0.0~100.0 %		20.0 %
	F7.44 Current detection time		0.00~5.00 s		0.0 s
	F7.45 Brake Release time		0.00~10.00 s		1.00 s
	F7.46 Current limiting while brake is released		0.00~200.0 %		120.0 %
	F7.47 Brake Apply Frequency		0.00~10.00 Hz		2.00 Hz
	F7.48 Brake Apply Delay		0.00~10.00 s		0.00 s
	F7.49 Brake Apply time		0.00~10.00 s		1.00 s

When the drive is running, output frequency reaches brake release frequency (F7.42), and at the same time begin to detect the current of the drive output, if motor current does not reach Brake Release Current Threshold (F7.43) in detection time (F7.44), the fault is reported (bAE), this feature prevents the contactor from being released when the output is connected with a contactor or loss of connection between drive and motor. Drive set the brake release signal then after the Brake Release time (F7.45) the drive begins the normal acceleration process. The output current of the drive is limited to F7.46, after acceleration current is limited by FC.05.
During deceleration, the drive first slows down to the Brake Apply Frequency (F7.47) waiting F7.48 before apply brake, through Brake Apply time (F7.49) after the drive direct shutdown.
See Figure below for detailed actions.

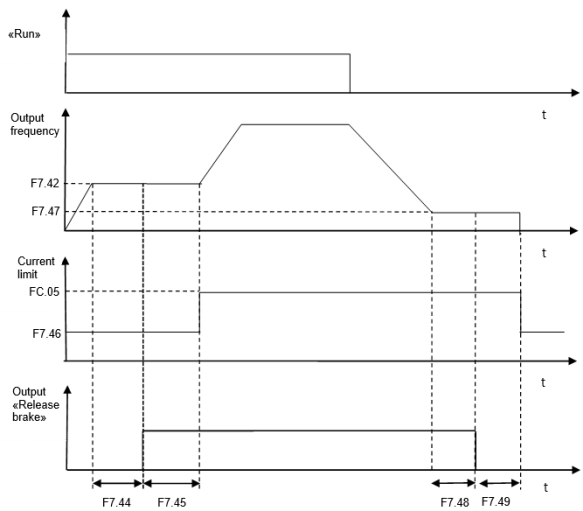

6.9 PID Parameters (F8)

Code	Description	Setting range	Default	Modify	Modbus Address
F8.00	Given quantity 1, choose	0: PID digital setting (F8.02) 1: AI1 2: AI2 3: Pulse input 4: serial communication	0: PID digital setting (F8.02)	o	0900H
F8.01	PID feedback channel selection	0: AI1 1: AI2 2: Pulse input 3: serial communication 4: AI1-AI2 5: AI1+AI2 6: MAX(AI1, AI2) 7: MIN(AI1, AI2)	1: AI2	o	0901H
F8.02	Analog PID digital setup	0.0~999.9	50.0	o	0902H
F8.03	Analog closed loop measuring range	1.0~999.9	100.0	o	0903H
F8.04	PID action polarity	0: Positive 1: Negative	0: Positive	o	0904H
F8.05	PID proportional gain 1 (KP1)	0.1~9.9	1.0	o	0905H
F8.06	PID integration time 1	0~100.0 s	② 10.0 s ③ 3.0 s	o	0906H
F8.07	PID differential time 1	0.00~1.00 s	0.00 s	o	0907H
F8.08	PID proportional gain 2 (KP2)	0.1~9.9	1.0	o	0908H
F8.09	PID integration time 2	00.00~100.0 s	10.00 s	o	0909H
F8.10	PID differential time 2	0.00~1.00 s	0.00 s	o	090AH
F8.11	PID parameters switching	0: No switching, use the first group parameters 1: switching by terminal 2: auto-switching by deviation	0: No switching, use the first group parameters	o	090BH
F8.12	PID parameter switching Deviation 1	0.0~999.9	20.0	o	090CH
F8.13	PID parameter switching Deviation 2	0.0~999.9	80.0	o	090DH
F8.14	PID delay timeconstant	0.00~100.0 s	0.00 s	o	090EH
F8.15	Deviation limit	0.0~999.9	0.2	o	090FH
F8.16	PID output positive limit	0.0~550.0 Hz	50.00 Hz	o	0910H
F8.17	PID output negative limit	-320~320.0 Hz	0.00 Hz	0	0911H
F8.18	PID preset freq.	0.00~550.0 Hz	0.00 Hz	x	0912H
F8.19	Hold time of PID preset frequency	0.0~3600 s	0.0 s	x	0913H
F8.20	Enable sleep mode	0: Disabled 1: Lower limit frequency sleep mode 2: Disturbance sleep mode	0: Disabled	x	0914H
F8.21	Sleep mode delay	0~999 s	120 s	o	0915H
F8.22	Sleep mode threshold	0.0~320.0 Hz	20.0 Hz	o	0916H
F8.23	Wake threshold	0.0~200.0 % (relative to pre-set value)	80.0 %	o	0917H
F8.24	PID feedback offline detection range	0.0~100.0 % (relative to feedback measuring range, 0.0% no detection)	0.0 %	o	0918H
F8.25	PID feedback offline detection time	0.0~50.0 s	2.0 s	o	0919H
F8.26	PID feedback offline detection Min. Freq.	0.00~50.00 Hz	10.00 Hz	o	091AH
F8.27	PID feedback disconnection handling	0: Not processed 1: Alarm and shutdown 2: Alarm but without shutdown, maintain the frequency before disconnection 3: Alarm but without shutdown, operate at a preset frequency (F8.28)	0: Not processed	o	091BH
F8.28	PID feedback dropout preset frequency	0.00~550.0 Hz	50.00 Hz	o	091CH
F8.29	PID given quantity 2 options	0: PID digital setting (F8.02) 1: AI1 2: AI2 3: Pulse input 4: serial communication	0: PID digital setting (F8.02)	o	091DH

Code	Description	Setting range	Default	Modify	Modbus Address
F8.30	PID given channel selection preset frequency	0: PID pre-set 1(F8.00) 1: PID pre-set 2(F8.29) 2: PID pre-set 1 + PID pre-set 2 3: PID pre-set 1 and PID pre-set 2 is selected by terminals (50 function), the terminal is pre-set 1 when invalid and pre-set 2 when valid 4: PID pre-set 1 + PID pre-set 2, the terminal is pre-set 1 + pre-set 2 when invalid and pre-set 2 when valid 5: MIN(PID pre-set 1, pre-set 2) 6: MAX(PID pre-set 1, pre-set 2)	0: PID pre-set 1(F8.00)	o	091EH
F8.31	Frequency stabilization time	0.0~10.0 min	2.0 min	o	091FH
F8.32	Pressure error threshold in dormancy	0.0~100.0 %	3.0 %	o	0920H

Parameter	**F8.00** Given quantity 1, choose	Range	0~4	Default	0

Value	Function	Description
0	PID digital setting,	Determined by F8.02.
1	AI1 terminal.	Taken as 0~10 V analog voltage input.
2	AI2 terminal.	Taken as 0~10 V analog voltage or 0~20 mA current input, which can be selected by DIP switch setting.
3	Pulse input	
4	Serial communication.	The input value should in 0~100.00 % (0~10000). 100.00 % corresponds to the full scale of PID.

NOTE

The relationship between AI1, AI2 & pulse frequency and the actual physical quantities can be seen in F6.10 ~ F6.26. Its full range (100.0 %) of actual physical quantities correspond to the PID full range.

Parameter	**F8.01** PID feedback channel selection	Range	0~7	Default	1

Value	Function	Description
0	AI1 terminal	Taken as 0~10 V analog voltage input.
1	AI2 terminal	Taken as 0~10 V analog voltage or 0~20 mA current input, which can be selected by DIP switch setting.
2	Pulse input	
3	Serial communication	The input value should in 0~100.00 % (0~10000). 100.00 % corresponds to the full scale of PID.
4	AI1-AI2	AI1-AI2 as PID feedback, if the result is negative the feedback value is negative
5	AI1+AI2	AI1+ AI2 as PID feedback, if the result is bigger than the actual physical quantities (100 %) the PID feedback quantity is the 100 % full range.
6	MAX (AI1, AI2)	Take the larger one between AI1 and AI2 as the PID feedback.
7	MIN (AI1, AI2)	Take the smaller one between AI1 and AI2 as the PID feedback.

Parameter	**F8.02** Analog PID digital setup	Range	0.0~999.9	Default	50.0

When analog PID is selected by setting F8.00 =0, this parameter determines the source of the PID feedback.

Parameter	**F8.03** Analog closed loop measuring range	Range	1.0~999.9	Default	100.0

It is the setting range for analog PID setting and PID feedback value, it must match the actual measuring range. The 100 % physical quantity of AI1, AI2 and pulse input correspond to analog PID range.

Parameter	**F8.04** PID action direction	Range	0~1	Default	0

Value	Function	Description
0	Positive	When the PID reference increases, the output frequency will increase and the controlled physical value will increase, such as water supply system.
1	Negative	When the PID reference increases, the motor speed decreases with setting value such as refrigeration system.

Parameter		Range		Default	
	F8.05 PID proportional gain 1 (KP1)		0.1~9.9		1.0
	F8.06 PID integration time 1		0.00~100.0 s		② 10.00 s ③ 3.00 s
	F8.07 PID differential time 1		0.00~1.00 s		0.00 s
	F8.08 PID proportional gain 2 (KP2)		0.01~9.9		1.0
	F8.09 PID integration time 2		0.00~100.0 s		10.00 s
	F8.10 PID differential time 2		0.00~1.00 s		0.00 s

The proportional gain (KP) is the parameter that decides the sensitivity of P action in response to the deviation. The bigger the proportional gain KP is, the more sensitive the system acts and the faster the drive responses. However, oscillation may easily come into being and regulation time extends. When KP is too big, the system tends to instability. When KP is too small, the system will slow, and responses lag.
Use integration time to decide the effect of integral action. The longer the integration time, the slower the response, and the worse the ability of control external disturbance variation. The smaller the integration time is, the stronger the integral take effect. The smaller integration time can eliminate the steady state error and improve control precision, fast response. However, oscillation may easily occur, and the system stability decrease, if the integration time is too small.
Differential time define the effect of differential action. The bigger differential time can attenuate the oscillation caused by P action more quickly when deviations occurs and short the regulation time. However, if differential time is too big, oscillation may occur. If the differential time is small, the attenuation effect will be small when deviations come into being and the regulation time is longer. Only the right differential time can reduce regulation time.

NOTE

NE200/300 drive has two sets of PID parameters, determined by F8.11. The first group PID parameters are taken as default.

Parameter	F8.11 PID parameters switching	Range	0~2	Default	0

Value	Function	Description
0	No switching	Use the first group parameters
1	Switching by terminal	To defined the multi-function terminals to switch two groups of PID parameters.
2	Auto-switching by deviation	Refer to the F8.12, F8.13 instructions.

Parameter		Range		Default	
	F8.12 PID parameters switching Deviation 1		0.0~999.9		20.0
	F8.13 PID parameters switching Deviation 2		0.0~999.9		80.0

Two groups of PID parameters can be switched by feedback deviation from the preset PID value. It is shown in Figure 6-24 as below.

Figure 6-24 PID parameters switching

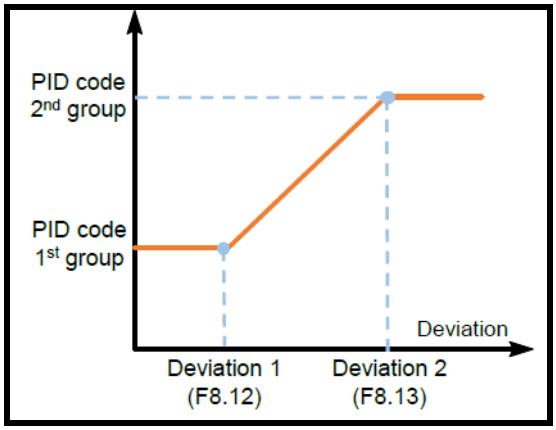

Parameter	F8.14 PID delay time constant	Range	0.00~100.0 s	Default	0.0 s

The PID control frequency output delay time setting.

Parameter	F8.15 Deviation limit	Range	0.00~999.9 s	Default	0.2 s

When the deviation of feedback value from preset value lies within the deviation limit range, PID regulator stops adjustment. The proper settings of this function can reach a balance between system output accuracy and stability.

Parameter		Range		Default	
	F8.16 PID output positive limit		0.0~550.0 Hz		50.00 Hz
	F8.17 PID output negative limit		-320.0~320.0 Hz		0.00 Hz

The two parameters are used to limit the output range of the PID regulator. When PID regulating is set to be the frequency reference, user can adjust the negative limit of the PID for reverse control, e.g. setting F8.17=30.00 Hz to limit the reversed rotation within 30 Hz. When PID and other channels are combined as frequency reference, the PID positive and negative limit can be adjusted according to actual application needs. For example, when PID and AI1 is overlapped to be frequency reference, and if system requires PID to conduct fine adjust of ±5 V based on AI1, both F8.16 and F8.17 are to be set as 5.00 Hz and -5.00 Hz respectively.

Parameter		Range		Default	
	F8.18 PID preset freq.		0.00~550.0 Hz		0.00 Hz
	F8.19 Hold time of PID preset frequency		0.0~3600 s		0.00 s

When the PID operation begins, the frequency will ramp up to the PID preset frequency (F8.18) according to the Acc time. The drive will keeps running at this preset frequency for a period of time set by F8.19, and then starts to conduct PID characteristic regulating as shown in Figure 6-25.

Figure 6-25 PID preset frequency and holding time

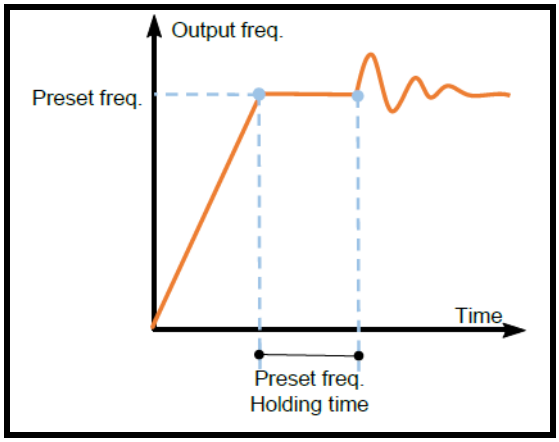

NOTE

If you do not need the preset frequency function, set the preset frequency =0.

Parameter		Range		Default	
	F8.20 Enable Sleep mode		0~2		0

0	Disabled
1	Lower limit frequency sleep mode
2	Disturbance sleep mode

Parameter		Range		Default	
	F8.21 Sleep mode delay		0~999 s		120 s
	F8.22 Sleep mode threshold		0.00~320.0 Hz		20.00 Hz
	F8.23 Wake threshold		0.0~200.0 %		80.0 %

When the output frequency is lower than the sleep mode threshold value and remains under this threshold for a lag time defined in F8.21, PID will enter the dormant state, which means the output frequency goes to 0 Hz. The drive will quit the dormant state if PID feedback value is lower than awaken threshold (F8.23).

Parameter		Range		Default	
	F8.24 PID feedback offline detection range		0~100.0 %		0.00 %
	F8.25 PID feedback offline detection time		0.0~50.0 s		2.0 s
	F8.26 Wake threshold		0.00~50.00 Hz		10.00 Hz

When the running frequency is higher than F2.26 and feedback signal is lower than F8.24 for a period of time defined by F8.25, the drive will give alarm (PID offline).

Parameter		Range		Default	
	F8.27 PID feedback disconnection handling		0~3		0

0	Not processed
1	Alarm and shutdown
2	Alarm but without shutdown, maintain the frequency before disconnection
3	Alarm but without shutdown, operate at a preset frequency (F8.28)

Parameter		Range		Default	
	F8.28 PID feedback dropout preset frequency		0.00~550.00 Hz		50.00 Hz
	F8.29 PID given quantity 2 options		0~4		0

0	PID digital setting (F8.02)
1	AI1
2	AI2
3	Pulse input
4	Serial communication

Parameter	**F8.30** PID given channel selection preset frequency	**Range**	0~6	**Default**	0

0	PID pre-set 1(F8.00)
1	PID pre-set 2(F8.29)
2	PID pre-set 1 + PID pre-set 2
3	PID pre-set 1 and PID pre-set 2 is selected by terminals (50 function), the terminal is pre-set 1 when invalid and pre-set 2 when valid
4	PID pre-set 1 + PID pre-set 2, the terminal is pre-set 1 + pre-set 2 when invalid and pre-set 2 when valid
5	MIN(PID pre-set 1, pre-set 2)
6	MAX(PID pre-set 1, pre-set 2)

Parameter	**F8.31** Frequency stabilization time	**Range**	0.0~10.0 min	**Default**	2.0 mins
	F8.32 Pressure error threshold in dormancy		0.0~100.0 %		3.0 %

6.10 PLC and Multi-steps group (F9)

Code	Description	Setting range	Default	Modify	Modbus Address
F9.00	Multi-step freq.1	0.00~Max frequency	5.00 Hz	o	0A00H
F9.01	Multi-step freq.2		10.00 Hz	o	0A01H
F9.02	Multi-step freq.3		15.00 Hz	o	0A02H
F9.03	Multi-step freq.4		20.00 Hz	o	0A03H
F9.04	Multi-step freq.5		30.00 Hz	o	0A04H
F9.05	Multi-step freq.6		40.00 Hz	o	0A05H
F9.06	Multi-step freq.7		50.00 Hz	o	0A06H
F9.07	PLC running mode	0: Single cycle 1: Single cycle and hold final value 2: Continuous cycle	2: Continuous cycle	x	0A07H
F9.08	PLC restarting mode after interrupt	0: Restart from first step 1: Continue from the step where the drive interrupted	0: Restart from first step	x	0A08H
F9.09	PLC status recorded or not at power failure	0: Not save 1: Save	0: Not save	x	0A09H
F9.10	Time unit select for each duration of PLC processing	0: Second 1: Minute	0: Second	x	0A0AH
F9.11	PLC step1 duration (T1)	0.1~3600	20.0	o	0A0BH
F9.12	PLC step2 duration (T2)	0.0~3600	20.0	o	0A0CH
F9.13	PLC step3 duration (T3)	0.0~3600	20.0	o	0A0DH
F9.14	PLC step4 duration (T4)	0.0~3600	20.0	o	0A0EH
F9.15	PLC step5 duration (T5)	0.0~3600	20.0	o	0A0FH
F9.16	PLC step6 duration (T6)	0.0~3600	20.0	o	0A10H
F9.17	PLC step7 duration (T7)	0.1~3600	20.0	o	0A11H
F9.18	Step T1 program running setting	1 F/r ~ 4 F/r	1F	o	0A12H
F9.19	Step T2 program running setting	1 F/r ~ 4 F/r	1F	o	0A13H
F9.20	Step T3 program running setting	1 F/r ~ 4 F/r	1F	o	0A14H
F9.21	Step T4 program running setting	1 F/r ~ 4 F/r	1F	o	0A15H
F9.22	Step T5 program running setting	1 F/r ~ 4 F/r	1F	o	0A16H
F9.23	Step T6 program running setting	1 F/r ~ 4 F/r	1F	o	0A17H
F9.24	Step T7 program running setting	1 F/r ~ 4 F/r	1F	o	0A18H
F9.25	② Current step running time ③ Current running step	② 0.0~3600 ③ 1~7	0 0	*	0A19H
F9.26	② Current running step ③ Current step running time	② 1~7 ③ 0.0~3600	0 0	*	0A1AH
F9.27	Multi-step freq.8	0.00~Max frequency	50.00 Hz	o	0A1BH
F9.28	Multi-step freq.9	0.00~Max frequency	50.00 Hz	o	0A1CH
F9.29	Multi-step freq.10	0.00~Max frequency	50.00 Hz	o	0A1DH
F9.30	Multi-step freq.11	0.00~Max frequency	50.00 Hz	o	0A1EH
F9.31	Multi-step freq.12	0.00~Max frequency	50.00 Hz	o	0A1FH
F9.32	Multi-step freq.13	0.00~Max frequency	50.00 Hz	o	0A20H
F9.33	Multi-step freq.14	0.00~Max frequency	50.00 Hz	o	0A21H
F9.34	Multi-step freq.15	0.00~Max frequency	50.00 Hz	o	0A22H
F9.35	PLC Multi-step Freq.1 selection	0:Multi-step digital setting 1: AI1 2: AI2 3: Keypad potentiometer 4: Pulse input	0:Multi-step digital setting	o	0A23H
F9.36	PLC Multi-step Freq.7 selection		0:Multi-step digital setting	o	0A24H

Parameter	**F9.00** Multi-step freq. 1	**Range**	0.00~Max frequency	**Default**	5.00 Hz
	F9.01 Multi-step freq. 2				10.00 Hz
	F9.02 Multi-step freq. 3				15.00 Hz
	F9.03 Multi-step freq. 4				20.00 Hz
	F9.04 Multi-step freq. 5				30.00 Hz
	F9.05 Multi-step freq. 6				40.00 Hz
	F9.06 Multi-step freq. 7				50.00 Hz

Define Multi-steps frequency respectively, which can be used in Multi-step speed running and simple PLC running.
For Multi-steps speed running, Multi-step speed frequency can be selected by multi-step terminals. While in simple PLC running, Multi-step speed frequency is decided by present running step. It is shown in Figure 6-26.

Parameter	**F9.07** PLC running mode	**Range**	0~2	**Default**	2

Value	Function	Description
0	Single cycle 1	The drive stops automatically after one cycle of operation and will start when receiving RUN command again.
1	Single cycle and hold the final value	The drive will hold the operating frequency and direction of last step after completing one cycle of operation.
2	Single cycle and hold the final value	The drive will start next cycle of operation automatically after completing one cycle of PLC operation until receiving STOP command.

Parameter	**F9.08** PLC restarting mode after interrupt	**Range**	0~1	**Default**	0

Value	Function	Description
0	Restart from first step	If the drive stops during PLC operation because of receiving STOP command or fault, or power loss, it will restart from the first step after restarting.
1	Continue from the step where the drive was interrupted	When the drive stops during PLC operation because of receiving STOP command or fault, it will record the already running time of the present step. After restart, the drive automatically enters the specific step where it was interrupted and run the left time of this step with the step frequency.

Parameter	**F9.09** PLC status recorded or not at power failure	**Range**	0~1	**Default**	0

0	Not save
1	Save

Parameter	**F9.10** Time unit select for each duration of PLC processing	**Range**	0~1	**Default**	0

0	Second
1	Minute

Parameter	**F9.11** PLC step1 duration (T1)	**Range**	0.1~3600	**Default**	20.0
	F9.12 PLC step2 duration (T2)		0.0~3600		
	F9.13 PLC step3 duration (T3)		0.0~3600		
	F9.14 PLC step4 duration (T4)		0.0~3600		
	F9.15 PLC step5 duration (T5)		0.0~3600		
	F9.16 PLC step6 duration (T6)		0.0~3600		
	F9.17 PLC step7 duration (T7)		0.1~3600		

Configure the running time of each PLC running step. If the running time of the step is set to 0, the drive will skip the step and run the next step, as shown in Figure 6-26.

Parameter	**F9.18** Step T1 program running setting	**Range**	1F/r~4F/r	**Default**	1F
	F9.19 Step T2 program running setting				
	F9.20 Step T3 program running setting				
	F9.21 Step T4 program running setting				
	F9.22 Step T5 program running setting				
	F9.23 Step T6 program running setting				
	F9.24 Step T7 program running setting				

F9.18~F9.24 are used to configure the direction and Acc/Dec time of each PLC running step. There are total 8 kinds of combinations could be selected, please refer to Table 6-9 for the details.

Table 6-9 PLC program running setting

Combination	Acc/Dec time	Direction
1F	Acc/Dec time 1	F:Forward
1r		r: Reverse
2F	Acc/Dec time 2	F:Forward
2r		r: Reverse
3F	Acc/Dec time 3	F:Forward
3r		r: Reverse
4F	Acc/Dec time 4	F:Forward
4r		r: Reverse

Figure 6-26 Simple PLC running

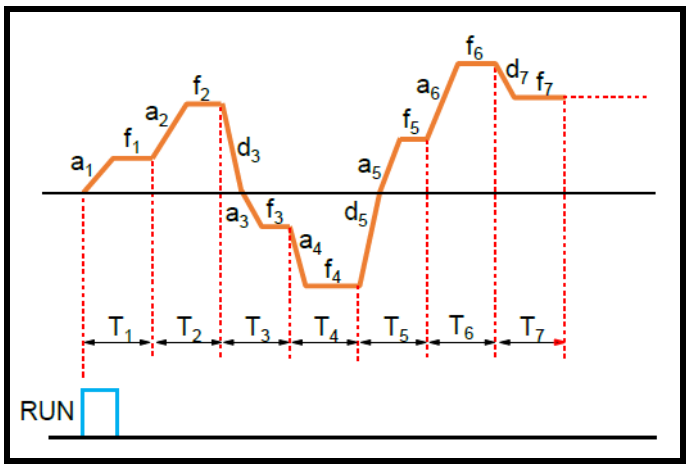

NOTE

In Figure 6-26, f_1~f_7, a_1~a_7, d1~d_7 and T_1~T_7 respectively correspond to step frequency, Acc Time, Dec Time and running time.

Parameter	**F9.25** ② Current step running time ③ Current running step	**Range**	0.0~3600 1~7	**Default**	0
	F9.26 ③ Current step running time ② Current running step		0.0~3600 1~7		0

Records the step that the PLC is currently operating at.
Records the operating time of the step that the PLC is currently running at.

Parameter	**F9.27** Multi-step freq. 8	**Range**	0.00~Max frequency	**Default**	50.00 Hz
	F9.28 Multi-step freq. 9				
	F9.29 Multi-step freq. 10				
	F9.30 Multi-step freq. 11				
	F9.31 Multi-step freq. 12				
	F9.32 Multi-step freq. 13				
	F9.33 Multi-step freq. 14				
	F9.34 Multi-step freq. 15				

Define Multi-steps frequency respectively, which can be used in Multi-step speed running. The terminals defined as multi-steps decide which step to be run. (See Table 6-4)

Parameter	**F9.35** PLC Multi-step frequency 1 selection **F9.36** PLC Multi-step frequency 7 selection	Range	0~4	Default	0

Define Multi-step 1 & 7 frequency source.

When the setting is 0, the first step and the 7th step speed is F9.00 and F9.06

0	Multi-steps running
1	AI1 terminal
2	AI2 terminal
3	Keypad potentiometer
4	Pulse input

6.11 Wobble frequency running group (FA)

Code	Description	Setting range	Default	Modify	Modbus Address
FA.00	Wobble amplitude	0.0~50.0 %	0.0 %	o	0B00H
FA.01	Jitter frequency	0.0~50.0 % (to FA.00)	0.0 %	o	0B01H
FA.02	Jitter Time	5~50 ms	5 ms	o	0B02H
FA.03	Wobble freq. up time	0.1~999.9 s	5.0 s	o	0B03H
FA.04	Wobble freq. down time	0.1~999.9 s	5.0 s	o	0B04H
FA.05	Amplitude mode	0: Relative to the central freq. 1: Relative to Max. frequency	0: Relative to the central freq.	o	0B05H

The wobble frequency running function is to make the drive output frequency wobbling up and down with the setup frequency as the center. The trace of running frequency at the time axis is shown in Figure 6-27, of which the swing amplitude is set by FA.00.When FA.00 is set to 0, indicating the swing amplitude is 0, the wobble frequency function is disabled.

Figure 6-27 Wobble frequency running diagram

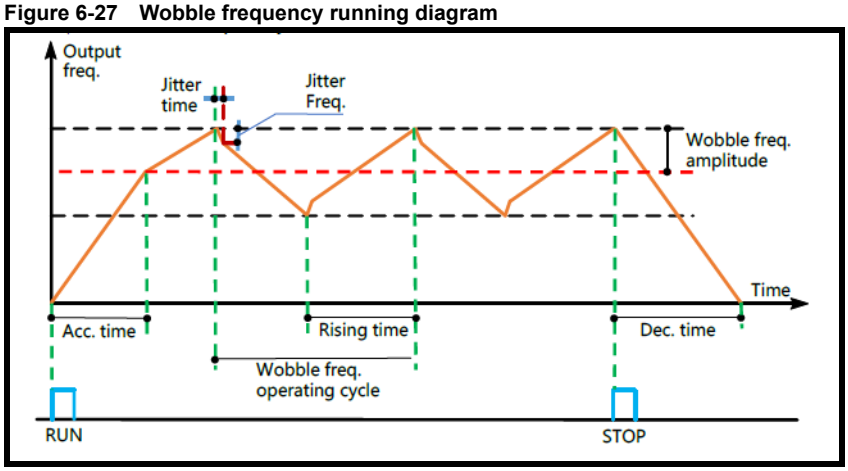

Parameter		Range		Default	
	FA.00 Wobble frequency amplitude		0.0~50 %		0.0 %
	FA.01 Jitter frequency		0.0~50 % (Relative to FA.00)		0.0 %
	FA.02 Jitter Time		5~50 ms		5 ms
	FA.03 Wobble freq. rising time		0.1~999.9 s		5.0 s
	FA.04 Wobble freq. dropping time		0.1~999.9 s		5.0 s

Wobble frequency amplitude: The running amplitude around setup frequency.

Wobble frequency rising time: The time takes from the peak base (lowest frequency in the swing) to the peak height (highest frequency in the swing).

Wobble frequency dropping time: The time takes from the peak height (highest frequency in the swing) to peak base (lowest frequency in the swing).

Parameter	**FA.05** Amplitude setting mode	Range	0~1	Default	0

Value	Function	Description
0	Relative to the central frequency	It is variable swing amplitude system. The swing amplitude varies with the change of central frequency (setup frequency).
1	Relative to the maximum frequency	It is fixed swing amplitude system. The swing amplitude is fixed.

6.12 Fixed-length control group (Fb)

Code	Description	Setting range	Default	Modify	Modbus Address
Fb.00	Preset length	0~65530 *	0	o	0C00H
Fb.01	Actual length	0~65530 *	0	*	0C01H
Fb.02	Pulses number per unit	000.1~999.9 1000~6553	10.0	o	0C02H
Fb.05	③ Zero servo enable	0: invalid 1: Start when the set frequency is below zero servo frequency 2: Terminal start zero servo (can be started without running command)	0	x	0C05H
Fb.06	③ Zero servo enable starting frequency	0.00~10.00 Hz	1.00 Hz	o	0C06H
Fb.07	③ Position loop gain	0.001~10.00	1	o	0C07H

*Display shows most significant 4 digits e.g. 65530 will display 6553.

Parameter	**Fb.00** Preset length	**Range**	0~65530	**Default**	0
	Fb.01 Actual length		0~65530		0
	Fb.02 Pulse number per unit		0.1~6553.0		100.0

The preset length (Fb.00), actual length (Fb.01) and number of pulse per-unit (Fb.02) are mainly used for fixed-length control. The length is calculated via the pulse signal input by the discrete input terminal, which needs to set the corresponding input terminal to length count input terminal. And input terminal X4 or X5 is usually used when the pulse frequency is relatively high.

Actual length = counted terminal input pulse number ÷ number of pulse per unit.

When the actual length Fb.01 exceeds the preset length Fb.00, the multifunction digital output terminal defined as “length arrival terminal” will output ON signal.

Parameter	**Fb.05** ③ Zero servo enable	**Range**	0~2	**Default**	0

Value	Function
0	Invalid
1	Start when the set frequency is below zero servo frequency
2	Terminal start zero servo (can be started without running command)

Parameter	**Fb.06** ③ Zero servo enable starting frequency	**Range**	0.00~10.00 Hz	**Default**	1.00 Hz
	Fb.07 ③ Position loop gain		0.001~10.00		1

6.13 Protection and fault parameters group (FC)

Code	Description	Setting range	Default	Modify	Modbus Address
FC.00	Motor overload protection mode	0: Disabled 1: Common motor (with low speed compensation) 2: Variable frequency motor (without low speed compensation)	0: Disabled	x	0D00H
FC.01	Electro thermal protection value	② 20~110 % ③ 20~200 %	100 %	o	0D01H
FC.02	Overload Pre-alarm detection level	30.0~200.0 %	160.0 %	o	0D02H
FC.03	Overload Pre-alarm detection time	0.0~80.0 s	60.0 s	o	0D03H
FC.04	Current amplitude limit	0:Invalid 1: Acc./Dec. valid; Constant speed invalid 2: Valid all the time 3: Constant speed is valid, acceleration and deceleration are invalid	2: Valid all the time	o	0D04H
FC.05	Current amplitude limit level	Type G: 80.0~200.0 % Type P: 60.0~150.0 %	G: 160.0 % P: 120.0 %	o	0D05H
FC.06	Over voltage stall function	0: Invalid (Recommended if braking resistor mounted) 1: Valid for Acc/Dec. 2: Valid all the time	1: Valid for Acc/Dec.	x	0D06H
FC.07	Overvoltage point for stall	110.0~150.0 % (Bus voltage)	140.0%	x	0D07H
FC.08	Input phase loss detection	1~100 % (100 % correspond to 800 V)	20 %	x	0D08H
FC.09	Input phase loss detection delay time	2~255 s	10 s	x	0D09H
FC.10	Output phase loss detection	0: Invalid 1: Valid	1: Valid	o	0D0AH
FC.11	Terminal close fault detection	0: Invalid 1: Valid	1: Valid	o	0D0BH
FC.12	Fault auto reset times	0~10,"0" means auto reset is disabled. Only 3 faults have auto reset function	0	x	0D0CH
FC.13	Fault auto reset interval	0.1~20.0 s/time	5.0 s	x	0D0DH
FC.14	Under-voltage fault treatment	0: No treatment 1: Auto reset at power recovery 2: Auto run at power recovery (Auto run time interval is F1.16)	0: No treatment	o	0D0EH
FC.15	Fast current limit	50.0 %~100.0 % (100 % means this function is disabled.)	Depends on model	o	0D0FH
FC.16	Fast current limit time	0.01~1.00 s	② 0.10 s ③ 0.20 s	o	0D10H
FC.17	Overvoltage suppression mode	0.00~10.00 Hz	0.00 Hz	o	0D11H
FC.18	Select suppression overvoltage methods	0: Method 1 1: Method 2 2: Method 3	0: Method 1	o	0D12H
FC.19	Treatment select while overvoltage forewarning	0: Warning and continue running 1: Fault cause stopping	0: Warning and continue running	o	0D13H
FC.20	Undervoltage status indication	0: Yes 1: No	0: Yes	o	0D14H
FC.21	Low current detection value	0.0~200.0 %	0.0 %	o	0D15H
FC.22	Low current detection time	0.0~180.0 s	0.0 s	o	0D16H
FC.23	Low current detection alarm fault selection	0: Alarm, invertor continues to drive 1: Alarm, Inverter shutdown	0: Alarm, inverter continues to drive	o	0D17H
FC.24	Ground short circuit protection	0: Invalid 1: First running test of the power-on 2: Detected on every run	1: First running test of the power-on	o	0D18H
FC.25	③ Protection value of motor thermistor	0.0~300.0 °C	0 °C	o	0D19H
FC.26	③ Motor thermistor protection action	0: Alarm, inverter continues to drive 1: Alarm, Inverter shutdown	0: Alarm, inverter continues to drive	o	0D1AH

Parameter	**FC.00** Motor overload protection mode	Range	0~2	Default	0

0: Disabled
The overload protection is disabled. Be cautious to use this function because the drive will not protect the motor in case of overload.
1: Common motor (with low speed compensation)
Since the cooling effects of common motor deteriorates at low speed (below 30 Hz), the motor's overheat protecting threshold should be lowered, which is called low speed compensation.
2: Variable frequency motor (without low speed compensation)
The cooling effects of variable frequency motor are not affected by the motor's speed, so low speed compensation is not necessary.

Parameter	**FC.01** Electro thermal protective value	Range	② 20~110 % ③ 20~200 %	Default	100 %

In order to apply effective overload protection to different kinds of motors, the Max output current of the drive should be adjusted, as shown in Figure 6-28.

Figure 6-28 Motor overload protection curve

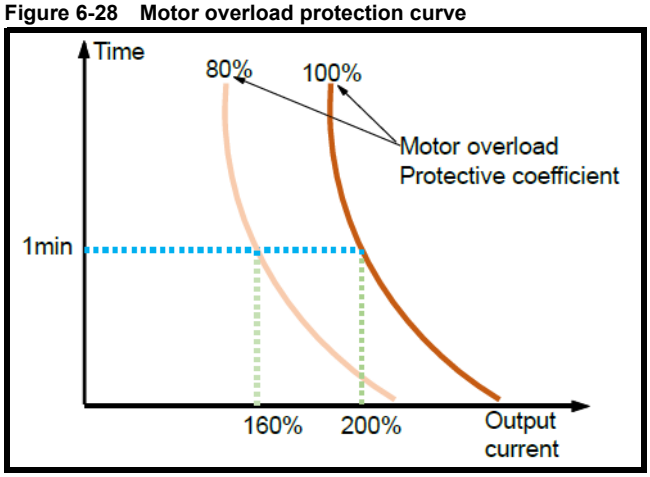

Motor overload protection coefficient calculates:

$C_m=(A_{max}/A_o)$ x100 %
C_m: Motor overload protection coefficient
A_{max}: the max allowed current of load
A_o: rated output current of drive

Generally, the Max load current is the motor rated current.

Parameter	**FC.02** Pre-overload detection Level	Range	30.0~200.0 %	Default	160.0 %
	FC.03 Pre-Overload detection time		0.0~80.0 s		60.0 s

FC.02 defines the current threshold for overload pre-alarm protection. The setting range is a percentage value of rated current.

FC.03 defines the time during which the drive current exceeds FC.02. If the drive continuous output current is larger than FC.02 for some time defined in FC.03, the drive will output pre-alarm signal (OLP2).

Parameter	**FC.04** Current amplitude limit	Range	0~3	Default	2

During the Acc/Dec running, if the drive actual current exceeds the “Current amplitude limiting level” (FC.05), the drive stops the Acc/Dec process until the current is lower than the limit point.

In the drive’s constant speed operating process, if FC.04 is set to 2, when the drive actual current exceeds “Current amplitude limiting level” (FC.05), the drive will reduce output frequency till the current gets lower than the limit point. Then the drive will accelerate to the previous constant speed status.

Value	Function	Description
0	Invalid	
1	Acc./Dec. valid	Constant speed invalid
2	Valid all the time	
3	Constant speed is valid	Acc./Dec. invalid

Parameter	**FC.05** Current amplitude limit level	**Range**	Type G: 80.0~200.0 % Type P: 60.0~150.0 %	**Default**	160.0 % 120.0 %

This parameter is used to define the current limiting level.

Parameter	**FC.06** Over voltage stall function	**Range**	0~2	**Default**	1

Over voltage stall function selection.
If the bus voltage exceeds the over-voltage stall point defined by FC.07, the drive will stop Acc/Dec.
In the drives constant speed operating process, if the bus voltage exceeds the stall overvoltage point, the drive will raise its output frequency. The Acc/Dec time is defined by Acc/Dec time 4.

Value	Function	Description
0	Invalid	
1	Acc./Dec. valid	Constant speed invalid
2	Valid all the time	

Parameter	**FC.07** Over-voltage point for stall	**Range**	110.0~150.0 % Bus voltage	**Default**	140.0 %

Define the stall over voltage point.

Parameter	**FC.08** Input phase loss detection level	**Range**	1~100 %	**Default**	20 %
	FC.09 Input phase loss detection delay		2~255 s		10 s

Input phase loss detection function can detect loss of input phase or a serious imbalance in the three-phase input, in order to protect drive. If the input phase loss detection is too sensitive, you can appropriately increase the detection level (FC.08) and detection delay time (FC.09) and vice versa. When FC.08 is set to 100 %, there is no input phase loss protection.

Parameter	**FC.10** Output phase loss detection	**Range**	0~1	**Default**	1

Output phase loss detect function can detect loss of output phase or a serious imbalance in the three-phase output, in order to protect drive and motor.

0	Invalid
1	Valid

Parameter	**FC.11** Terminal close fault detection	**Range**	0~10	**Default**	0

0	Invalid
1	Valid

When the drive does not allow the restart after power failure recovery (F1.15=0 or 2), and at the same time the drive run command is controlled by terminal, the drive will give “terminal close fault” (EF2) if the FWD or REV terminal close after power recovery.

Parameter	**FC.12** Fault auto reset times	**Range**	0~10	**Default**	0
	FC.13 Fault auto reset interval		0.1~20.0 s/time		5.0 s

Auto reset function can reset OC and OU according to preset reset times(FC.12) and reset interval (FC.13). During the reset interval, the drive stops output and runs at zero-speed. After the reset has been done, the drive will start according to preset starting mode. When the “reset times” is set to 0, the reset function is disabled, and the drive directly enters protection status.

NOTE

Only OC, OU has auto reset function.

Parameter	**FC.14** Under-voltage fault treatment	**Range**	0~2	**Default**	0

0	No treatment
1	Auto reset after power recovery (reset the UU fault only, do not run after fault reset.)
2	Auto run after power recovery (Auto run time interval is F1.16)

Parameter	**FC.15** Fast current limit	Range	50.0~100.0 %	Default	Depends on model
	FC.16 Fast current limit time		0.01~1.00 s		(2) 0.10 s (3) 0.20 s

This function is to protect the drive from tripping on fast current limit in case of large impact loads. If the drive is in fast current limit for a long time, the drive will give fast current limit fault (LC).
The smaller the fast-current-limit value, the smaller loss in the IGBT's. But too small current limit value could also cause abnormal working of the drive. When the fast-current-limit value is set to 100 %, there is no fast-current limit function.

Parameter	**FC.17** Overvoltage suppression mode	Range	0.00~10.00 Hz	Default	0.00 Hz

When the motor is in generating status, the drive will raise the output frequency automatically to avoid tripping with over-voltage fault. When this parameter is set to 0.00 Hz, the suppression function is disabled.

Parameter	**FC.18** Select suppression overvoltage methods	Range	0~2	Default	0

0: Method 1
1: Method 2
2: Method 3

Parameter	**FC.19** Treatment select while overvoltage forewarning	Range	0~1	Default	0

0: Warning and running still
1: Fault cause stopping

Parameter	**FC.20** Reminding or not while undervoltage	Range	0~1	Default	0

0: Yes
1: No

Parameter	**FC.21** Low current detection value	Range	0.0~200.0 %	Default	0.0 %

NOTE

Based on the rated current of the frequency converter.

Parameter	**FC.22** Low current detection time	Range	0.0~180.0 s	Default	0.0 s
	FC.23 Low current detection alarm fault selection		0~1		0

0: Alarm, inverter continues to drive
1: Alarm, Inverter shutdown

Parameter	**FC.24** Low current detection value	Range	0~2	Default	1

0: invalid
1: First running test of the power-on
2: Detected on every run

NOTE

Valid for models below 18.5 kW

Parameter	③ **FC.25** Protection value of motor thermistor	Range	0.0~300.0 °C	Default	0.0 °C
	③ **FC.26** Motor thermistor protection action		0~1		0

0: Alarm, inverter continues to drive
1: Alarm, Inverter shutdown

6.14 Communication parameters group (Fd)

Code	Description	Setting range	Default	Modify	Modbus Address
Fd.00	485 Communication	0: Disabled RS485 1: Enabled RS485	1: Enabled RS485	o	0E00H
Fd.01	Local address	1~247	1	o	0E01H
Fd.02	Baud rate setup	0: 1200 bps 1: 2400 bps 2: 4800 bps 3: 9600 bps 4: 19200 bps 5: 38400 bps	② 3: 9600 bps ③ 4: 19200 bps	o	0E02H
Fd.03	Parity bit setup	0: Even parity check 1: Odd parity check 2: No parity check	0: Even parity check	o	0E03H
Fd.04	Communication timeout detection duration	Range: 0.0~100.0 s 0: No timeout detection Others: Timeout detection duration	0.0 s	o	0E04H
Fd.05	Response delay duration	0~500 ms	5 ms	o	0E05H
Fd.06	Communication Freq. setting coefficient	0.0~200.0 %	100.00 %	o	0E06H
Fd.07	Communication interrupt detection mode	0: Time interval between 2 packets receiving. 1: Time interval of 0005H Add. data writing	0: Time interval between 2 packets receiving	o	0E07H
Fd.08	Feedback or not (Y or N) While writing into COMMS setting	0: Y 1: N	0: Y	o	0E08H
Fd.09	Save the COMMS setting or not (Y or N) While power down	0: N 1: Y	0: N	o	0E09H
Fd.10	485 Terminal resistance	0: invalid 1: Valid	0: invalid	o	0E0AH

Parameter	**Fd.00** RS485 communication	**Range**	0~1	**Default**	1

Disable 485 communication function can effectively reduce the interference, when MODBUS communication is not used.

0	RS485 Disabled
1	RS485 Enabled

Parameter	**Fd.01** Local address	**Range**	1~247	**Default**	1

Define the drive's communicating address. The address set to 0 is for the broadcast address to realize the PC broadcasting; when the drive address is 247, it will serve as the host on the network to broadcast to other slave machines to achieve synchronization function.

NOTE

Local address should be the unique one; it is the foundation to realize point-to-point communication between the host and drive.

When the drive is set to be host, the broadcasting interval is the response delay time defined in Fd.05. If the response delay time is set to be too short, the communication networking might get abnormal.

Parameter	**Fd.02** Baud rate	**Range**	0~5	**Default**	② 3 ③ 4

Select the baud rate of serial communication. The master and the slave must keep the same baud rate setting. Otherwise, they cannot communicate normally.
Higher baud rate could have a faster communication.

0	1200 bps
1	2400 bps
2	4800 bps
3	9600 bps
4	19200 bps
5	38400 bps

Parameter	**Fd.03** Parity bit setup	**Range**	0~2	**Default**	0

Choose the way of parity check. The master and the slave must keep the same parity check setting. Otherwise, they cannot communicate normally.

0	Even parity check
1	Odd parity check
2	No parity check

Parameter	**Fd.04** Communication Timeout time	**Range**	0.0~100.0 s	**Default**	0.0 s

Set communication timeout detecting time. Once establishing communications, if there is no data communicating within timeout detection time (Fd.04), the drive will report communication error. If Fd.04 is set to 0, this function is disabled.

0	No timeout detection
Others	Timeout detection duration

Parameter	**Fd.05** Response delay	**Range**	0~500 ms	**Default**	5 ms

When the drive works as the slave, this parameter refers to the time from drive receiving the host PC command to returning response frame to it. When the drive works as the host, it refers to the interval of each broadcast.

Parameter	**Fd.06** Communication Freq. setting coefficient	**Range**	0.0~200.0 %	**Default**	100 %

When the frequency reference is set to be serial communication (F0.03=4), the frequency of the drive as a slave will be the host frequency by the coefficient defined in this parameter.

Parameter	**Fd.07** Communication interrupt detection mode	**Range**	0~1	**Default**	0

0	Time interval between 2 packets receiving
1	Time interval of 0005H Add. data writing

Parameter	**Fd.08** Feedback or not (Y or N) While writing into COMMS setting	**Range**	0~1	**Default**	0

0	Y
1	N

Parameter	**Fd.09** Save the COMMS setting or not (Y or N) While power down	**Range**	0~1	**Default**	0

0	Y
1	N

Parameter	**Fd.10** 485 Terminal resistance	**Range**	0~1	**Default**	0

0	invalid
1	Valid

6.15 Operation interface & display group (FE)

Code	Description	Setting range	Default	Modify	Modbus Address
FE.00	Display parameter-type setup	0: Normal 3-levels menu display 1: Only display modified parameters	0: Normal 3-levels menu display	o	0F00H
FE.01	MFK Key function selection	0: MFK inactive 1: JOG running 2: FWD/REV switching 3: UP/DOWN clear 4: Running command switch (terminal or communication) 7: RUN for FWD, MFK for REV, STOP for STOP	0: MFK inactive	o	0F01H
FE.02	STOP key function	0: Valid only in keypad control mode 1: Valid in stop state of terminal/ communication control mode 2: Valid in Fault state of terminal/ communication control mode 3: Valid in both stop & fault state of terminal/ communication control mode	2: Valid in Fault state of terminal / communication control mode	o	0F02H
FE.03	Running freq.(Hz) (before compensation)	0: No display 1: Display at stop 2: Display at running 3: Display at stop & running	2: Display at running	o	0F03H
FE.04	Running freq. (Hz) (After compensation)		0: No display	o	0F04H
FE.05	Reference frequency (Hz blinking)		1: Display at stop	o	0F05H
FE.06	Output current (A)		2: Display at running	o	0F06H
FE.07	Bus voltage (V)		3: Display at stop & running	o	0F07H
FE.08	Output voltage (V)		0: No display	o	0F08H
FE.09	Output torque (%)		0: No display	o	0F09H
FE.10	Reference torque (% blinking)		0: No display	o	0F0AH
FE.11	Rotate speed (r/min)		0: No display	o	0F0BH
FE.12	Reference speed (r/min blinking)		0: No display	o	0F0CH
FE.13	Output power (kW)		0: No display	o	0F0DH
FE.14	AI1 (V)		0: No display	o	0F0EH
FE.15	AI2 (V)		0: No display	o	0F0FH
FE.16	Analog PID feedback		0: No display	o	0F10H
FE.17	Analog PID setup		0: No display	o	0F11H
FE.18	Terminal status (no unit)		0: No display	o	0F12H
FE.19	Actual length		0: No display	o	0F13H
FE.20	Reference length		0: No display	o	0F14H
FE.21	Linear speed (m/min)		0: No display	o	0F15H
FE.22	External count value (no unit)		0: No display	o	0F16H
FE.23	Set line speed display		0: No display	o	0F17H
FE.24	③ AI3 voltage (V) display		0: No display	o	0F18H

Parameter	**FE.00** Parameter display	Range	0~1	Default	0

0	Normal 3-levels menu display
1	Only display modified parameters

Parameter	**FE.01** MFK Key function selection	Range	0~7	Default	0

Value	Function	Description
0	MFK inactive	
1	JOG running	Used to start Jog running, the direction is set by function code F0.17
2	FWD/REV switching	MFK key is used to switch the running direction between forward and reverse. It is equivalent to modifying F0.17, but it will not be saved when power lost.
3	UP/DOWN clear	Used to clear the frequency set by external terminals (UP/DOWN) this is equal to the function of terminal “UP/ DOWN clear command”
4	Running command switch	MFK key is used to switch the run command mode between keypad control and remote command control (terminal command channel or serial communication command channel). And the current run command mode must be terminal or communications, otherwise this option is invalid
7	RUN for FWD, MFK for REV, STOP for STOP	

Parameter	**FE.02** STOP key function selection	**Range**	0~3	**Default**	2

This parameter is used to define the STOP key functions, including stop and fault reset.

0	Active only in the keypad control mode
1	STOP key stop function active in the terminal/communication control mode
2	STOP key fault reset function active in the terminal/ communication control mode
3	STOP key stop and fault reset function active in the terminal/ communication control mode

Parameter	**FE.03** Running freq. (Hz) (before compensation)	**Range**	0~3	**Default**	2
	FE.04 Running freq. (Hz) (after compensation)				0
	FE.05 Reference frequency (Hz, blinking)				1
	FE.06 Output current (A)				2
	FE.07 Bus voltage (V)				3
	FE.08 Output voltage (V)				0
	FE.09 Output torque (%)				0
	FE.10 Reference torque (%, blinking)				0
	FE.11 Rotate speed (r/min)				0
	FE.12 Reference speed (r/min blinking)				0
	FE.13 Output power (kW)				0
	FE.14 AI1 (V)				0
	FE.15 AI2 (V)				0
	FE.16 Analog PID feedback				0
	FE.17 Analog PID setup				0
	FE.18 Terminal status (no unit)				0
	FE.19 Actual length				0
	FE.20 Reference length				0
	FE.21 Linear speed (m/s)				0
	FE.22 External counting value (no unit)				0
	FE.23 Set line speed display				0
	FE.24 ③ AI3 voltage (V) display				0

These parameters define the display in stop and running monitoring condition.

0	No display
1	Display only in stop process
2	Display only during running
3	Display in stop and running

EXPLANATION

In stop process monitoring, if no parameter is set to show in monitor state, reference frequency will be displayed. In running monitoring state, if no parameter is set to be displayed, the output frequency (before compensation) will be displayed.

The indication for analog PID reference and analog PID feedback is “Hz” +” A”, For PID reference, the Hz+A is blinking; while for PID feedback, the Hz+A is constant ON.

The terminal status is shown by four digits of LED without unit indicator, the specific meaning shown in Figure 6-29. It is necessary to use the >> button to access this display.

Figure 6-29 Terminal status diagram

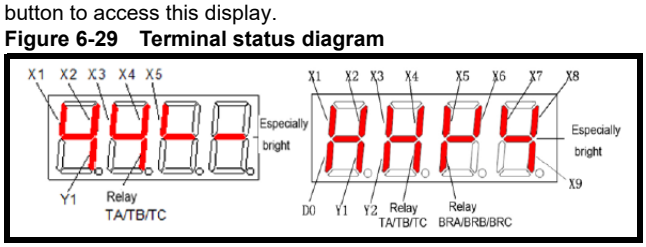

6.16 Running history record group (FF)

Code	Description	Setting range	Default	Modify	Modbus Address
FF.00	Type of latest fault	0~33 (Refer to Table 7-1 for detailed descriptions)	0: NULL	*	1000H
FF.01	Output freq. at latest fault	0~Frequency upper limit	0.00 Hz	*	1001H
FF.02	Reference frequency at latest fault	0~Frequency upper limit	0.00 Hz	*	1002H
FF.03	Output current at latest fault	0~2 drive rated current	0.0 A	*	1003H
FF.04	Bus voltage frequency at latest fault	0~1000 V	0 V	*	1004H

Code	Description	Setting range	Default	Modify	Modbus Address
FF.05	Running status at latest fault	0: **StP** Stop 1: **Acc** acceleration 2: **dEc** deceleration 3: **con** constant speed	0: **StP** Stop	*	1005H
FF.06	Fault history 1 (Last One)	The same as FF.00	NULL	*	1006H
FF.07	Fault history 2	The same as FF.00	NULL	*	1007H
FF.08	Total power on time	0~65530 h	0 h	*	1008H
FF.09	Total running time	0~65530 h	0 h	*	
FF.10	Reserved	Reserved	Reserved	-	100AH
FF.11	Software version number of control board	1.00~10.00	1.00	-	100BH
FF.12	Non-standard version number of software	0~255	0	-	100CH
FF.13	② Heat sink temperature ③ IGBT temperature	② -30.0~120.0 °C (-22.0~248.0 °F) ③ 0.0~140.0 °C (32.0~284.0 °F)	0.0 °C (32 °F)	-	100DH
FF.14	② Flux current	-200.0~200.0 °C		*	100EH
FF.15	③ Torque current	-200.0~200.0 °C		*	100FH
FF.16	③ Encoder fault code	bit 0~bit 12	NULL		
FF.17	Accumulated kilowatt-hours (Upper 16 bits)	(0~9999)*10000 kWh	0	-	1011H
FF.18	Accumulated kilowatt-hours (Low 16 bits)	0-9999 kWh	0 kWh	-	1012H
FF.20	③ Thermistor temperature	-100~300 °C (-148.0~572.0 °F)	0.0 °C	*	1013H

*Display shows most significant 4 digits e.g. 65530 will display 6553.

Parameter	**FF.00** Type of latest fault	**Range**	0~33	**Default**	NULL
	FF.01 Output freq. at latest fault		0~Frequency upper limit		0.00 Hz
	FF.02 Reference frequency at latest fault		0~Frequency upper limit		0.00 Hz
	FF.03 Output current at latest fault		0~2* drive rated current		0.0 A
	FF.04 Bus voltage frequency at latest fault		0~1000 V		0 V
	FF.05 Running status at latest fault		0~3		0
	FF.06 Fault history 1 (Last One)		Same as FF.00		Same as FF.00
	FF.07 Fault history 2		Same as FF.00		Same as FF.00

Memorize the types of the latest 3 faults (See “section 7 *Fault information and trouble shooting*” for the details of faults), and records the output frequency, reference frequency, output current, DC bus voltage and running status of the latest fault for troubleshooting.

Parameter	**FF.08** Total power on time	**Range**	0~65530 h	**Default**	0
	FF.09 Total running time		0~65530 h		0

The total boot time and runtime accumulated automatically.

Parameter	**FF.10** Reserved	**Range**	Reserved	**Default**	Reserved
	FF.11 Software version number of control board		1.00~10.00		1.00
	FF.12 Non-standard version number of software		0~255		0

These two parameters indicate the software version of the product and also the non-standard version, which helps to identify the product.

Parameter	**FF.13** ② Heat sink temperature ③ IGBT temperature	**Range**	-30.0~120.0 °C (-2.0~248.0°F) 0.0~140.0 °C (32.0~284.0 °F)	**Default**	0

Record the real time temperature of the heat sink/IGBT.

Parameter	**FF.14** ② Flux current	**Range**	-200.0~200.0 °C	**Default**	Dependent on drive model
	FF.15 ③ Torque current		-200.0~200.0 °C		

Parameter	**FF.16** ③ Encoder fault code		bit0~bit12	**Default**	NULL

bit0	Rotatory fault
bit8	Encoder direction error fault
bit9	The AB phase disconnection is faulty
bit10	The Z phase is faulty
bit11	Cables to the UVW are faulty
bit12	Stall fault

Parameter	**FF.17** Accumulated kilowatt-hours (Upper 16 bits)	**Range**	(0~9999)*10000 kWh	**Default**	0
	FF.18 Accumulated kilowatt-hours (Low 16 bits)		0~9999 kWh		0 kWh
	FF.20 ③ Thermistor temperature		-100~300.0 °C (-148~572.0 °F)		0.0 °C

6.17 Protection Parameters (FP)

Code	Description	Setting range	Default	Modify	Modbus Address
FP.00	User password	0~9999 0: No password Others: password protection	0: No password	o	--
FP.01	Parameter write-in protection	0: All parameters are allowed modifying 1: Only FP.01 and FP.03 can be modified 2: All parameters aren't allowed read	0: All parameters are allowed modifying	o	--
FP.02	Parameter initialization	0: No operation 1: Clear fault history 2: Restore to defaults	0: No operation	x	--
FP.03	Parameter copy	0: No action 1: Parameters download 2: Parameters upload (except motor's parameters) 3: Parameters upload (all parameters)	0: No action	x	--
FP.04	Parameter upload protection	0: Protection enabled 1: Protection disabled	0: Protection enabled	x	--
FP.05	G/P model selection	0: Type G 1: Type P	0: Type G	x	--
FP.07	User parameters backup	0: Invalid 1: Valid	0: Invalid	x	--
FP.08	User parameters recovery	0: Invalid 1: Valid	0: Invalid	x	--

Parameter	**FP.00** User password	Range	0~9999	Default	0

Any non-zero number can be set as password to activate the protection function. After this operation, password is required to access to Group FP. Otherwise all parameters of Group FP cannot be accessed.

0000: Clear the previous setup user password and disable the password protection function.

Parameter	**FP.01** Parameter write-in protection	Range	0~2	Default	0

Value	Function	Description
0	All parameters are allowed to be modified	
1	Only FP.01 and FP.03 can be modified	In addition to this function code and FP.03, all parameters can be read but cannot be modified.
2	No parameters can be read	In addition to this function code and FP.03, all parameters value is shown as "0000" and cannot be modified, this can prevent irrelevant person to check.

Parameter	**FP.02** Parameter copy	Range	0~2	Default	0

Value	Function	Description
0	No operation	
1	Clear fault history	When FP.02 is set to 1, the fault records of FF.00~FF.07 will be cleared.
2	Restore to default setting	When FP.02 is set to 2, the parameters (except running history and user password) are restored to defaults.

Parameter	**FP.03** Parameter initialization	Range	0~3	Default	0

Value	Function	Description
0	No action	
1	Parameters download	According to the type parameter of the keypad preservation (whether has motor parameters, etc), automatically download to the control board
2	Parameters upload (except motor's parameters)	All parameters will upload to EEPROM of keypad except "Running history record" (Group FF) and "motor parameters" (Group F5).
3	Parameters upload (all parameters)	All parameters will upload to the EEPROM of keypad except "Running history record" (Group FF).

Parameter	**FP.04** Parameter upload protection	**Range**	0~1	**Default**	0

Value	**Function**	**Description**
0	Protection enabled	When the keypad has stored effective parameters, uploading parameters to keypad is invalid and report “copy fault”
1	Protection disabled	The uploading operation will upload the present parameters from the control board to the keypad panel.

Parameter	**FP.05** G/P model selection	**Range**	0~1	**Default**	0

0	Type G
1	Type P

Parameter	**FP.07** User parameters backup	**Range**	0~1	**Default**	0

0	Invalid
1	Valid

With this function, the operator can make backup for the parameters after setup.

Parameter	**FP.08** User parameters recovery	**Range**	0~1	**Default**	0

0	Invalid
1	Valid

With this function, the operator can restore the parameters setup to the backup parameters.

7 Fault information and trouble shooting

7.1 Fault information and solutions.

Once a fault is detected, the NE200/300 series of frequency converter would immediately block PWM output and enter the fault protection state; meanwhile TRIP on the keypad would flash and the digital control area display the fault code. At this point one must identify the cause of failure and its corresponding solutions according to the method suggested in this section, if it does not work, please contact your supplier. The series of frequency converter has 22 kinds of faults, which are shown together with their respective solutions in Table 7-1.

NOTE

A trip code with a sign ③ indicates this trip code is only for NE300.

Table 7-1 Fault diagnosis and it's solutions

Trip code	Trip type	Possible causes	Solutions
Uu1	Bus Under voltage during running	1. Power grid low voltage	1. Check the input power source.
OC1	Over current in Acceleration	1. Acceleration time too short	1. Increase the acceleration time.
		2. Power grid low voltage	2. Check the input power source.
		3. Drive power rating too small	3. Choose drive with higher power rating.
OC2	Over current in Deceleration	1. Deceleration time too short	1. Increase the deceleration time.
		2. Large load inertia	2. Add suitable braking devices.
		3. Drive power rating too small	3. Choose drive with higher power rating.
OC3	Over current at constant-speed	1. Abnormal load mutation	1. Check the load
		2. Power grid low voltage	2. Check the input power source.
		3. Drive power rating too small	3. Choose drive with higher power rating.
		4. Encoder sudden offline in closed-loop vector control	4. Check the encoder and its wiring.
Ou1	Over Voltage in Acceleration	1. Acceleration time too short	1. Increase the acceleration time
		2. Power supply abnormal	2. Check the input power source.
Ou2	Over voltage in deceleration	1. Deceleration time too short	1. Increase the deceleration time
		2. Large load inertia	2. Add suitable braking devices.
Ou3	Over voltage in constant speed	1. Power supply abnormal	1. Check the input power source.
		2. Large load inertia	2. Add suitable braking devices.
GF ③	Ground Fault	1. An output phase has ground fault	1. Check the motor insulation.
			2. Check connection between the drive and the motor.
SC	Load short-circuit	1. Wiring of drive and motor has a phase-to-phase short circuit	1. Check the motor winding resistance.
		2. Drive IGBT module damaged	2. Contact the supplier
OH1	Heat-sink over heat	1. Ambient temperature too high	1. Lower the ambient temperature.
		2. Fan is damaged	2. Change the fan
		3. Fan air duct is blocked	3. Clear the air duct.
OL1	Motor overload	1. Power supply abnormal	1. Check the input power source.
		2. Motor rated current set wrongly	2. Check whether the motor rated current is correctly set up.
		3.The settings of V/F are not correct	3. Adjust the V/F curve and torque boosting performance.
		4. Motor always works with heavy load at low speed.	4. Use specialized electric motor.
		5. Motor blocked to stall or sudden large load change	5. Check whether the motor or the load is blocked to stall or not.
		6. Motor power too low	6. Use motor and drive of suitable power ratings
OL2	Drive overload	1. Low voltage in power grid	1. Check the input power source.
		2. Load too heavy	2. Select bigger power rating drive.
		3. Acceleration too fast	3. Increase the acceleration time
		4. Restart the motor still in turning	4. Avoid restarting when the motor is in rotation.
EF0	Communication fault	1. Baud rate and parity checksum is set incorrect	1. Check communication parameters correct or not.
		2. Communication interrupted for long time	2. Check the interface wiring.
EF1	External terminal fault	1. Faults comes from external control circuit	1. Check the external input

Trip code	Trip type	Possible causes	Solutions
SP1	Input phase loss	1. Input RST have phase loss or imbalance	1. Check input voltage
SPO	Output phase loss	1. There is lack of UVW when output	1. Check U-V-W motor wiring
		2. There is a serious unbalance in output	2. Check the load
EEP	EEPROM error	1. Function code parameter writing error	1. Recover factory defaults
		2. EEPROM damaged	2. Contact the supplier
CCF	Keypad & control board communication interrupted	1. Connection cable between keypad and control panel is broken	1. Check the connection cable between keypad and control panel
bCE	Brake unit fault	1. The braking line or braking pipe is broken	1. Check the brake unit, change the brake wiring.
		2. Brake resistor is too low	2. Choose the suitable braking resistor.
PCE	Parameter copy Error	1. Connection cable between keypad and control board too long leads to interference in parameters transmission	1. Shorten the cable between Keypad and control board to reduce interference.
		2. The downloading parameters do not match the existing parameters in the drive.	2. Before downloading, make sure the parameters match the drive.
IDE	IDE Hall current detection fault	1. The current sensoring or hall device damaged.	1. Contact the supplier
ECE ③	Encoder fault	1. Encoder signal wires are reversed	1. Check whether the encoder signal is correctly connected.
		2. Encoder signal wires damaged.	2. Check whether the encoder wiring is broke.
		3. Encoder damaged.	3. Change the encoder.
		4. Encoder detected motor direction does not match drive direction.	4. Change the encoder direction (F3.16) or alter motor wiring sequence.
LC	Fast current limit fault	1. Load too large or motor blocked to stall	1. Decrease the load and check motor and mechanical part status
		2. Drive power rating too small	2. Choose higher power drive
		3. Drive output circuit loop grounded or SC.	3. Remove the external fault
EF2	Terminal close fault	1. The FWD or REV terminals close and get power on. But drive is set to not allow the restart after power failure recovery.	1. Disconnect the FWD or REV terminal first and then power on the drive.
			2. Close the fault detection function for closed terminal fault (FC.11=0)
PIDE	PID feedback error	1. PID feedback offline	1. Check PID feedback line.
			2. Disable PID feedback detection (F8.24=0.0%)
			3. Increase PID feedback offline detection time (F8.25)
OLP2	Overload pre-alarm error	1. Frequency drive output current is higher than set pre-alarm threshold	1. Disable pre-alarm function(FC.19=0)
			2. Increase pre-alarm threshold value (FC.02)
			3. Increase pre-alarm detection time(FC.03)
InPE	Initial position fault detected of synchronous motor	1. Too low Synchronous motor initial position detection current	1. Increase detection current (F3.32) 2. Synchronous motor initial position detection (F3.31 = 0)
bAe	Brake Release Current error	1. Motor current didn`t reach Brake Release Current Threshold through Current detection time	1. Decrease Brake Release Current Threshold (F7.43)
		2. Connection between drive and motor is lost.	2. Check motor connection
		3. Brake Release Current Threshold is too high	3. Increase Current detection time (F7.44)

7.2 Warning information

Once warning information is detected, the NE200/300 series of frequency converter would immediately enter the warning indicating state and display the warning codes on the LED display. During warning the drive keeps running and returns to previous normal status once the warning is gone. Specific warning information is shown in Table 7-2.

NOTE

A Warning code with a sign ③ indicates this warning code is only for NE300

Table 7-2 Warning codes

Warning code	Type	Description
Uu	Warning of under-voltage	The bus voltage is below the voltage point
OLP2	The pre-warning about overload of drive	Operating current exceeded the converter overload pre-detection level and maintained more than pre-overload detection time
OH2	Heat-sink temperature is high	Temperature in the radiator higher than the OH2 standard
SF3 ③	Function codes setup is not appropriate	Output terminal DO, Y1, Y2 does not simultaneously select No.10 function

7.3 The general fault diagnosis and solutions

Following abnormal situations might happen in using of the drive. Try to make simple analysis according to the instructions as below.

S.N	Abnormality	Possible causes	Countermeasure
1	Keypad LED no display after power on	1. Drive power supply absent	1. Check the input power supply
		2. The keypad or the connecting cable between keypad and control board is damaged	2. Change connecting cable between keypad and control board or change keypad.
		3. The drive is damaged in the internally	3. Contact the supplier
2	Motor does not run after drive given run command	1.The motor is damaged or blocked	1. Replace the electric motor or rule out the mechanical failure.
		2. The anti-reverse function is set and rotation direction conflicts with this setting.	2. Remove “Anti-reverse” setting or change the motor running direction.
		3. The frequency reference signal is zero.	3. Check frequency reference signal.
		4.The wiring of motor has phase loss	4. Check the electric motor wiring.
3	Motor running in reverse	1. The motor wiring sequence is not correct.	1. Alter the sequence of the motor wiring
			2. Adjust the function code F0.18.
4	Motor gets serious vibration	1. Mechanical resonance	1. Adjust the machine
		2.The legs of the machine not stable	2. Adjust the machine legs
		3. Output phases imbalance	3. Check the load.
5	The noise of motor is too loud	1. Lubrication is not good or bearing wear	1. Repair or replace the electric motor.
		2.Switching frequency is too low	2. Increase the switching frequency of the drive

8 Routine Repair and Maintenance

The application environment (such as temperature, humidity, dust and powder, textile fibres, smoke and vibration) may increase the possibilities of drive failure. To reduce the failures and prolong the service life of the drive, it is recommended that periodic maintenance is carried out.

CAUTION

1. Only personnel with professional training can dismantle and replace the drive components.
2. Before inspection and maintenance, please make sure that the power supply to the drive has been shut down for at least ten minutes or the CHARGER indicator is OFF, otherwise there may be risks of electric shock.
3. Do not leave metal components and parts in the drive, or it may damage the equipment.

8.1 Routine maintenance

The drive shall be used under the allowable conditions as recommended in this manual and its routine maintenance shall be conducted as per the table below.

Item	Inspection contents	Inspection method	Inspection criteria
Operating Environment	Environment Temperature	Thermometer	-10 ~ +40 ºC De-rating at 40 to 50 ºC, and the rated output current shall be decreased by 1 % for every temperature rise of 1 ºC.
	Humidity	Hygroscope	5 ~ 95 %, no condensing
	Dust, oil, and water drop	Visual check	There are no dust, oil, and water drop.
	Vibration	Special test instrument	3.5 mm, 2~9 Hz; 10 m/s^2, 9~200 Hz; 15 m/s^2, 200~500 Hz
	Gas	Special test instrument, smell and visual check	
Drive	Overheat	Thermometer or thermocouple	Exhaust normal
	Sound	Listen	There is no abnormal sound.
	Gas	Special test instrument	There are no abnormal smell and smoke.
	Physical appearance	Visual check	The physical appearance is kept intact.
	Heat-sink fan ventilation	Visual check	There are no fouling and wool that block the air duct.
	Input current	Ampere meter	In the allowable operating range. Refer to the nameplate.
	Input voltage	Voltmeter	In the allowable operating range. Refer to the nameplate.
	Output current	Ampere meter	In the rated value range. It can be overloaded for a short while.
	Output voltage	Voltmeter	In the rated value range.
Motor	Overheat	Thermometer or thermocouple	There are no overheat fault and burning smell.
	Sound	Listen	There is no abnormal sound.
	Vibration	Vibration tester	There is no abnormal oscillation.

8.2 Periodic maintenance

It is recommended to perform periodic inspection on the drive once every three to six months according to the application environment and work conditions.

Item	Inspection content	Inspection criteria
Drive	Main circuit terminal	The screws are tightened and the cables are kept well.
	PE terminal	
	Control circuit terminal	
	Internal wiring and connectors	Connection is firm and reliable.
	Expansion card connector	
	Mounting screws	The screws are tightened.
	Cleaning the dusts and powders	There are no dust or other contamination.
	Internal foreign objects	There are no foreign objects.
Motor	Insulation test	Normal

8.3 Component replacement

Different types of components have different service span. The service spans of the components are subject to the environment and application conditions. Better working environment may prolong the service lives of the components. The cooling fan and electrolytic capacitor are vulnerable components and it is recommended that routine inspection as per the table below.

Vulnerable parts	Damage causes	Solutions	Items for routine inspection
Fan	Bearing wear, blade aging	Change	The fan blade has no cracks and rotates normally. The screws are tightened.
Electrolytic capacitor	Ambient temperature is relatively high, and electrolyte dries out.	Change	There is no electrolyte leakage, color change, crack and shell deformation. The safety valve is normal. Static capacity = initial value*0.85.

CAUTION

NOTE

When the drive is stored for a long period of time, power on test shall be conducted once within two years and last at least five hours. Use voltage regulator to gradually increase the voltage to the rated value when power connection is performed.

Warranty

The warranty period is 5 years (from date of shipping), during which the company would offer free repair or replacement if the fault or damage occurred under normal use.

The warranty can be invalidated due to fault caused by the following reasons.

1. The fault is caused by not following the operation manual or exceeding the operating standards.
2. The fault is caused by repairing or modifying the drive without permission.
3. The fault is caused by using the drive in a wrong way, such as wiring mistakes.
4. The fault is caused by fire, salt corrosion, gas corrosion, earthquake, storms, floods, lightning, abnormal voltage, or other external causes.

9 Technical data and model selection

9.1 Technical features

		NE200			NE300		
Control features	Control mode	Closed-loop vector (VC)	Open-loop vector (SVC)	V/F control	Closed-loop vector (VC)	Open-loop vector (SVC)	V/F control
	Startup torque		0.5 Hz 150 %	1.5 Hz 150 %	0.00 Hz 180 %	0.5 Hz 150 %	1.5 Hz 150 %
	Speed adjust range		1:100	1:50	1:1000	1:100	1:50
	Speed stabilization precision		±0.2 %	±0.5 %	±0.02 %	±0.2 %	±0.5 %
	Torque Control		Y	N	Y	Y	N
	Torque precision		±10 %		±5 %	±10 %	
	Torque response time		<20 ms		<10 ms	<20 ms	
	Key Function				Length control; Drooping control S curve Acc./Dec; Autotuning; Torque tracking		
		Switching Torque/ Speed control mode; Multi-function I/O terminals Undervoltage adjustment; Torque limit; Multi-steps operation Flying start, Slip compensation; Rich PID; Simple PLC (On board) Manual/ auto torque boost; Current limitation; AVR Function. AC operation grounding switching					
	Freq. setting mode				Terminal pulse input (X4, X5)		
		Keypad, terminal up/down, communication (host), analog input AI1 AI2					
	Output Freq.	0.0~550.0 Hz					
	Starting frequency	0.0:60.00 Hz					
	Acc./Dec. time	0.01~3600 s			0.1~3600 s		
	Dynamic braking	400 V Braking unit action voltage 650~750 V 200 V Braking unit action voltage 360~390 V					
	DC braking	DC braking activation frequency:0.00~550.0 Hz; DC braking current: G type 0.0~100.0 %; P type 0.0~80.0 % DC braking time:0.0~30.0 s; Quick DC brake activation without lag time					
	Magnetic flux braking	Decelerating quickly by adding motor magnetic flux					
Unique functions	Multi-function key (MFK)	MFK can exchange operations quickly. Such as JOG, FWD/REV switch, Running command reference modes etc.					
	Parameter copy	Parameter upload & download via keypad User can forbid the overwriting of the uploaded parameters.					
	Common DC bus				Yes		
	Independent air duct				Yes		
	Option card				Various Option cards including I/O Expansion card, injection molding interface card, ± 10 V analog Option card, etc.		
	Power-on detection				Automatic detection of internal and peripheral ciruits while power-on		
Communication	Rs485 protocol	Equipped with Modbus-RTU communication protocol					
Protections	Protections for:	Phase-to-phase short circuit, Auto-tune failure, Output-to-ground short circuit, Parameter copy error, Option card connection error, Communication error, Power supply abnormal, IGBT protection, Temperature sampling abnormal, Output phase lost, Power supply under/over-voltage, External devices faults, Analog input/output abnormal, Temperature sampling offline, Drives/mot or overload, Abnormal power failure in running, Over-current, Under/over voltage, Relay contact error Encoder off-line, Heat sink over-heat, EEPROM abnormal					
Efficiency					Used as rated power: 7.5 kW and below ratings ≥93 %, 11 kW~45 kW ratings ≥95 %, 55 kW and above ratings ≥98 %		
Environment	Application Environment	In-door, free from direct sunlight, dust, corrosive gas, combustible gas, oil mist, steam, water drop or salt					
	Ambient temperature	-10 ~ +40 ºC, derated at 40 ~ 50 ºC, the rated output current shall be decreased by 1 % for every temperature rise of 1 ºC					
	Humidity	5~95 %,no condensing					
	Vibration	3.5 mm, 2~9 Hz; 10 m/s^2, 9~200 Hz; 15 m/s^2, 200~500 Hz					
	Altitude	0~2000 m; Derating use above 1000 m; Derate 1 % every 100 m higher.					
	Storage temperature	-40~ +70 ºC					

9.2 NE200 Technical data

NE200-4T****GB Three-phase 400 V Constant torque/heavy-duty application

Power (kW)		**0.75**	**1.5**	**2.2**	**4.0**
Adapted motor (kW)		0.75	1.5	2.2	4.0
Output	Voltage (V)	3 phase 0~rated input voltage			
	Rated current (A)	2.5	4.0	6.0	9.0
	Overload	150 % 1 min; 180 % 20 sec			
Input	Rated Volt / Freq	3 phase 380 V/440 V; 50 Hz/60 Hz			
	Voltage range	304 V~456 V; voltage imbalance ≤3 %; Allowable frequency fluctuation ±5 %			
	Rated current (A)	3.7	5.4	7.0	10.7
Braking unit		Standard (Built in)			
IP rating		IP20			
Cooling		Forced air cooling			

NE200-4T****PB Three-phase 400 V Squared torque/normal-duty application

Power (kW)		**1.5**	**2.2**	**4.0**	**5.5**
Adapted motor (kW)		1.5	2.2	4.0	5.5
Output	Voltage (V)	3 phase 0~rated input voltage			
	Rated current (A)	4.0	6.0	9.0	13
	Overload	120 % 1 min; 150 % 1 sec			
Input	Rated Volt / Freq	3 phase 380 V/440 V; 50 Hz/60 Hz			
	Voltage range	304 V~456 V; voltage imbalance ≤3 %; Allowable frequency fluctuation ±5 %			
	Rated current (A)	5.4	7.0	10.7	15.5
Braking unit		Standard (Built in)			
IP rating		IP20			
Cooling		Forced air cooling			

NE200-2S****GB Single-phase 220 V constant torque/heavy duty application

Power (kW)		**0.4**	**0.75**	**1.5**	**2.2**
Adapted motor (kW)		0.4	0.75	1.5	2.2
Output	Voltage (V)	Single phase 0~rated input voltage			
	Rated current (A)	2.5	4.5	7.0	10
	Overload	150 % 1 min; 180 % 20 sec			
Input	Rated Volt / Freq	1 phase 200 V/240 V; 50 Hz/60 Hz			
	Voltage range	176 V~264 V; voltage imbalance ≤3 %; Allowable frequency fluctuation ±5 %			
	Rated current (A)	5.3	8.3	14	23
Braking unit		Standard (Built in)			
IP rating		IP20			
Cooling		Forced air cooling			

9.3 NE300 Technical data

Table 9-1 NE300-2T**GB Three-phase 220 V Constant torque/heavy-duty application**

Power (kW)		0.75	1.5	2.2	4.0	5.5	7.5	11	15	18.5	22	37	45
Adapted motor (kW)		0.75	1.5	2.2	4.0	5.5	7.5	11	15	18.5	22	37	45
Output	Voltage (V)	3 Phase 0~Rated input voltage											
	Rated current (A)	4.0	9.0	13	17	25	32	45	60	75	90	150	176
	Overload	150 % 1 min; 180 % 20 sec											
Input	Rated Volt / Freq	3 Phase 200 V/220 V; 50 Hz/60 Hz											
	Voltage range	176 V~264 V; voltage imbalance ≤3 %; Allowable frequency fluctuation ±5 %											
	Rated current (A)	5.4	10.7	15	20.5	27	35	46.5	62	76	92	157	180
Braking unit		Built-in as standard								Need external			
IP rating		IP20											
Cooling		Forced air cooling											

Table 9-2 NE300-4T**GB Three-phase 400 V Constant torque/heavy duty application**

Power (kW)		**1.5**	**2.2**	**4.0**	**5.5**	**7.5**	**11**	**15**	**18.5**	**22**	**30**	**37**	**45**	**55**	**75**	**90**	**110**
Adapted motor (kW)		1.5	2.2	4.0	5.5	7.5	11	15	18.5	22	30	37	45	55	75	90	110
Output	Voltage (V)	3 Phase 0~Rated input voltage															
	Rated current (A)	4	6	9	13	17	25	32	37	45	60	75	90	110	150	176	210
	Overload	150 % 1 min; 180 % 20 sec															
Input	Rated Volt / Freq	3 Phase 380 V/440 V; 50 Hz/60 Hz															
	Voltage range	304 V~456 V Voltage imbalance ≤3 %; Allowable frequency fluctuation ±5 %															
	Rated current (A)	5.4	7.0	10.7	15	20.5	27	35	38.5	46.5	62	76	92	113	157	180	214
Braking unit		Built-in									Built-out						
IP rating		IP20															
Cooling		Forced air cooling															
Power (kW)		**132**	**160**	**185**	**200**	**220**	**250**	**280**	**315**	**355**	**400**	**450**	**500**	**560**	**630**	**710**	**800**
Adapted motor (kW)		132	160	185	200	220	250	280	315	355	400	450	500	560	630	710	800
Output	Voltage (V)	3 Phase 0~Rated input voltage															
	Rated current (A)	250	300	340	380	420	470	540	600	660	730	840	900	950	1160	1300	1460
	Overload	150 % 1 min; 180 % 20 sec															
Input	Rated Volt / Freq	3 Phase 380 V/440 V; 50 Hz/60 Hz															
	Voltage range	304 V~456 V; Voltage imbalance ≤3%; Allowable frequency fluctuation ±5 %															
	Rated current (A)	256	307*	345*	385*	430*	480*	548*	610*	670*	740*	850*	910*	960*	1170*	1310*	1470*
Braking unit		Built-out															
IP rating		IP20															
Cooling		Forced air cooling															

* NE300-4T1600G-F and above products are equipped with in-built DC reactor as standard.

Table 9-3 NE300-4T**PB Three-phase 400 V Squared torque/Normal Duty**

Power (kW)		**2.2**	**4.0**	**5.5**	**7.5**	**11**	**15**	**18.5**	**22**	**30**	**37**	**45**	**55**	**75**	**90**	**110**	**132**
Adapted motor (kW)		2.2	4.0	4.5	7.5	11	15	18.5	22	30	37	45	55	75	90	110	132
Output	Voltage (V)	3 Phase 0~Rated input voltage															
	Rated current (A)	6.0	9.0	13	17	25	32	37	45	60	75	90	110	150	176	210	250
	Overload	120 % 1 min; 150 % 1 sec															
Input	Rated Volt / Freq	3 Phase 380 V/440 V; 50 Hz/60 Hz															
	Voltage range	304 V~456 V Voltage imbalance ≤3 %; Allowable frequency fluctuation ±5 %															
	Rated current (A)	7.0	10.7	15.5	20.5	26	35	38.5	46.5	62	76	92	113	157	180	214	256
Braking unit		Built-in									Built-out						
IP rating		IP20															
Cooling		Forced air cooling															
Power (kW)		**160**	**185**	**200**	**220**	**250**	**280**	**315**	**355**	**400**	**450**	**500**	**560**	**630**	**710**	**800**	**900**
Adapted motor (kW)		160	185	200	220	250	280	315	355	400	450	500	560	630	710	800	900
Output	Voltage (V)	3 Phase 0~Rated input voltage															
	Rated current (A)	300	340	380	420	470	540	600	660	730	840	900	950	1160	1300	1460	1640
	Overload	120 % 1 min; 150 % 1 sec															
Input	Rated Volt / Freq	3 Phase 380 V/440 V; 50 Hz/60 Hz															
	Voltage range	304 V~456 V; Voltage imbalance ≤3%; Allowable frequency fluctuation ±5 %															
	Rated current (A)	307	345*	385*	430*	480*	548*	610*	670*	740*	850*	910*	960*	1170*	1310*	1470*	1650*
Braking unit		Built-out															
IP rating		IP20															
Cooling		Forced air cooling															

* NE300-4T1850P and above products are equipped with external DC reactor as standard.

9.4 Product Dimensions and weight

9.4.1 NE200 dimension and weight

- Length unit: (mm / in) Weight unit: (Kg / lb)
- Data in () is the dimensions and weight with package.
- NE200 drivers can be mounted on 35 mm din-rail.

Figure 9-1 Dimension diagram

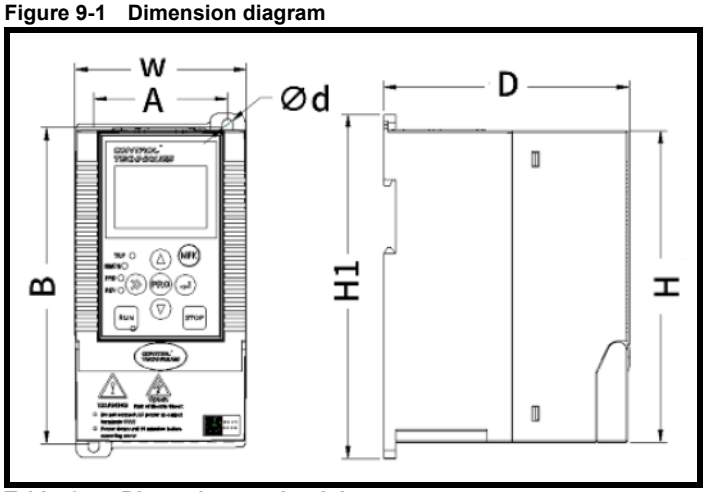

Table 9-4 Dimensions and weight

Model (NE200-)	H		W		D		H1		A		B		d		Net weight	
	mm	*in*	mm	*in*	mm	*in*	mm	*in*	mm	*in*	mm	*in*	mm	*in*	kg	*lb*
2S0004GB	150	*5.91*	83 (125)	*3.27 (4.92)*	120 (160)	*4.72 (6.30)*	166 (190)	*6.54 (7.48)*	65	*2.56*	153	*6.02*	5	*0.20*	1 (1.1)	*2.20 (2.43)*
2S0007GB																
2S0015GB																
4T0007G/0015PB																
4T0015G/0022PB																
4T0022GB-M																
2S0022GB	200	*7.87*	120 (166)	*4.72 (6.54)*	140 (189)	*5.51 (7.44)*	215 (244)	*8.46 (9.61)*	98	*3.86*	202	*7.95*	5	*0.20*	1.8 (2.1)	*3.97 (4.63)*
4T0022G/0040PB																
4T0040G/0055PB																

9.4.2 NE300 dimensions and weight

* -F means stand-free cabinet with reactor built-in;

* -U means input terminal is at up end, output terminal is at down end, the mounting method is surface-mounting.

* -D means the input/output terminal are at same side, the mounting method is surface-mounting.

9.4.2.1 NE300-4T0015G/0022PB to 4T2500G/2800P-D

- Length unit: (mm / in) Weight unit: (Kg / lb)
- Data in () is the dimensions and weight with package.
- Figure 9-2 is the diagram, the detail feature for all drive is different.

Figure 9-2 Dimension diagram

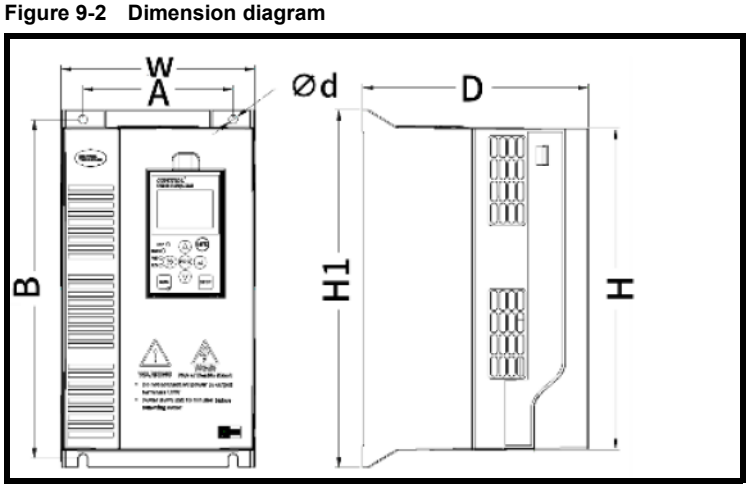

Table 9-2 Dimensions and weight

Model (NE300-)	H		W		D		H1		A		B		d		Net weight	
	mm	*in*	mm	*in*	mm	*in*	mm	*in*	mm	*in*	mm	*in*	mm	*in*	kg	*lb*
2T0007G	210	*8.27*	133 (180)	*5.24 (7.09)*	180 (205)	*7.09 (8.09)*	238 (255)	*9.37 (10.04)*	108	*4.25*	225	*8.86*	7	*0.28*	2.5 (2.8)	*5.5 (6.17)*
2T0015G 2T0022G 2T0040G	258	*10.16*	155 (255)	*6.10 (10.04)*	180 (255)	*7.09 (8.09)*	285 (330)	*11.22 (12.99)*	120	*4.72*	270	*10.63*	7	*0.28*	3.2 (4.1)	*7.05 (9.04)*
2T0075G 2T0110G	308	*12.13*	192 (275)	*7.56 (10.83)*	186 (275)	*7.32 (10.83)*	340 (435)	*13.39 (17.13)*	150	*5.91*	323	*12.72*	7	*0.28*	4.8 (6.0)	*10.58 (13.23)*
2T0150G 2T0185G	425	*16.73*	270 (345)	*10.63 (13.59)*	200 (280)	*7.87 (11.02)*	450 (530)	*17.72 (20.87)*	200	*7.87*	430	*16.93*	7	*0.28*	13.5 (15.5)	*29.76 (34.17)*
2T0220G	535	*21.06*	320 (460)	*12.60 (13.59)*	248 (440)	*9.76 (17.32)*	560 (655)	*22.05 (25.79)*	240	*9.45*	540	*21.26*	9	*0.35*	26 (37)	*57.32 (81.57)*
2T0370G 2T0450G	640	*25.20*	380 (470)	*14.96 (18.50)*	248 (500)	*9.76 (17.32)*	665 (760)	*26.18 (29.92)*	240	*9.45*	640	*25.20*	9	*0.35*	42 (56)	*92.59 (123.46)*
4T0015G/0022PB 4T0022G/0040PB 4T0040G/0055PB	210	*8.27*	133 (180)	*5.24 (7.09)*	180 (205)	*7.09 (8.09)*	238 (255)	*9.37 (10.04)*	108	*4.25*	225	*8.86*	7	*0.28*	2.3 (2.8)	*5.07 (6.17)*
4T0055G/0075PB 4T0075G/0110PB 4T0110G/0150PB	258	*10.16*	155 (255)	*6.10 (10.04)*	180 (255)	*7.09 (8.09)*	285 (330)	*11.22 (12.99)*	120	*4.72*	270	*10.63*	7	*0.28*	3.2 (4.1)	*7.05 (9.04)*
4T0150G/0185PB 4T0185G/0220PB 4T0220G/0300PB	308	*12.13*	192 (275)	*7.56 (10.83)*	186 (275)	*7.32 (10.83)*	340 (435)	*13.39 (17.13)*	150	*5.91*	323	*12.72*	7	*0.28*	4.8 (6.0)	*10.58 (13.23)*
4T0300G/0370P 4T0370G/0450P	425	*16.73*	270 (345)	*10.63 (13.59)*	200 (280)	*7.87 (11.02)*	450 (530)	*17.72 (20.87)*	200	*7.87*	430	*16.93*	7	*0.28*	13.5 (15.5)	*29.76 (34.17)*
4T0450G/0550P 4T0550G/0750P	535	*21.06*	320 (345)	*12.60 (13.59)*	248 (440)	*9.76 (17.32)*	560 (655)	*22.05 (25.79)*	240	*9.45*	540	*21.26*	9	*0.35*	26 (37)	*57.32 (81.57)*
4T0750G/0900P 4T0900G/1100P 4T1100G/1320P	640	*25.20*	380 (470)	*14.96 (18.50)*	248 (500)	*9.76 (19.68)*	665 (760)	*26.18 (29.92)*	240	*9.45*	640	*25.20*	9	*0.35*	42 (56)	*92.59 (123.46)*
4T1320G/1600P-U 4T1320G/1600P-D 4T1600G/1850P-U 4T1600G/1850P-D	710	*27.95*	465 (576)	*18.31 (22.68)*	355 (576)	*13.98 (22.68)*	750 (842)	*29.53 (33.15)*	380	*14.96*	719	*28.31*	11	*0.43*	64 (82)	*141.10 (180.78)*
4T1850G/2000P-U 4T1850G/2000P-D 4T2000G/2200P-U 4T2000G/2200P-D 4T2200G/2500P-U 4T2200G/2500P-D 4T2500G/2800P-U 4T2500G/2800P-D	859	*33.82*	550 (662)	*21.65 (26.06)*	385 (492)	*15.16 (19.37)*	900 (974)	*35.43 (38.35)*	440	*17.32*	868	*34.17*	11	*0.43*	89.5 (110)	*197.31 (242.51)*

9.4.2.2 NE300-4T1600G/1850P-F to 4T3150G/3550P-F

- Length unit: (mm / in) Weight unit: (Kg / lb)
- Data in () is the dimensions and weight with package.

Figure 9-3 Dimensions diagram

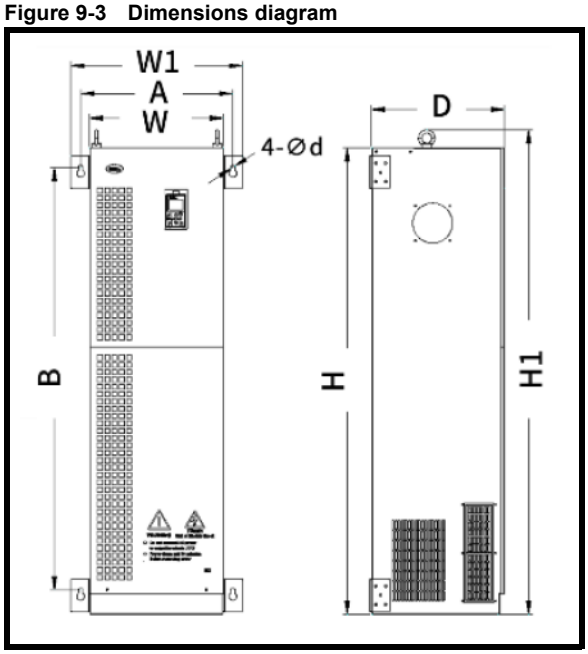

Table 9-3 Dimensions and weight

Model (NE300-)	H		W		W1		D		H1		A		B		d		Weight	
	mm	*in*	mm	*in*	mm	*in*	mm	*in*	mm	*in*	mm	*in*	mm	*in*	mm	*in*	kg	*lb*
4T1600G/1850P-F	1400	*55.12*	400 (690)	*15.75 (27.17)*	520	*20.47*	*402 (546)*	*15.83 (21.50)*	1455 (1542)	*57.28 (60.71)*	460	*18.11*	1270	*50*	13	*0.51*	118 (148)	*260.15 (326.28)*
4T1850G/2000P-F																		
4T2000G/2200P-F																		
4T2200G/2500P-F																		
4T2500G/2800P-F	1600	*62.99*	505 (723)	*19.88 (28.46)*	620	*24.41*	420 (646)	*16.54 (25.43)*	1655 (1742)	*65.16 (68.58)*	560	*22.05*	1460	57.48	13	*0.51*	175 (210)	*385.81 (462.97)*
4T2800G/3150P-F																		
4T3150G/3550P-F																		

9.4.2.3 NE300-4T3550G/4000P-F to 4T5000G/5600P-F

- Length unit: (mm / in) Weight unit: (Kg / lb)
- Data in () is the dimensions and weight with package.

Figure 9-4 Dimensions diagram

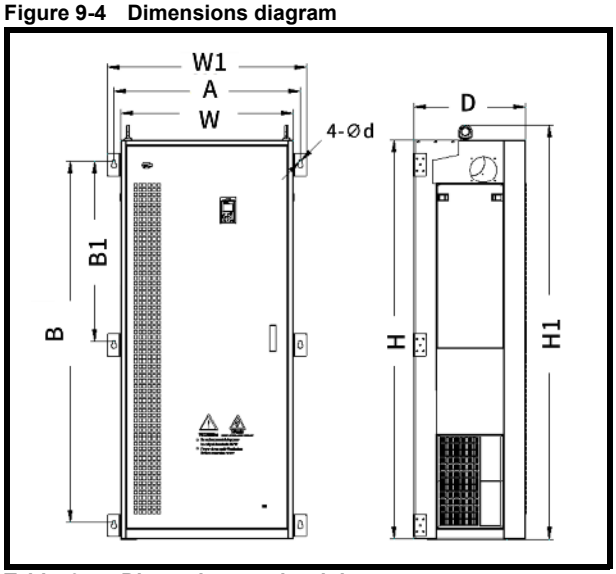

Table 9-4 Dimensions and weight

Model (NE300-)	H		W		W1		D		H1		A		B		B1		d		Weight	
	mm	*in*	mm	*in*	mm	*in*	mm	*in*	mm	*in*	mm	*in*	mm	*in*	mm	*in*	mm	*in*	kg	*lb*
4T3550G/4000P-F	1800	*70.87*	780 (824)	*30.71 (32.44)*	900	*35.43*	*500 (926)*	*19.69 (36.46)*	1870 (1942)	*73.62 (76.46)*	840	*33.07*	1630	*64.17*	815	*32.09*	13	*0.51*	235 (283)	*518.09 (623.91)*
4T4000G/4500P-F																				
4T4500G/5000P-F																				
4T5000G/5600P-F																				

9.4.2.4 NE300-4T5600G/6300P-F to 4T8000G/9000P-F

- Length unit: (mm / in) Weight unit: (Kg / lb)
- Data in () is the dimensions and weight with package.

Figure 9-5 Dimensions diagram

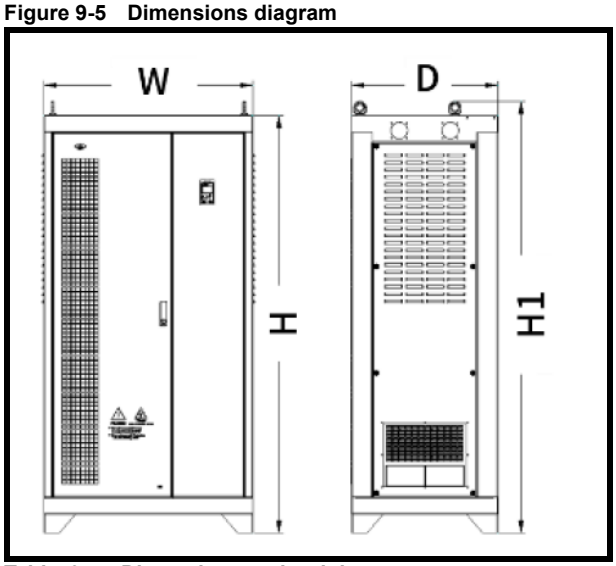

Table 9-5 Dimensions and weight

Model (NE300-)	H		W		D		H1		Weight	
	mm	*in*	mm	*in*	mm	*in*	mm	*in*	kg	*lb*
4T5600G/6300P-F	2000	*78.74*	1000 (1128)	*39.37 (44.41)*	700 (1008)	*27.56 (39.69)*	*2070 (2124)*	*81.50 (83.62)*		
4T6300G/7100P-F										
4T7100G/8000P-F									(600)	*1322.77*
4T8000G/9000P-F										
4T9000G-F	See NE300-4T9000G-F									

9.4.2.5 NE300-4T9000G-F

- Length unit:(mm/in) Weight unit: (kg/lb)
- NE300-4T9000G-F consist of 2 NE300-4T5000G-F drivers.
- Assembly space S≥300 mm /11.81 in, Assembly width W2 ≥1860 mm /73.23 in.
- Dimensions with package:2124 mm / 83.62 in X 1128 mm / 44.41 in X 1008 mm / 39.69 in, weight with package 600 kg / 1322.77 lb.

Figure 9-6 Dimensions diagram

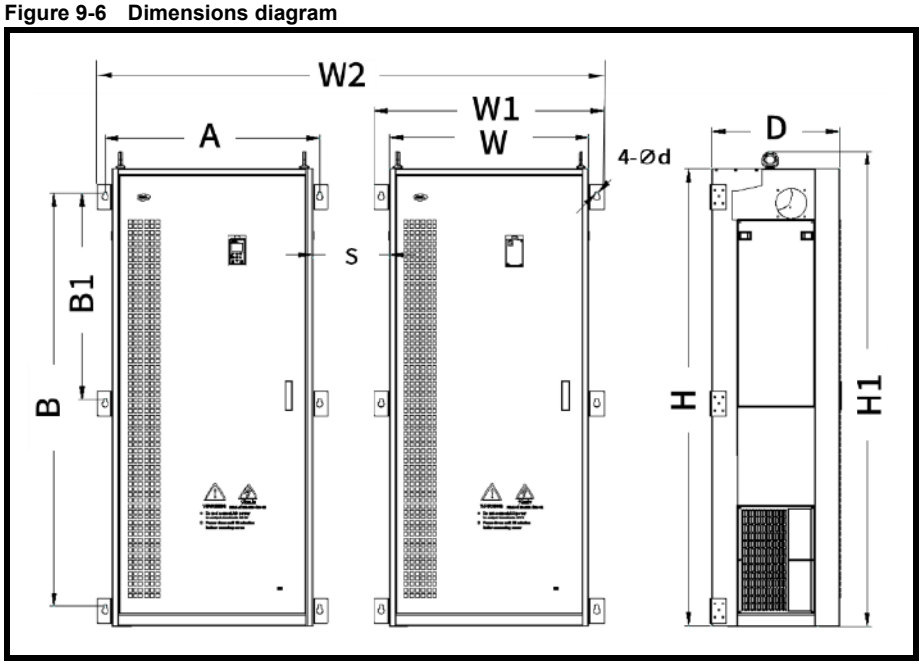

9.5 Keypad

9.5.1 Keypad dimension/mounting

- Length unit (mm/in) weight unit (kg/lb)
- LCD and LED keypads dimensions are same.

Figure 9-7 LED Operating Panel Outline and Mounting Dimension

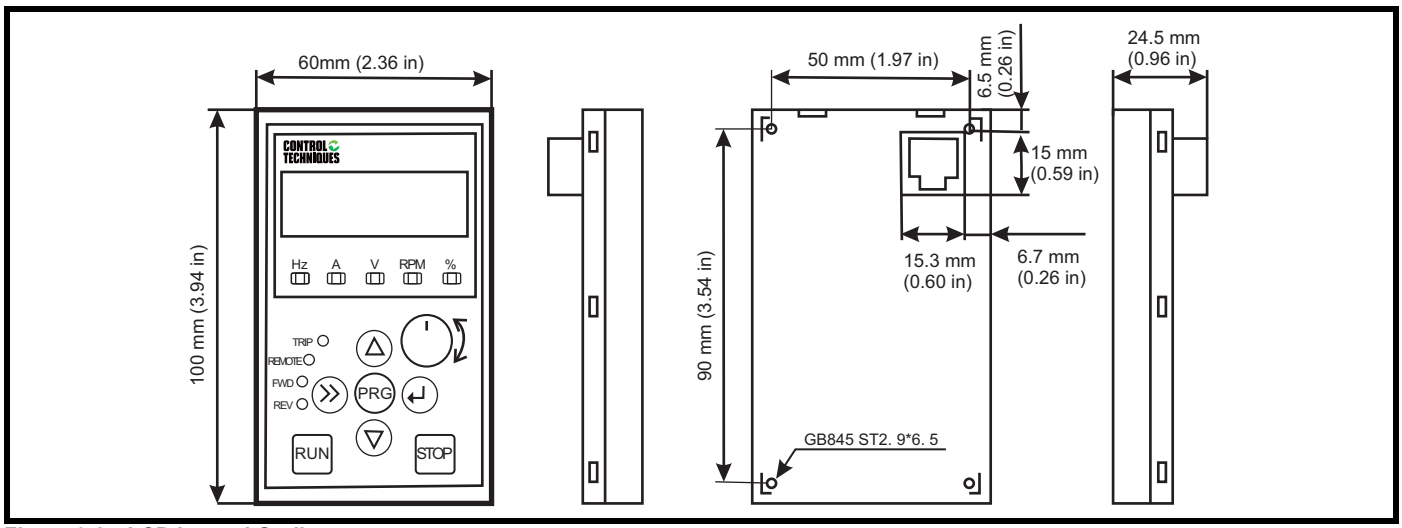

Figure 9-8 LCD keypad Outline

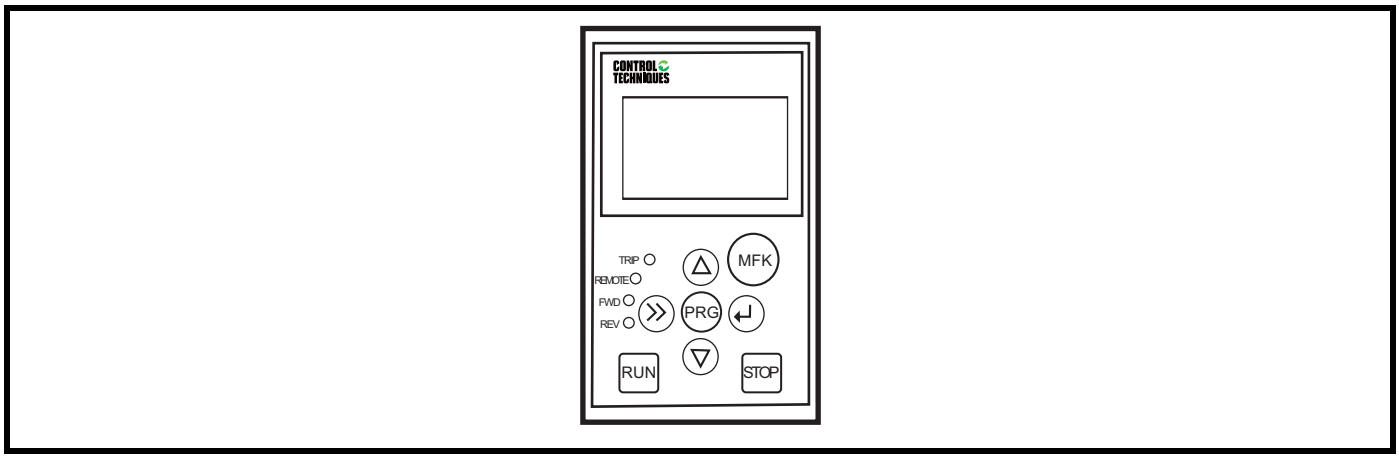

Figure 9-9 Operating Panel Outline and Mounting Dimension

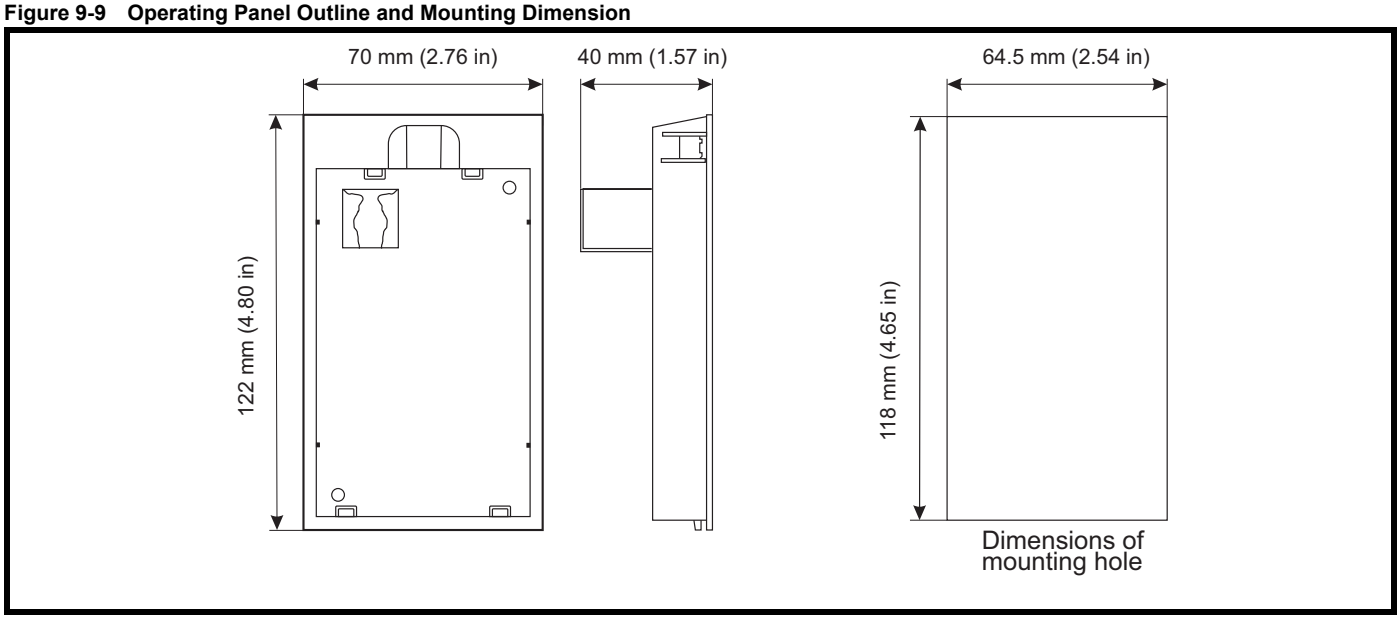

9.6 Braking Resistor and Unit

9.6.1 Braking torque (T_B)

In general, when the motor is braked, there is heat-loss inside the motor, and the resultant brake torque is about 20 % of the rated torque of the motor. Therefore, if the calculated brake electromagnetic torque is less than 20 % of the rated torque of the motor, it indicates that there is no need to connect external brake device.

Please use the following formula to calculate the electromagnetic torque required for braking:

$$T_B = \frac{(GD_M^2 + GD_L^2)(N_1 - N_2)}{375 t_s} T_L$$

T_B: Brake electromagnetic torque (Nm)

GD_M^2: Rotational inertia of the motor (Nm^2)

GD_L^2: Rotational inertia converted from motor load side to motor side (Nm^2)

T_L:Load resistance torque (Nm)

N_1: Motor speed before braking (rpm)

N_2:Motor speed before braking (rpm)

t_s: Deceleration time (s)

9.6.2 Braking Resistor Resistance (R_B)

During the operation of the braking unit, the voltage rise and fall of the DC bus depends on the constant RC, R is the resistance value of the braking resistance, and C is the capacity of the electrolytic capacitance of the converter. From the charge discharge curve, we know that the smaller the RC is, the faster the discharge speed of the bus voltage is. The smaller the R is, the faster the discharge speed of the bus voltage is when the C is kept constant (the model of the converter is determined). The resistance value of braking resistance can be calculated by the following formula.

$$R_B = \frac{U_C^2}{0.1047\,(T_B - 0.2T_M)N_1} \text{ (W)}$$

U_C: Action voltage value of braking unit, in general, it is 710 V
T_M: Rated torque of motor (Nm)
R_B can meet all kind of deceleration work status while N_2=0

9.6.3 Nominal power of brake resistor (P_R)

Because the brake resistor is a short-time working system, i.e. the time of each power on is very short, during the power on period, the temperature rise of the resistor is far from stable, but the instantaneous power is very high; the interval time after each power on is long, and the temperature is falling continuously in this period of time, so the resistance finally reaches a stable temperature rise, generally 80-100 ^oC Therefore, according to the characteristics and technical indicators of the resistor, we know that the nominal power (rated power) of the resistor will be less than the power consumption when it is powered on. Generally, the following formula can be used:

$$PR = a \times PS \times ED \quad \text{(W)}$$

PR: Nominal power of brake resistor (W)
PS: Average power consumption during braking (W)
ED: Braking utilization rate, recommend 10 % at here
a: Derating coefficient of braking resistance, generally, it is 1.5~2 or find it from derating curve of resistance and can calculate PS from formula.

9.6.4 Braking Unit Current (I_c)

When selecting the brake unit, the maximum instantaneous current flowing when the brake unit works is less than the rated current of the device, which is the only basis for selection. By calculating the maximum current value, the appropriate brake unit can be selected. The calculation formula is as follows:

$$I_C = \frac{U_C}{R_B} \text{ (A)}$$

U_C: DC-BUS voltage of braking unit, generally, it is 800 V
R_B: Braking resistor resistance (Ω)
I_C: Instantaneous current of braking (A)
Generally, the hardware over-voltage protection value is 760 V.
Considering its action lag, it should be increased appropriately. But generally, it will not exceed 800 V, so U_C is appropriately increased in the calculation of I_C.

9.6.5 Reference table of brake resistance selection

Model	Braking rate	Braking torque	Applicable brake unit model	Single parallel	Resistance power (kW)	Resistance (Ω)
NE200-4T0007G/0015PB	10 %	150 %	Built-in braking unit	-	0.075	600
	20 %				0.15	600
	30 %				0.25	600
	40 %				0.3	600
	50 %				0.4	600
NE200-4T0015G/0022PB NE300-4T0015G/0022PB	10 %	150 %	Built-in braking unit	-	0.15	300
	20 %				0.3	300
	30 %				0.45	300
	40 %				0.6	300
	50 %				0.8	300
NE200-4T0022G/0040PB NE300-4T0022G/0040PB	10 %	150 %	Built-in braking unit	-	0.25	200
	20 %				0.45	200
	30 %				0.7	200
	40 %				0.9	200
	50 %				1.1	200
NE200-4T0040G/0055PB NE300-4T0040G/0055PB	10 %	150 %	Built-in braking unit	-	0.4	120
	20 %				0.8	120
	30 %				1.1	120
	40 %				1.5	120
	50 %				1.85	120
NE300-4T0055G/0075PB	10 %	150 %	Built-in braking unit	-	0.6	80
	20 %				1.1	80
	30 %				1.65	80
	40 %				2.2	80
	50 %				2.75	80
NE300-4T0075G/0110PB	10 %	100 %	Built-in braking unit	-	1	89
	20 %	120 %			2	73
	30 %	130 %			3	68
	40 %	140 %			3	63
	50 %	150 %			4	60
NE300-4T0110G/0150PB	10 %	100 %	Built-in braking unit	-	1	61
	20 %	120 %			2	51
	30 %	130 %			3	47
	40 %	140 %			4	43
	50 %	150 %			6	41
NE300-4T0150G/0185PB	10 %	100 %	Built-in braking unit	-	2	45
	20 %	120 %			3	37
	30 %	130 %			5	34
	40 %	140 %			6	32
	50 %	150 %			8	30
NE300-4T0185G/0220PB	10 %	100 %	Built-in braking unit	-	2	36
	20 %	120 %			4	30
	30 %	130 %			6	28
	40 %	140 %			8	26
	50 %	150 %			10	24
NE300-4T0220G/0300PB	10 %	100 %	Built-in braking unit	-	2.2	30
	20 %	120 %			4.5	25
	30 %	130 %			6.6	23
	40 %	140 %			9	22
	50 %	150 %			11	20
NE300-4T0300G/0370P	10 %	100 %	CTB-4X02-0550	Single	3	22
	20 %	120 %			6	18.6
	30 %	130 %			9	17.2
	40 %				12	17.2
	50 %				15	17.2

Model	Braking rate	Braking torque	Applicable brake unit model	Single parallel	Resistance power (kW)	Resistance (Ω)
NE300-4T0370G/0450P	10 %	100 %	CTB-4X02-0550	Single	4	18.1
	20 %	120 %			8	15.1
	30 %	130 %			11	13.9
	40 %				15	13.9
	50 %				20	13.9
NE300-4T0450G/0550P	10 %	100 %	CTB-4X02-0550	Single	5	14.9
	20 %	120 %			9	12.4
	30 %	130 %			14	11.5
	40 %		CTB-4X02-0750		18	11.5
	50 %				23	11.5
NE300-4T0550G/0750P	10 %	100 %	CTB-4X02-0550	Single	6	12.2
	20 %	120 %			11	10.2
	30 %	130 %	CTB-4X02-0750		17	9.4
	40 %	130 %			22	9.4
	50 %	130 %			28	9.4
NE300-4T0750G/0900P	10 %	100 %	CTB-4X02-0750	Single	8	8.9
	20 %	120 %			15	7.4
	30 %	130 %	CTB-4X03-1100		23	6.9
	40 %				30	6.9
	50 %				38	6.9
NE300-4T0900G/1100P	10 %	100 %	CTB-4X02-0750	Single	9	7.4
	20 %	120 %	CTB-4X03-1100		18	6.2
	30 %				27	6.2
	40 %				36	6.2
	50 %	130 %			45	5.7
NE300-4T1100G/1320P	10 %	100 %	CTB-4X02-0750	Single	11	6.1
	20 %	120 %	CTB-4X03-1100		22	5.1
	30 %				33	5.1
	40 %				44	5.1
	50 %	130 %			55	4.7
NE300-4T1320G/1600P-U NE300-4T1320G/1600P-D	10 %	100 %	CTB-4X02-0750	Single	13	5.1
	20 %	120 %	CTB-4X04-2000		26	4.2
	30 %				40	4.2
	40 %				53	4.2
	50 %	130 %			66	3.9
NE300-4T1600G/1850P-U NE300-4T1600G/1850P-D NE300-4T1600G/1850P-F	10 %	100 %	CTB-4X04-2000	Single	16	4.2
	20 %	120 %			32	3.5
	30 %				48	3.5
	40 %				64	3.5
	50 %	130 %			80	3.2
NE300-4T1850G/2000P-U NE300-4T1850G/2000P-D NE300-4T1850G/2000P-F	10 %	100 %	CTB-4X04-2000	Single	19	3.6
	20 %	120 %			37	3
	30 %				56	3
	40 %				74	3
	50 %	130 %			93	2.8
NE300-4T2000G/2200P-U NE300-4T2000G/2200P-D	10 %	100 %	CTB-4X04-2000	Single	20	3.4
	20 %	120 %			40	2.8
	30 %		CTB-4X04-2800		60	2.8
	40 %				80	2.8
	50 %	130 %			100	2.6
NE300-4T2200G/2500P-U NE300-4T2200G/2500P-D	10 %	100 %	CTB-4X04-2000	Single	22	3
	20 %	120 %			44	2.5
	30 %		CTB-4X04-2800		66	2.5
	40 %				88	2.5
	50 %	130 %			110	2.3

Model	Braking rate	Braking torque	Applicable brake unit model	Single parallel	Resistance power (kW)	Resistance (Ω)
NE300-4T2500G/2800P-U NE300-4T2500G/2800P-D	10 %	100 %	CTB-4X04-2000	Single	25	2.7
	20 %	120 %	CTB-4X04-2800		50	2.2
	30 %				75	2.2
	40 %				100	2.2
	50 %	130 %			125	2.1
NE300-4T2800G/3150P-F	10 %	100 %	CTB-4X04-2800	Single	28	2.4
	20 %	120 %			56	2
	30 %				84	2
	40 %				112	2
	50 %	130 %	CTB-4X04-4500		140	2
NE300-4T3150G/3550P-F	10 %	100 %	CTB-4X04-2800	Single	32	2.1
	20 %	120 %			63	1.8
	30 %				95	1.8
	40 %		CTB-4X04-4500		126	1.8
	50 %	130 %			158	1.6
NE300-4T3550G/4000P-F	10 %	100 %	CTB-4X04-4500	Single	36	1.9
	20 %	120 %	CTB-4X04-2800	2 in parallel	72	1.6
	30 %				108	1.6
	40 %				146	1.6
	50 %	130 %			180	1.6
NE300-4T4000G/4500P-F	10 %	100 %	CTB-4X04-4500	Single	40	1.68
	20 %	120 %	CTB-4X04-2800	2 in parallel	80	1.4
	30 %				120	1.4
	40 %				160	1.4
	50 %	130 %			200	1.3
NE300-4T4500G/5000P-F	10 %	100 %	CTB-4X04-2800	2 in parallel	45	1.5
	20 %	120 %	CTB-4X04-4500		90	1.3
	30 %				135	1.3
	40 %				180	1.3
	50 %	130 %			225	1.2
NE300-4T5000G/5600P-F	10 %	100 %	CTB-4X04-2800	2 in parallel	50	1.3
	20 %	120 %	CTB-4X04-4500		100	1.1
	30 %				150	1.1
	40 %				200	1.1
	50 %	130 %			250	1.0

In most cases, the brake is only activated occasionally. This allows the continuous rated power of the brake resistor to be much lower than the rated power of the drive . Therefore, it is more suitable to choose a brake resistor with a continuous rated power value suitable for most occasions. However, care must be taken to consider that the instantaneous rated power of the brake resistor must be sufficient to cope with the possible extreme brake load conditions.

The optimization of the brake resistor must carefully consider the duty cycle of the brake cycle.

The resistance value of the selected brake resistor must not be lower than the specified minimum resistance value. A larger resistance value can save costs and ensure safety in the event of a brake system failure.

However, if the selected resistance value is too high, the braking ability will decrease, which may cause the drive to experience overvoltage protection during braking.

When using more than 2 brake units, it is necessary to pay attention to the equivalent resistance value of the parallel brake unit, which cannot be lower than the equivalent minimum resistance value of each drive. When using the brake unit, please read carefully and follow the wiring instructions in the brake unit user manual.

Figure 9-10 Model description of braking unit

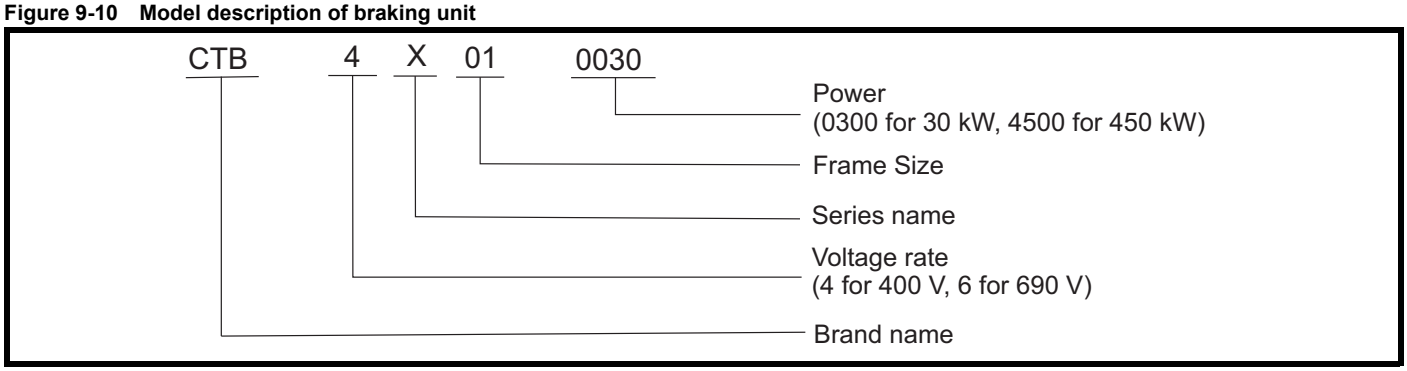

Table 9-6 Selection Table of braking unit

Model	Drive power	Voltage rate	Peak current	Default chopper voltage	Breaking torque	Terminal	Wiring cable (mm^2)
CTB-4X01-0300	30 kW	400 V	50 A	DC 660 V ±5 V (600-760 V Adjustable)	120 %	M4	6-8
CTB-4X02-0550	45 - 55 kW		75 A		120 %	M4	6-8
CTB-4X02-0750	75 kW		100 A		120 %	M4	10-16
CTB-4X03-1100	90 - 110 kW		150 A		120 %	M5	10-16
CTB-4X04-1100	55 - 110 kW		150 A		150 %	M8	10-16
CTB-4X04-2000	132 - 200 kW		200 A		150 %		25-35
CTB-4X04-2800	220 - 280 kW		300 A		150 %		25-35
CTB-4X04-4500	315 - 450 kW		450 A		150 %		50-70

Figure 9-11 Outline and dimension of braking unit

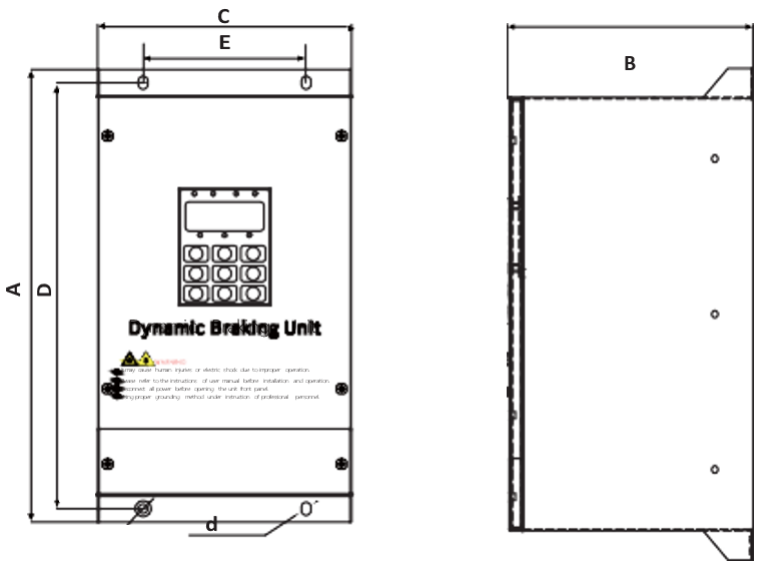

Table 9-7 Dimension and weight of braking unit (mm)

Drive model	A	B	C	D	E	d	Weight (Kg)
CTB-4X01-0300	205	75	105	188	65	4 Ø6	1.5
CTB-4X02-0550	215	110	122	200	82	4 Ø6	2.5
CTB-4X02-0750							
CTB-4X03-1100	290	199	187	270	120	4 Ø7	5.2
CTB-4X04-1100	343	225	180	320	110	4 Ø7	8.5
CTB-4X04-2000							
CTB-4X04-2800							
CTB-4X04-4500							

9.7 Model selection of system

9.7.1 NE200 model selection of system

Table 9-8 NE200-4T0040G/0055PB and below

Drive Model	Circuit Breaker (A)	Contactor (A)	R,S,T,P1, (+), PB, (-), U, V, W			Grounding terminal PE ⏚		
			Terminal screw	Tightening torque (Nm)	Wire spec. (mm^2)	Terminal screw	Tightening torque	Wire spec. (mm^2)
NE200-2S0004GB	10	9	M3	0.87 Nm (7.7 lb in)	0.75	M3	0.87 Nm (7.7 lb in)	0.75
NE200-2S0007GB	16	12			1.5			1.5
NE200-2S0015GB	32	25			2.5			2.5
NE200-4T0007G/0015PB	10	9			0.75			0.75
NE200-4T0015G/0022PB	10	9			1.5			1.5
NE200-4T0022GB -M	10	9			2.5			2.5
NE200-2S0022GB	40	32	M4	1.5 Nm (13.3 lb in)	4.0	M4	1.5 Nm (13.3 lb in)	4.0
NE200-4T0022G/0040PB	10	9			2.5			2.5
NE200-4T0040G/0055PB	16	12			4.0			4.0

9.7.2 NE300 model selection of system

Table 9-9 NE300-4T0220G/0300PB and below

Drive Model	Circuit Breaker (A)	Contactor (A)	R,S,T,P1, (+), PB, (-), U, V, W			Grounding terminal PE ⏚		
			Terminal screw	Tightening torque (Nm)	Wire spec. (mm^2)	Terminal screw	Tightening torque (Nm)	Wire spec. (mm^2)
NE300-4T0022G/0040PB	16	10	M4	1.2~1.5	2.5	M4	1.2~1.5	2.5
NE300-4T0040G/0055PB	25	16			4			4
NE300-4T0055G/0075PB	32	25			6			6
NE300-4T0075G/0110PB	40	32			6			6
NE300-4T0110G/0150PB	63	40			6			6
NE300-4T0185G/0220PB	100	63	M5	4~6	10	M5	4~6	10
NE300-4T0220G/0300PB	100	100			16			16

Table 9-10 NE300-4T0300G/0370P and above

Drive Model	Circuit Breaker (A)	Contactor (A)	R,S,T,P1, (+), PB, (-), U, V, W			Grounding terminal PE ⏚		
			Terminal screw	Tightening torque (Nm)	Wire spec. (mm^2)	Terminal screw	Tightening torque (Nm)	Wire spec. (mm^2)
NE300-4T0300G/0370P	125	100	M6	4~6	25	M6	4~6	16
NE300-4T0370G/0450P	160	100			25			16
NE300-4T0450G/0550P	200	125	M8	10~12	35	M8	10~12	16
NE300-4T0550G/0750P	200	170	M10	20~25	50			25
NE300-4T0750G/0900P	250	230			60			35
NE300-4T0900G/1100P	315	250			70			35
NE300-4T1100G/1320P	350	330			100			50
NE300-4T1320G/1600P	400	330	M12	40~45	150	M10	20~25	75
NE300-4T1600G/1850P-	500	400			185			50x2
NE300-4T1600G/1850P-	500	400			185			
NE300-4T1850G/2000P-	400	330			150			
NE300-4T1850G/2000P-	500	400			185			
NE300-4T2000G/2200P-	630	500			240			60x2
NE300-4T2200G/2500P-	800	630			150x2			75x2
NE300-4T2500G/2800P-	1000	630			150x2			100x2
NE300-4T2800G/3150P-	1000	800			185x2			125x2
NE300-4T3150G/3550P-	1200	800			240x2			150x2
NE300-4T3550G/4000P-	1280	960	M16	100~120	185x3	M12	40~45	185x2
NE300-4T4000G/4500P-	1380	1035			185x3			185x2
NE300-4T4500G/5000P-	1450	1150			185x3			240x2
NE300-4T5000G/5600P-	1720	1290			185x3			
NE300-4T5600G/6300P-	1900	1450			185x3			
NE300-4T6300G/7100P-	2200	1630			240x3			
NE300-4T7100G/8000P-	2550	1830			240x3			
NE300-4T8000G/9000P-	2950	2050			240x3			

10 Options

10.1 Options

10.1.1 Function brief of options (only for NE300)

Option card	Model No.	Terminals	Function	Model range
I/O option	NE30-I/O Lite	X6	Multi-function input terminal 6 (With “PLC” Terminal)	NE300-4T0015G/0022PB ~ NE300-4T8000G/9000P-F
		X7	Multi-functions input terminal 7 (With “PLC” Terminal)	
		X8	Multi-functions input terminal 8 (With “PLC” Terminal)	
		Y2	Multi-functions input terminal Y2 (to COM)	
		PLC	PLC COM Terminal	
		BRA/BRB/BRC	Relay Output 2	
		AO2	Analogue Output2 (0~10 V,0/4~20 mA Optional)	
		GND	Analogue Output COM Terminal	
	NE30-I/O Relay	BRA/BRB/BRC	Relay output 2	
		PLC	PLC common end (to PLC)	
		AO2	Analog output 2 (0~10 V, 0/4~20 mA)	
		GND	Analogue Output COM Terminal	
Injection molding option	NE30-ZS01	+A1	0-1A current input	NE300-4T0110G/0150PB ~ NE300-4T8000G/9000P-F
		-A1	0-1A current output	
		+A2	0-1A/2A current input	
		-A2	0-1A/2A current output	
		X6	Multi-function input terminal 6 (to PLC)	
		COM	Multi-function input common end	
± 10V extension option	NE30-AN01	485+	485 differential signal +	NE200-4T0022G/0040PB ~ NE300-4T8000G/9000P-F
		485-	485 differential signal -	
		-10 V	Provide -10 V to external (to GND)	
		A13	±10 V analog input (to GND)	
		GND	Analog input common end	
Speed tracking option	NE30-SP01	U	Connect to drive U phase output	NE200-4T0015G/0022PB ~ NE300-4T0150G/0185PB
		W	Connect to drive W phase output	
CC-LINK option	NEF-CCLINK	DA	Signal DA	NE 300
		DB	Signal DB	
		DG	Signal Ground	
		SLD	Shielding Ground	
		FG	Grounding	
Profibus-DP option	NEF-Profibus	RxD/TxD-P	Positive end of data transfer	NE 300
		RxD/TxD-N	Negative end of data transfer	
		+5 V	The power supply	
		0 V	Ground	
		Shield	Sheilding	
PROFINET option	NEF-PROFINET	RJ45	2 gateways	NE300
Modbus TCP option	NEF-TCP	RJ45	2 gateways	NE300
Resolver PG encoder option	B602PG03A	R1, R2	Base time signal	NE300
		S1, S3	SIN+ and SIN- input signal	
		S2, S4	COS+ and COS- input signal	
		GND	GND connection for connecting the cable shield.	
		AO+, AO-	The input encoder signal is outputted as A/B/Z differential signal	
		BO+, BO-		
		ZO+, ZO-		

Option card	Model No.	Terminals	Function	Model range
5 V differential signal PG encoder option	B602PG04A	+5 V, COM	Power supply	NE300
		A+, A-	A/B/Z input of the 5 V differential signal	
		B+, B-		
		Z+, Z-		
		U+, U-	The UVW location signal of encoder	
		V+, V-		
		W+, W-		
		B+, B-		
24 V differential signal PG encoder option	B602PG02A	+24 V, COM	A/B signal input	NE300
		A+, A-		
		B+,B-		

NOTE

1. When using ±10 V Option card, the AI1 on control board is invalid.
2. The operating voltage of the Resolver PG encoder is 7 V.
3. The operating voltage of the 5 V differential signal encoder is 5 V. UVW also is used as the normal encoder.
4. The operating voltage of the 24 V differential signal encoder is 24 V.

10.1.2 Mounting instruction of options (PCBA)

Option Name	Terminal on control PCBA	Option card diagram
IO	CN3	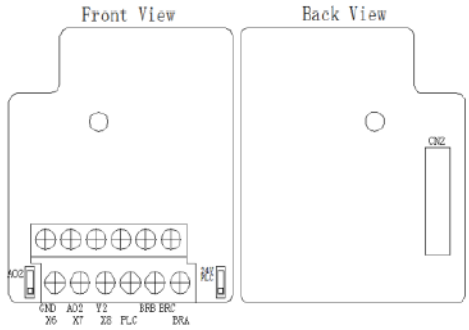
	CN3	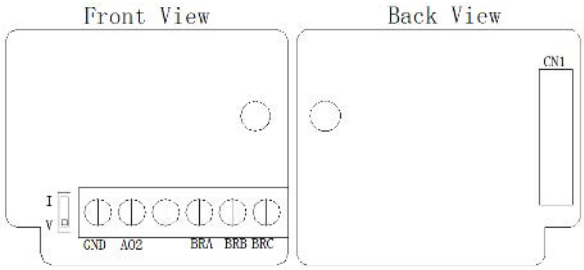
Injection molding option	CN3	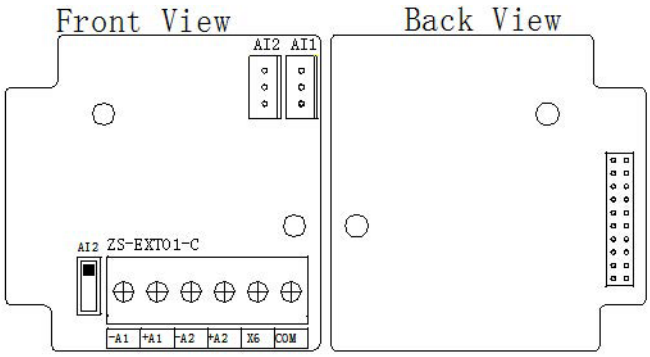
±10 V extension option	CN3	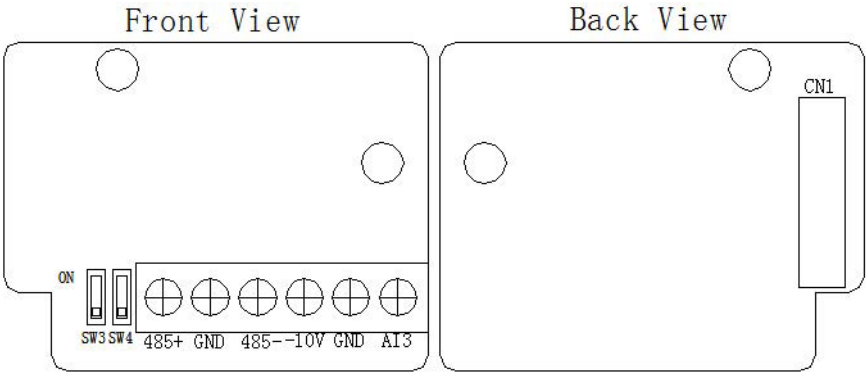
Speed tracking option	CN3	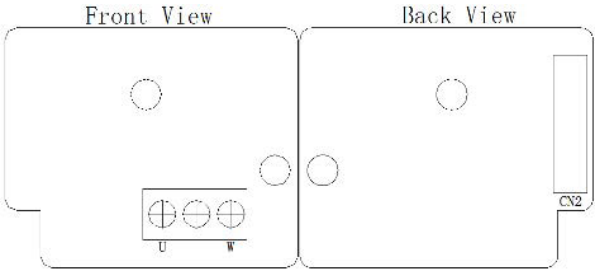

Option Name	Terminal on control PCBA	Option card diagram
Resolver PG encoder option	CN4+CN8	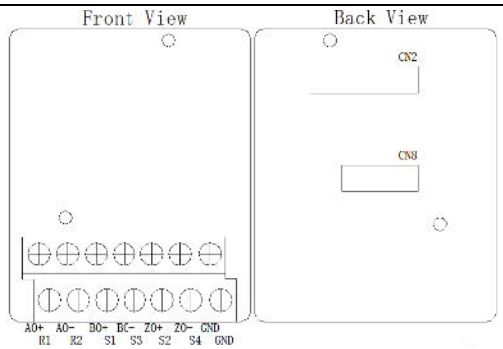
5 V differential signal PG encoder option	CN4+CN8	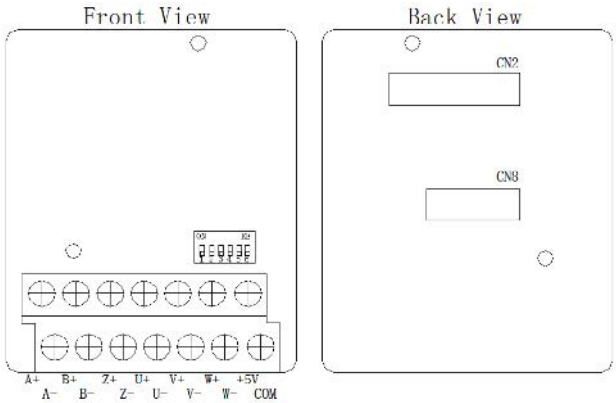
24 V differential signal PG encoder option	CN4+CN8	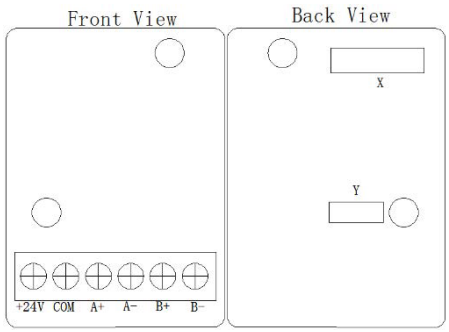
CC-LINK	CN3	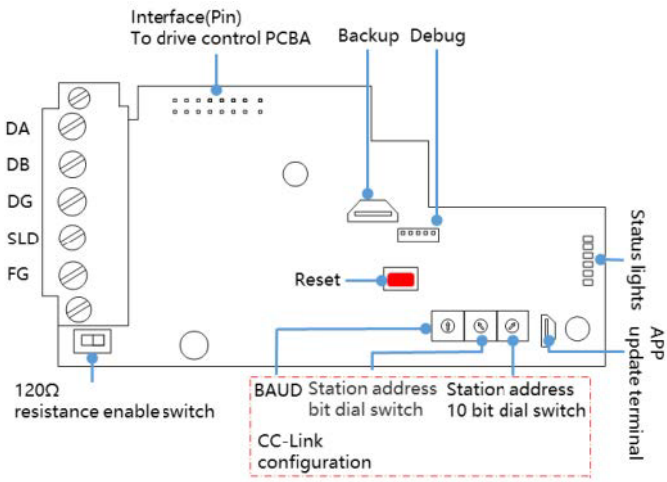

Option Name	Terminal on control PCBA	Option card diagram
Profibus-DP	CN3	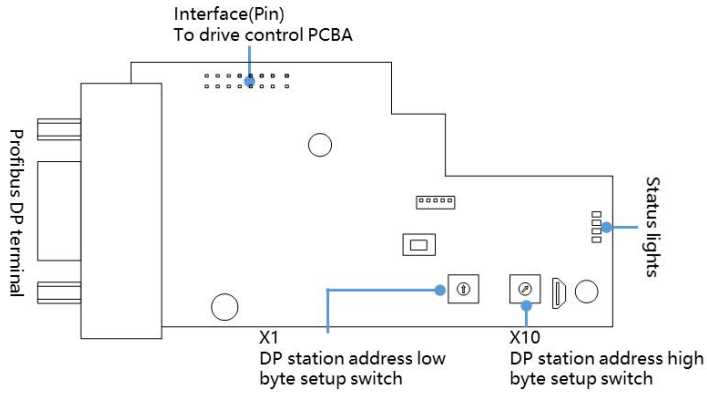
Profinet	CN3	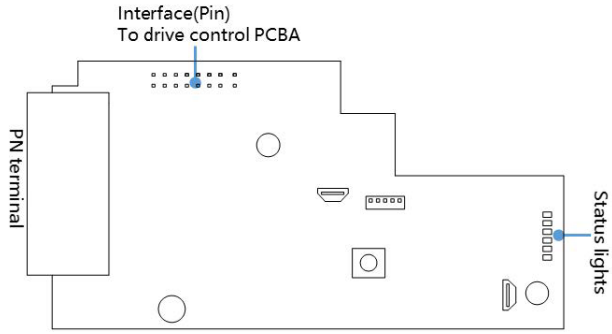
MODBUS TCP	CN3	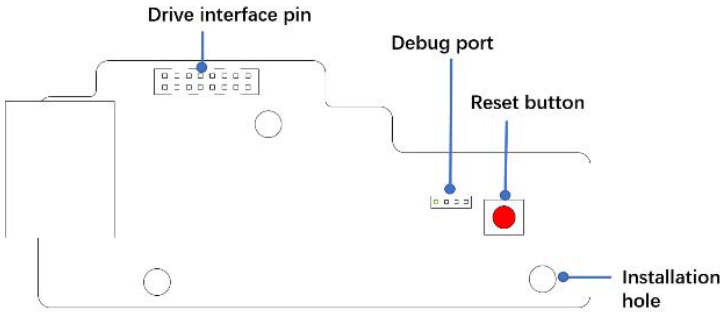

10.1.3 Function and using instruction of option

1. Resolver PG encoder option instruction

Resolver PG encoder option is an adapter between drive and Resolver PG encoder, can be for the closed-loop control application of synchronous and induction motor.

Table 10-1 Specification/terminal instruction

Terminal name	Function	Response speed	Max. Current	Remark
R1, R2	Base time signal			
S1, S3	SIN+ and SIN- input signal	100 kHz	---	
S2, S4	COS+ and COS- input signal	100 kHz	---	
GND	Ref. GND of the differential signal, can wiring the shield line	---	---	
AO+, AO- BO+, BO- ZO+, ZO-	The input encoder signal is outputted as A/B/Z differential signal, the location signal, though the IC operation. Terminal to Terminal	100 kHz		

Table 10-2 Terminal correspondence Table:

Resolver option terminal	Resolver PG encoder terminal	Resolver option terminal	Resolver PG encoder terminal
R1	EXC+	S3	SIN-
R2	EXC-	S2	COS+
S1	SIN+	S4	COS-

NOTE

Toggle-switch on the option is at “ON’ location

While the output signal of terminal AO+, AO-, BO+, BO-, ZO+, ZO- is the differential signal which can drive the 5 V differential encoder.

Wiring diagram between Resolver and 5 V differential signal encoder	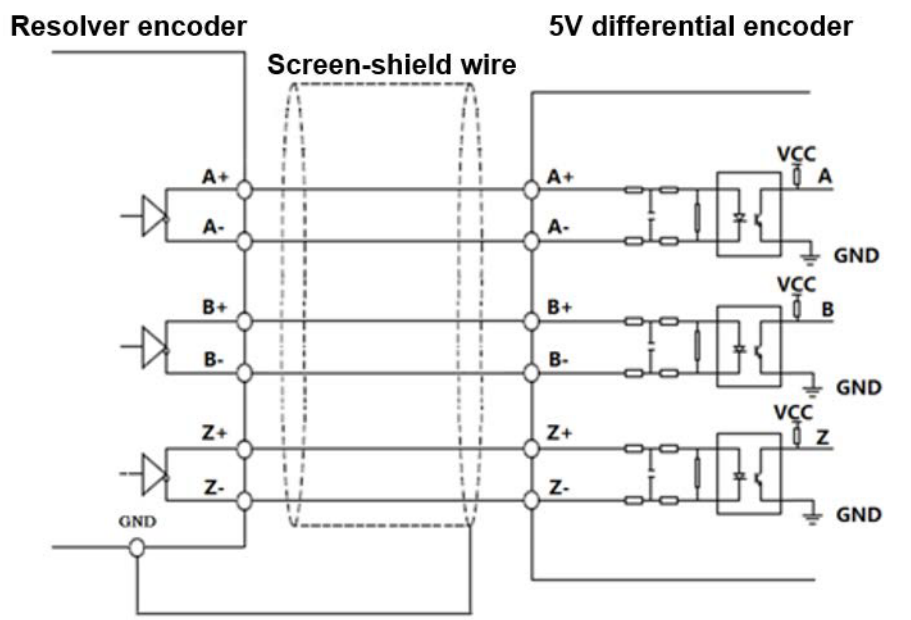

2. 5V differential signal PG encoder option

5 V differential signal encoder is the adapter between drive and the differential encoder, can be for the closed-loop control application of synchronous and induction motor.

For the closed-loop control application of synchronous motor, in the meantime, the UVW encoder with the magnetic polarity detection can be used while the magnetic polarity quantity is same with the synchronous motor's magnetic polarity quantity.

For the closed-loop encoder application of induction motor, the UVW terminal can be wired while using the normal differential encoder.

Table 10-3 Specification/Terminal instruction

Terminal name	Function	Response speed	Max. Current	Remark
+5 V, COM	Power supply		0.5 A	
A+, A- B+, B- Z+, Z-	A/B/Z input of the 5V differential signal	250 kHz	---	
U+, U- V+, V- W+, W-	The UVW location signal of encoder	250 kHz	---	

Encoder wiring

Differential signal output encoder wiring diagram (5V)	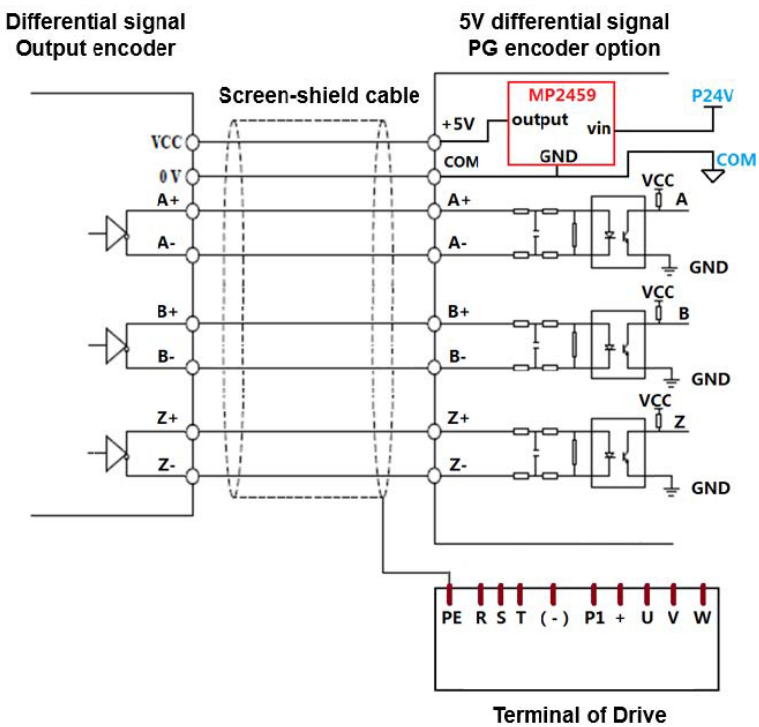

Open collector output encoder wiring diagram (5V)	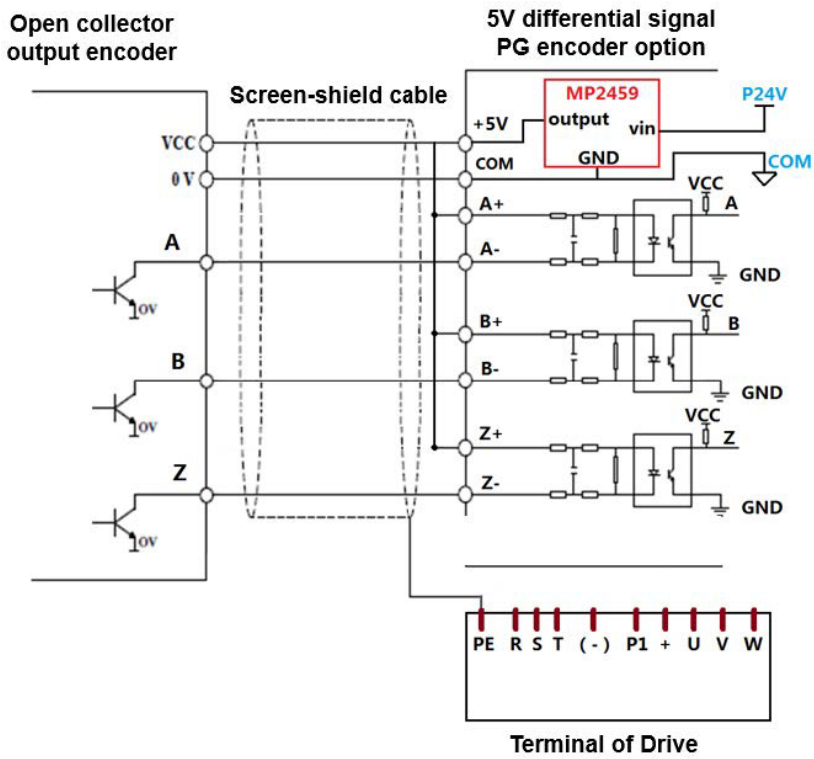
Push-pull encoder wiring diagram (5V)	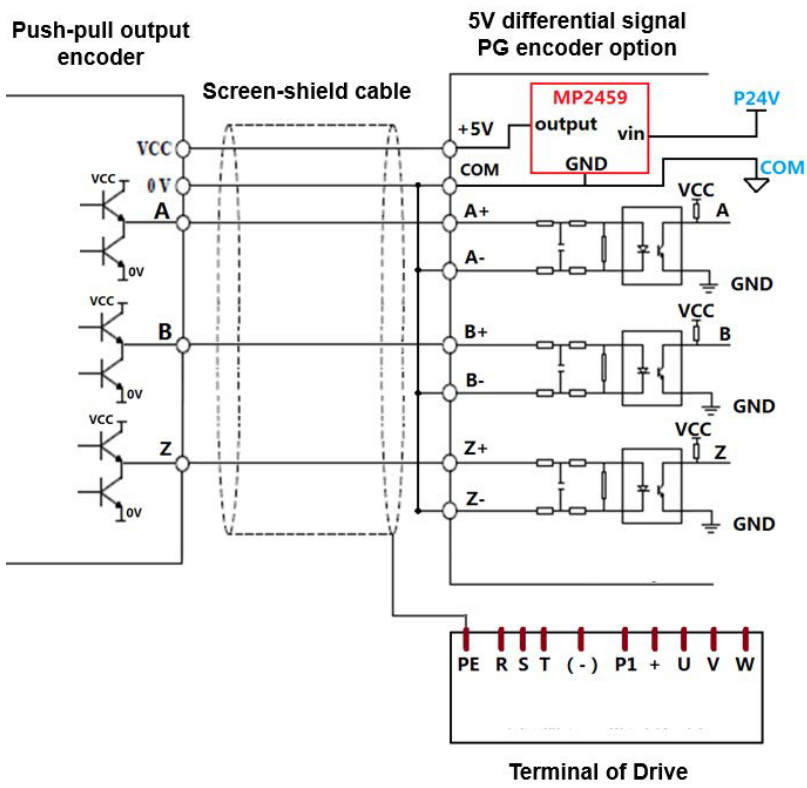

3. 24 V differential signal PG encoder option

24 V differential signal PG encoder option is the adapter between drive and the differential encoder, can be for the closed-loop control application of synchronous and induction motor.

Table 10-4 Specification/Terminal instruction

Terminal name	Function	Response speed	Max. Current	Remark
+24 V, COM	Power supply		100 mA	
A+, A- B+, B-	A/B signal input	250 kHz	---	

Encoder wiring

Differential signal output encoder wiring diagram (24V)	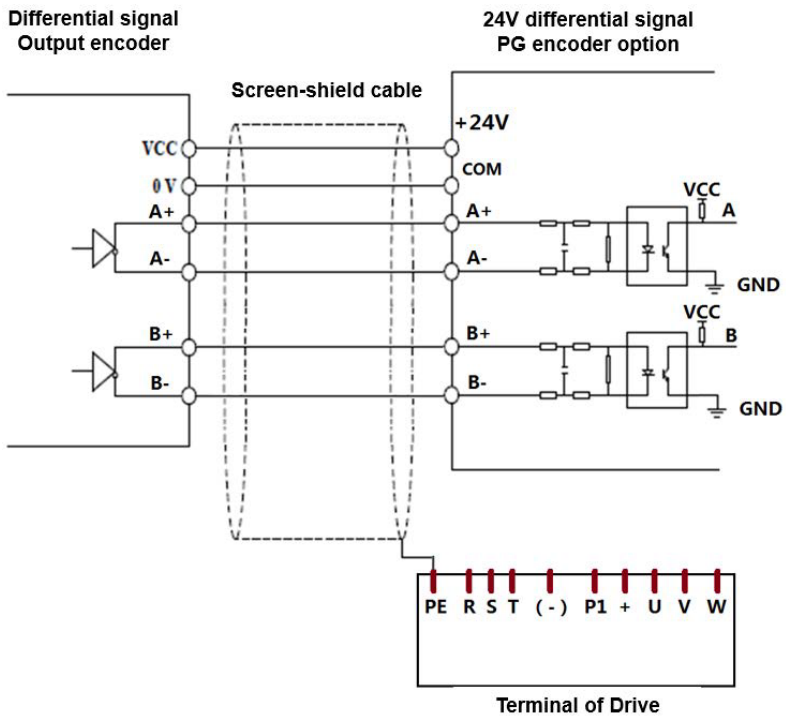

Open collector output encoder wiring diagram (24V)	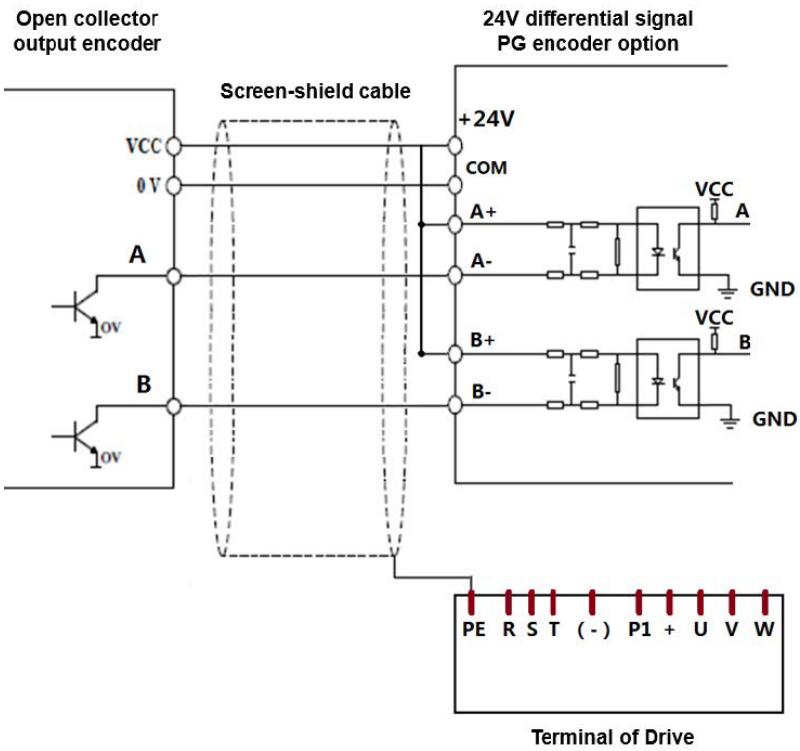
Push-pull encoder wiring diagram (24V)	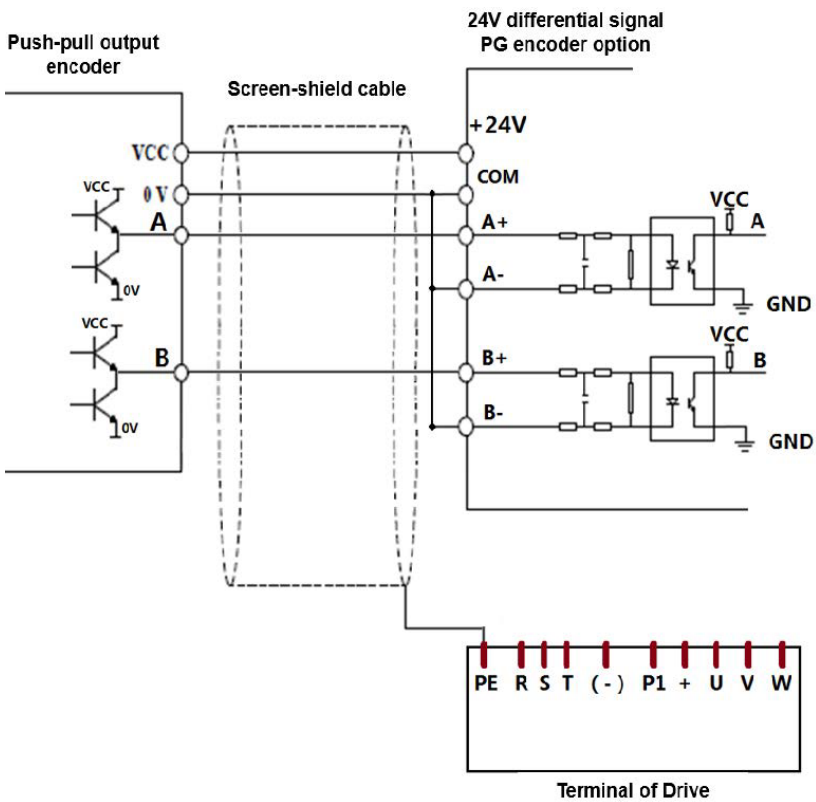

4. Modbus-RTU to CC-Link Communication Option

This communication board could realize the conversion between MODBUS-RTU and CC-Link of field bus, and it could be applied with VFD NE-300. The RS485 interface of the board works as the Modbus master while the CC-Link interface works as the slave. Please see User-Guide for details.

Technical features

1. Supports CC-Link Ver.2
2. CC-Link communication rate :(10 M/5 M/ 2.5 M /625 K/156 Kbps)
3. Number of memory stations occupied by CC-Link communication: 3 stations (not modifiable)
4. CC-link communication extended loop station setting: 8 times (not modifiable)
5. Modbus function code supported by ModbusRTU communication board: 03/06
6. Modbus slave address read by ModbusRTU communication board: 1 (not modifiable)
7. Baud rate of ModbusRTU communication board: 19200 bps (not modifiable)
8. ModbusRTU communication setting on the communication board: data bit is 8, even check, 1 stop bit (not modifiable)
9. Working voltage: 24 Vdc, 5 Vdc
10. Working environment temperature: -40 ~ 85 ^{o}C, relative humidity: 5 ~ 95 % (no condensation)
11. Storage temperature: -55 ~ 125 ^{o}C
12. Installation: Fix it in the VFD with 3 pc of screws
13. Dimensions: 90.37*22*182 (L * W * H, unit: mm)
14. Protection level: IP20

NOTE

Before using the board card, the VFD parameters should be set as follows:

Function code	Name	Set value
F0.02	Run command control mode settings	2
F0.03	Frequency setting 1	4
F0.04	Frequency setting 1	4
Fd.00	485 communication function	1
Fd.01	IP Address	1
Fd.02	Baud rate selection	4

5. NEF-Profibus Communication Option

This communication board converts Modbus-RTU to Profibus-DP for NE300, the RS485 interface is Modbus Master, and Profibus-DP is slave. When using this module, engineers must also read NE300 user guides, specially the Modbus protocol part.

Technical features

1. Supported Modbus function codes:03/06
2. Support Profibus-DP V0
3. Profibus-DP communication rates: adaptive(9.6 Kbps-12 Mbps)
4. DP data area:
   76 bytes input
   14 bytes output

The output and input here are relative to PLC, the output 14 bytes (7 words) are outputs from PLC to drive registers, including 0001H~0004H (communication control word, communication reference, digital output setting, analog output setting) and EEPROM operation of address, data, enable bit, EEPROM operation can be used to write drive parameters like acceleration and deceleration time and maximum frequency with non-cycle mode. Input 76 bytes are inputs from drive registers to PLC including 0001H~0004H,0020H~002FH,0030H~0039H, 8 bytes of DP communication error codes, and EEPROM operation (address, data, status, and error code).

5. Modbus slave address:1 (not modifiable)
6. Modbus baud rate:19200 bps (not modifiable)
7. 8 data bits, even parity check,1 stop bit (not modifiable)
8. Working supply: 24 Vdc,5 Vdc
9. Ambient temperature: -40~85 ^{o}C, humidity: 5~95 % (no condensing)
10. Storage temperature: -55~125 ^{o}C
11. Installation: fixed to CN3 of NE300 control board with 2 screws.
12. Dimension: 90.37*22*182 (Length*Width*Height, unit: mm)
13. Protect level: IP20
14. Certification: CE

NOTE

Drive parameters should be set before using this communication board, see below for details:

Function code	Name	Set value
F0.02	Run command control mode	2
F0.03	Frequency reference 1	4
Fd.00	485 communication enable	1
Fd.01	Communication address	1
Fd.02	Baud rate	4
Fd.03	Parity bit	0

6. Modbus-RTU to PROFINET Communication Option

This option is for NE-300 drive. The function is to convert communication protocol between Modbus-RTU and PROFINET. The option's RS485 is host of Modbus, PROFINET terminal is the follower.

Technical features

1. Modbus function code: 03/06
2. PROFINET is available
3. Modbus slaver address read: 1 (Unchangeable)
4. Modbus baud rate: 19200 bps (Unchangeable)
5. Data bit is 8, even check, 1 stop bit (Unchangeable)
6. Voltage rated: 24 Vdc, 5 Vdc
7. Working environment temperature: -40~85 ^{o}C, Humidity 5~95 % (no condensation)
8. Storage temperature: -55~125 ^{o}C
9. Installation: in drive with two screws
10. Dimensions: 90.37 x 22 x 182 (L x W x H, Unit: mm)
11. IP grade: IP20
12. Certification: CE

NOTE

Please setup the function codes before starting to work

Function code	Name	Set value
F0.02	Run command control mode	2
F0.03	Frequency reference1	4
F0.04	Frequency reference2	4
Fd.00	485 Communication	1
Fd.01	Local address	1
Fd.02	Baud rate setup	4
Fd.03	Parity bit setup	0

7. Modbus-RTU to TCP Communication Option

This communication option realizes the interconversion between MODBUS-RTU protocol and Modbus-TCP, and is suitable for NE-300 drive. The RS485 interface of the board serves as MODBUS master station, and the RJ45 interface serves as Modbus-TCP server.

Technical features

1. MODBUS function code supported by network port: 03/04/06
2. Modbus-TCP default IP:192.168.1.100 (modifiable)
3. Network interface rate: 10 M/100 M adaptive
4. Modbus-TCP data area: input 84 bytes,
5. Output 14 bytes,
6. MODBUS function code supported by Modmus-RTU communication board: 03/06
7. Address of MODBUS slave station read by Modbus-RTU communication board: 1 (not modifiable)
8. Modbus-RTU communication Baud rate: 19200 bps (not modifiable)
9. Modbus-RTU communication setting on the communication board: data bit is 8, even check, 1 stop bit (not modifiable)
10. Working voltage: 24 Vdc, 5 Vdc
11. Working environment temperature: -40 ~ 85 ^{o}C, relative humidity: 5 ~ 95 % (no condensation)
12. Storage temperature: -55 ~ 125 ^{o}C
13. Installation: Fix it in the drive with 3 screws
14. Dimensions: 90.37 x 22 x 182 (L x W x H, unit: mm)
15. Protection level: IP20

Function code	Name	Value (Given)
F0.02	Run command control mode	2
F0.03	Frequency reference1	4
F0.04	Frequency reference2	4
Fd.00	485 Communication function	1
Fd.01	Address of the machine	1
Fd.02	Baud rate option	4
Fd.03	Parity bit setup	0

10.2 Guidance for reactor and filter selection

Figure 10-1 Reactor model description

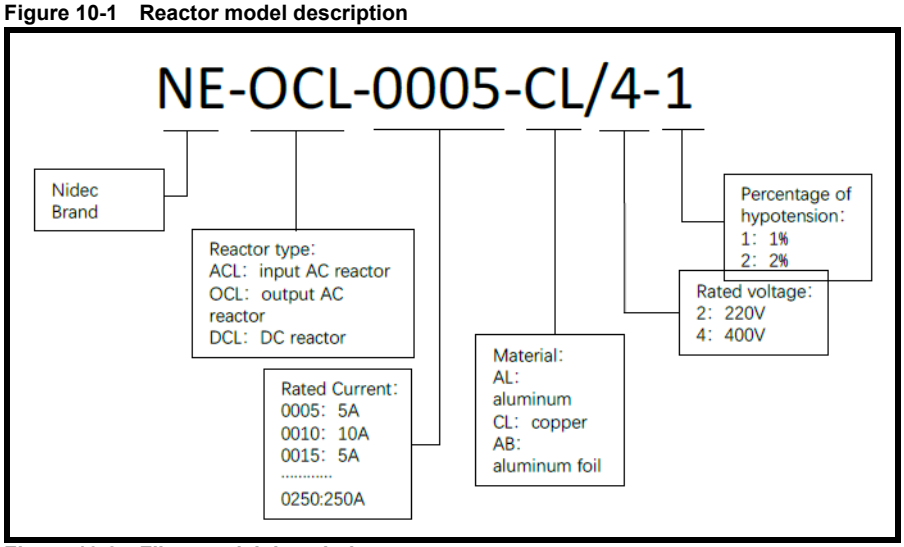

Figure 10-2 Filter model description

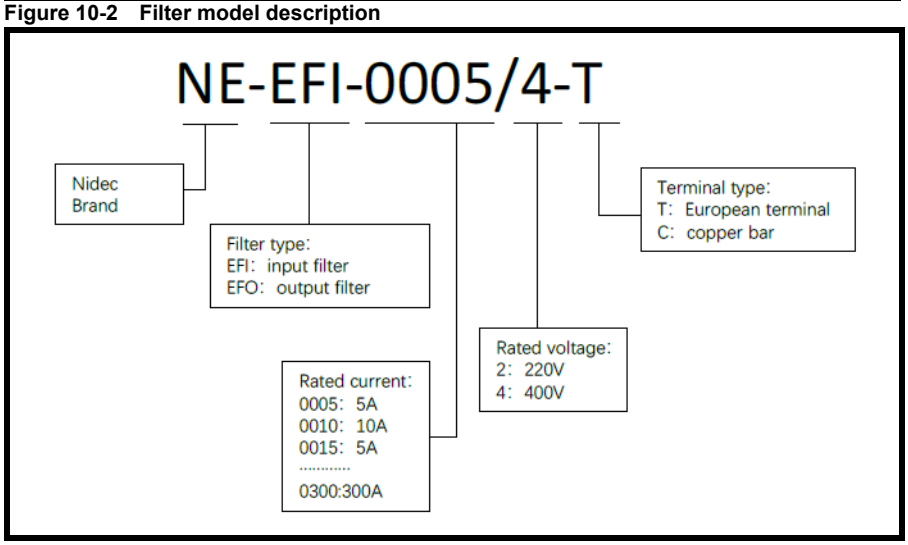

10.2.1 Selection table for 380 V AC output reactor (1 % reactance rate)

Whether the output side of the drive is equipped with AC output reactor is determined according to the specific situation. The transmission line between the drive and the motor should not be too long, if the cable is too long, the distributed capacitance will be large, which is easy to produce high harmonic current.

Drive model	Reactor model	Order number	Inductance (mH)	Rated current (A)	Weight kg (lb)	Dimension
NE200-4T0007G/0015B	NE-OCL-0005-CL/4-1	1006A021	1.4	5	1.7 kg (3.75 lb)	See Table 10-7
NE200-4T0022GB-M	NE-OCL-0007-CL/4-1	1006A022	1.0	7	1.8 kg (3.97 lb)	
NE200-4T0040G/0055PB	NE-OCL-0010-CL/4-1	1006A023	0.7	10	1.85 kg (4.08 lb)	
NE300-4T0055G/0075PB	NE-OCL-0015-AL/4-1	1006A024	0.455	15	2.5 kg (5.51 lb)	
NE300-4T0075G/0110PB	NE-OCL-0020-AL/4-1	1006A025	0.35	20	2.5 kg (5.51 lb)	
NE300-4T0110G/0150PB	NE-OCL-0030-AL/4-1	1006A026	0.235	30	3.5 kg (7.72 lb)	
NE300-4T0150G/0185PB	NE-OCL-0040-AL/4-1	1006A027	0.175	40	5 kg (11.02 lb)	
NE300-4T0185G/0220PB	NE-OCL-0050-AL/4-1	1006A028	0.14	50	5 kg (11.02 lb)	
NE300-4T0220G/0300PB	NE-OCL-0060-AL/4-1	1006A029	0.12	60	6.5 kg (14.33 lb)	
NE300-4T0300G/0370P	NE-OCL-0080-AL/4-1	1006A030	0.085	80	9 kg (19.84 lb)	
NE300-4T0370G/0450P	NE-OCL-0090-AL/4-1	1006A031	0.008	90	9 kg (19.84 lb)	
NE300-4T0450G/0550P	NE-OCL-0120-AL/4-1	1006A032	0.006	120	13 kg (28.66 lb)	
NE300-4T0550G/0750P	NE-OCL-0150-AL/4-1	1006A033	0.048	150	15 kg (33.07 lb)	
NE300-4T0750G/0900P	NE-OCL-0200-AL/4-1	1006A034	0.035	200	20 kg (44.09 lb)	
NE300-4T0900G/1100P	NE-OCL-0240-AB/4-1	1006A035	0.028	240	25 kg (55.16 lb)	
NE300-4T1100G/1320P	NE-OCL-0250-AB/4-1	1006A036	0.028	250	25 kg (55.16 lb)	

10.2.1.1 Dimension table for AC output reactor

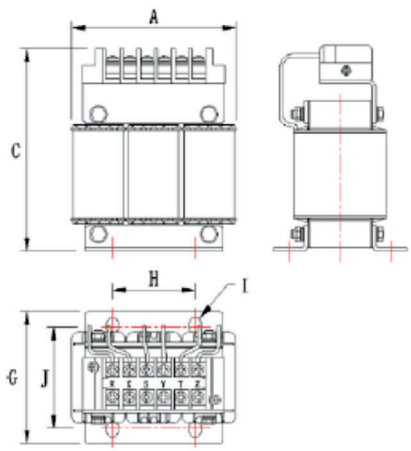

Fig.9-A

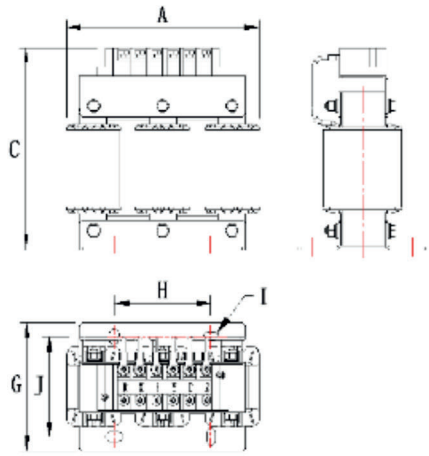

Fig. 9-B

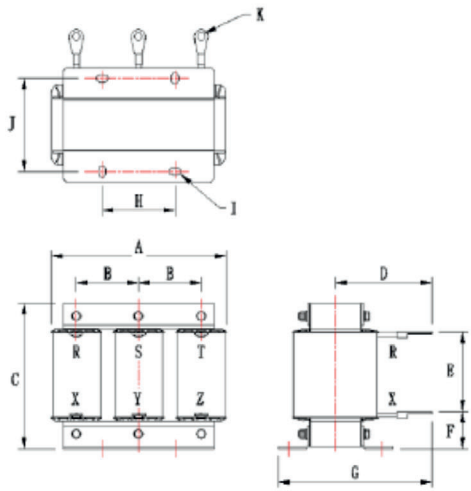

Fig.9-C

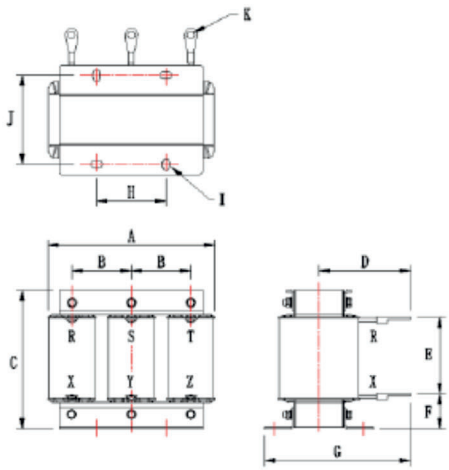

Fig.9-D

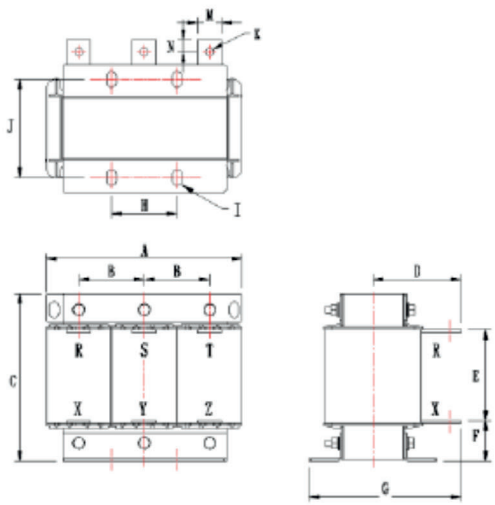

Fig.9-E

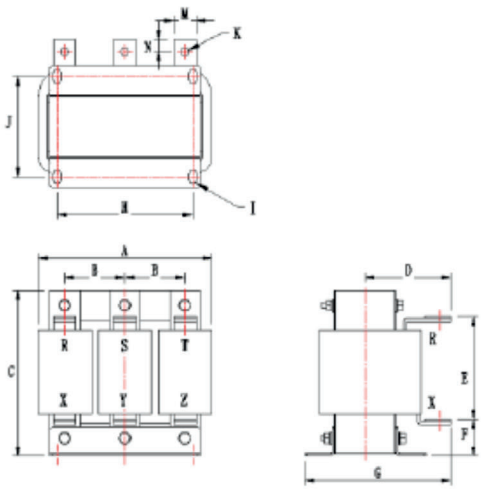

Fig.9-F

Table 10-7 Dimension table of three phase output AC reactor - mm (in)

Reactor model	Rated current (A)	A (Max) mm (in)	B mm (in)	C (Max) mm (in)	D mm (in)	E mm (in)	F mm (in)	G mm (in)	H mm (in)	I (Φ)	J mm (in)	K (Φ)	L	M mm (in)	N mm (in)	Drawing no.
NE-OCL-0005-CL/4-1	5	100 (3.94)	-	125 (4.92)	-	-	-	77±5 (3.03)	35±1 (1.38)	7x12	59±2 (2.32)	-	-	-	-	9-A
NE-OCL-0007-CL/4-1	7		-		-	-	-					-	-	-	-	
NE-OCL-0010-CL/4-1	10		-		-	-	-					-	-	-	-	
NE-OCL-0015-AL/4-1	15	150 (5.91)	-	150 (5.91)	-	-	-	92±5 (3.62)	70±1 (2.76)		72±2 (2.83)	-	-	-	-	9-B
NE-OCL-0020-AL/4-1	20		-		-	-	-					-	-	-	-	
NE-OCL-0030-AL/4-1	30	180 (7.09)	-	170 (6.69)	-	-	-	88±5 (3.46)			68±2 (2.68)	-	-	-	-	
NE-OCL-0040-AL/4-1	40		-		-	-	-	101±5 (3.98)			81±2 (3.19)	-	-	-	-	
NE-OCL-0050-AL/4-1	50		60±5 (2.36)	140 (5.51)	85±10 (3.35)	66±5 (2.6)	39±5 (1.54)	135±10 (5.31)				8.3 (0.33)	-	-	-	9-C
NE-OCL-0060-AL/4-1	60			150 (5.91)	95±10 (3.74)	74±5 (2.91)		150±10 (5.91)			90±2 (3.54)		-	-	-	
NE-OCL-0080-AL/4-1	80	210 (8.27)	70±5 (2.75)	160 (6.30)	100±10 (3.94)	82±5 (3.23)	42±5 (1.65)	155±10 (6.10)	80±1 (3.15)		91±2 (3.58)		-	-	-	9-D
NE-OCL-0090-AL/4-1	90												-	-	-	
NE-OCL-0120-AL/4-1	120	245 (9.65)	80±5 (3.15)	210 (8.27)	93±10 (3.66)	110±5 (4.33)	50±5 (1.97)	160±10 (6.30)		12x20	94±2 (3.70)	11 (0.43)	-	30 (1.18)	15 (0.6)	9-E
NE-OCL-0150-AL/4-1	150												-			
NE-OCL-0200-AL/4-1	200				108±10 (4.29)			185±10 (7.28)			120±2 (4.72)		-			
NE-OCL-0240-AB/4-1	240	240 (9.45)		225 (8.86)	115±10 (4.53)	136±5 (5.35)	47±5 (1.85)	195±10 (7.68)	180±1 (7.09)	11x20	130±2 (5.11)		-			9-F
NE-OCL-0250-AB/4-1	250												-			

10.2.2 Selection table for 380 V AC input reactor (2% reactance)

AC input reactor is mainly used to reduce the harmonic in the input current. As an option, it can be externally installed. when the application environment has higher harmonic requirement, the reactor can be externally installed (for models above 200G, if the AC input reactor need to be configured, please ensure there is enough installation space in the cabinet). The recommended type selection of input reactance is shown in the table below.

Drive model	Reactor model	Order number	Inductance (mH)	Rated current (A)	Weight kg (lb)	Dimension
NE200-4T0007G/0015B	NE-ACL-0005-CL/4-2	1006A004	2.8	5	1.7 kg (3.75 lb)	See Table 10-8
NE200-4T0022GB-M	NE-ACL-0007-CL/4-2	1006A005	2.0	7	1.8 kg (3.97 lb)	
NE200-4T0040G/0055PB	NE-ACL-0010-CL/4-2	1006A007	1.4	10	1.85 kg (4.08 lb)	
NE300-4T0055G/0075PB	NE-ACL-0015-AL/4-2	1006A008	0.93	15	2.5 kg (5.51 lb)	
NE300-4T0075G/0110PB	NE-ACL-0020-AL/4-2	1006A009	0.7	20	2.5 kg (5.51 lb)	
NE300-4T0110G/0150PB	NE-ACL-0030-AL/4-2	1006A010	0.47	30	3.5 kg (7.72 lb)	
NE300-4T0150G/0185PB	NE-ACL-0040-AL/4-2	1006A011	0.35	40	5 kg (11.02 lb)	
NE300-4T0185G/0220PB	NE-ACL-0050-AL/4-2	1006A012	0.28	50	5 kg (11.02 lb)	
NE300-4T0220G/0300PB	NE-ACL-0060-AL/4-2	1006A013	0.24	60	6.5 kg (14.33 lb)	
NE300-4T0300G/0370P	NE-ACL-0080-AL/4-2	1006A014	0.17	80	9 kg (19.84 lb)	
NE300-4T0370G/0450P	NE-ACL-0090-AL/4-2	1006A015	0.16	90	9 kg (19.84 lb)	
NE300-4T0450G/0550P	NE-ACL-0120-AL/4-2	1006A016	0.12	120	13 kg (28.66 lb)	
NE300-4T0550G/0750P	NE-ACL-0150-AL/4-2	1006A017	0.095	150	15 kg (33.07 lb)	
NE300-4T0750G/0900P	NE-ACL-0200-AL/4-2	1006A018	0.07	200	20 kg (44.09 lb)	
NE300-4T0900G/1100P	NE-ACL-0240-AB/4-2	1006A019	0.056	240	25 kg (55.16 lb)	
NE300-4T1100G/1320P	NE-ACL-0250-AB/4-2	1006A020	0.056	250	25 kg (55.16 lb)	

10.2.2.1 Product dimension chart for AC input reactor

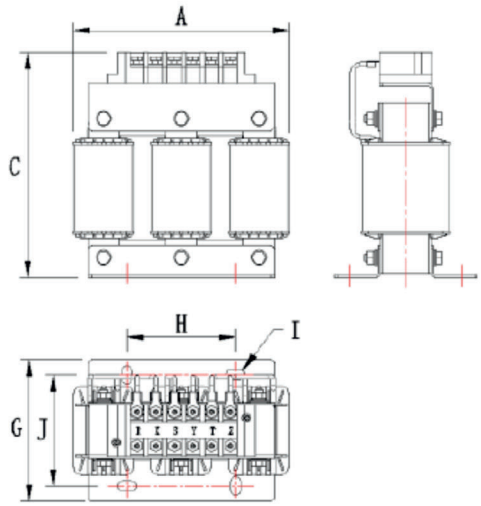

Fig.9-G

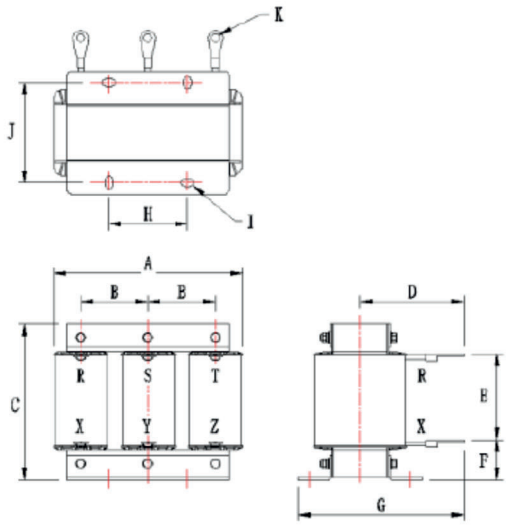

Fig.9-H

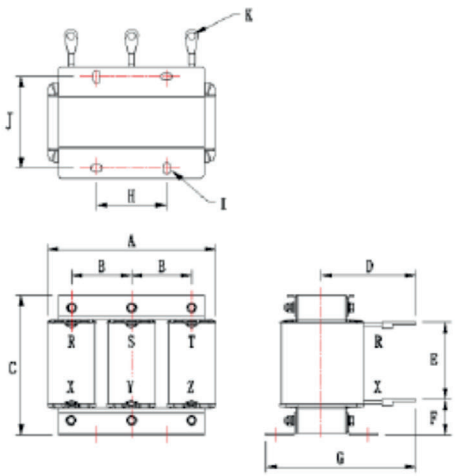

Fig.9-J

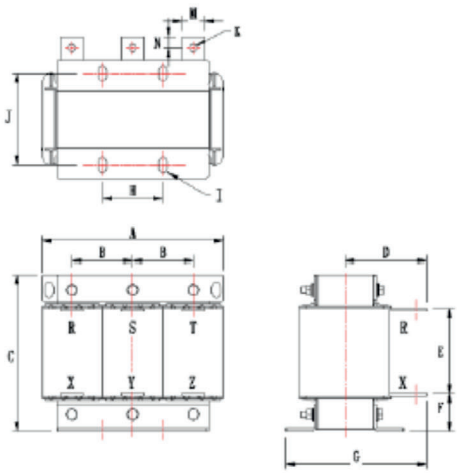

Fig.9-K

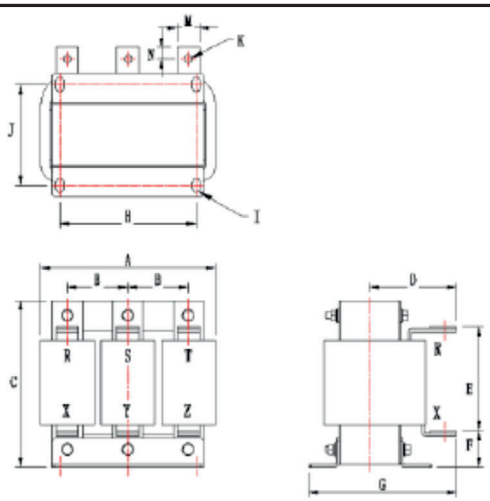

Fig.9-L

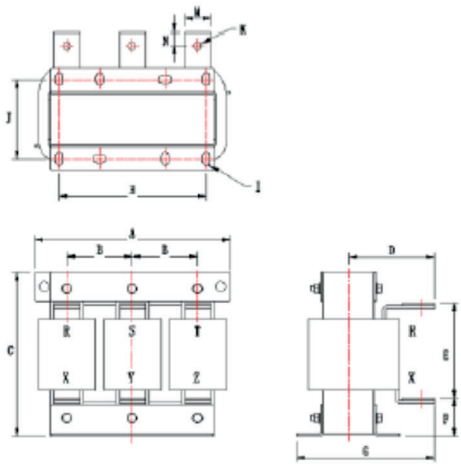

Fig.9-M

Table 10-8 Dimension table for three phase input reactors

Reactor model	Rated current (A)	A (Max) mm (in)	B mm (in)	C (Max) mm (in)	D mm (in)	E mm (in)	F mm (in)	G mm (in)	H mm (in)	I (Φ)	J mm (in)	K (Φ)	L	M mm (in)	N mm (in)	Drawing no.
NE-ACL-0005-CL/4-2	5	100 (3.94)	-	125 (4.92)	-	-	-	77±5 (3.03)	35±1 (1.38)	7x12	59±2 (2.32)	-	-	-	-	9-G
NE-ACL-0007-CL/4-2	7		-		-	-	-					-	-	-	-	
NE-ACL-0010-CL/4-2	10		-		-	-	-					-	-	-	-	
NE-ACL-0015-AL/4-2	15	150 (5.91)	-	150 (5.91)	-	-	-	92±5 (3.62)	70±1 (2.76)		72±2 (2.83)	-	-	-	-	9-H
NE-ACL-0020-AL/4-2	20		-		-	-	-					-	-	-	-	
NE-ACL-0030-AL/4-2	30	180 (7.09)	-	170 (6.69)	-	-	-	88±5 (3.46)			68±2 (2.68)	-	-	-	-	
NE-ACL-0040-AL/4-2	40		-		-	-	-	101±5 (3.98)			81±2 (3.19)	-	-	-	-	
NE-ACL-0050-AL/4-2	50		60±5 (2.36 16 kg (35.2)	140 (5.51)	85±10 (3.35)	66±5 (2.6)	39±5 (1.54)	135±10 (5.31)				8.3 (0.33)	-	-	-	9-J
NE-ACL-0060-AL/4-2	60			150 (5.91)	95±10 (3.74)	74±5 (2.91)		150±10 (5.91)			90±2 (3.54)		-	-	-	
NE-ACL-0080-AL/4-2	80	210 (8.27)	70±5 (2.75)	160 (6.30)	100±10 (3.94)	82±5 (3.23)	42±5 (1.65)	155±10 (6.10)	80±1 (3.15)		91±2 (3.58)		-	-	-	9-K
NE-ACL-0090-AL/4-2	90												-	-	-	
NE-ACL-0120-AL/4-2	120	245 (9.65)	80±5 (3.15)	210 (8.27)	93±10 (3.66)	110±5 (4.33)	50±5 (1.97)	160±10 (6.30)		12x20	94±2 (3.70)	11 (0.43)	-	30 (1.18)	15 (0.6)	9-L
NE-ACL-0150-AL/4-2	150												-			
NE-ACL-0200-AL/4-2	200				108±10 (4.29)			185±10 (7.28)			120±2 (4.72)		-			
NE-ACL-0240-AB/4-2	240	240 (9.45)		225 (8.86)	115±10 (4.53)	136±5 (5.35)	47±5 (1.85)	195±10 (7.68)	180±1 (7.09)	11x20	130±2 (5.11)		-			9-M
NE-ACL-0250-AB/4-2	250												-			

10.2.3 Selection table of DC reactor for 400 V drive

Drive model	Reactor model	Order number	Inductance (mH)	Rated current (A)	Weight (kg)	Dimension
NE300-4T0300G/0370P	NE-DCL-0065-AL/4	1006A048	0.8	65	6 kg (13.23 lb)	See Table 10-9
NE300-4T0370G/0450P	NE-DCL-0078-AL/4	1006A049	0.7	78	8 kg (17.63lb)	
NE300-4T0450G/0550P	NE-DCL-0095-AL/4	1006A050	0.54	95	9.5 kg (20.94 lb)	
NE300-4T0550G/0750P	NE-DCL-0115-AL/4	1006A051	0.45	115	11 kg (24.25 lb)	
NE300-4T0750G/0900P	NE-DCL-0160-AL/4	1006A052	0.36	160	16 kg (35.27 lb)	
NE300-4T0900G/1100P	NE-DCL-0180-AL/4	1006A053	0.33	180	16 kg (35.27 lb)	
NE300-4T1100G/1320P	NE-DCL-0250-AB/4	1006A054	0.26	250	25 kg (55.12 lb)	

10.2.3.1 Product dimension chart for DC reactor

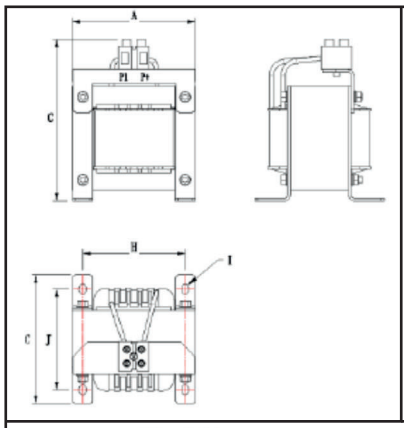

Fig.9-N

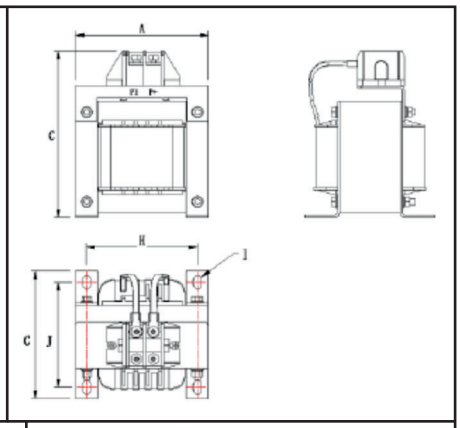

Fig.9-P

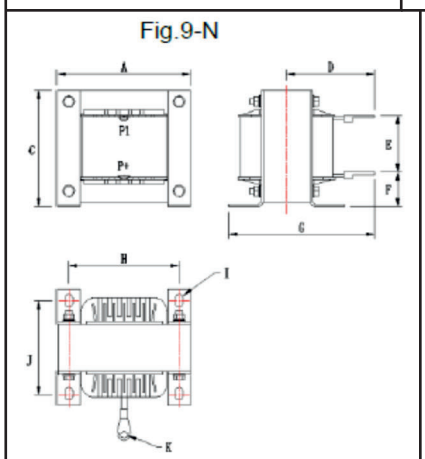

Fig.9-Q

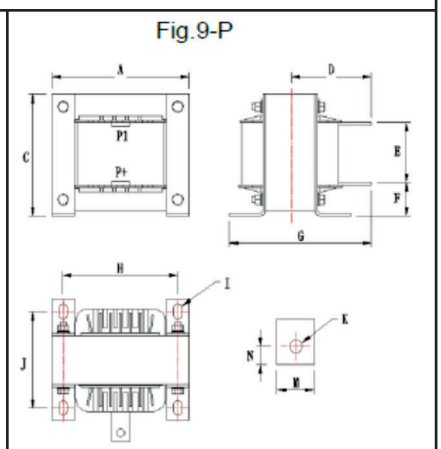

Fig.9-R

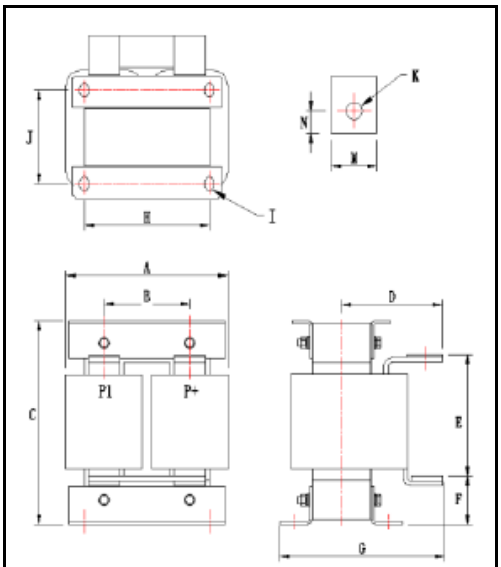

Fig. 9-S

Table 10-9 Dimension table for DC reactor

Reactor model	Rated current (A)	A mm (in)	B mm (in)	C mm (in)	D mm (in)	E mm (in)	F mm (in)	G mm (in)	H mm (in)	I (Φ)	J mm (in)	K (Φ)	L	M mm (in)	N mm (in)	Drawing no.
NE-DCL-0003-AL/4	3	57±5 (2.24)	-	85±5 (3.35)	-	-	-	88±5 (3.46)	47.5±1 (1.87)	4.5x7	68±2 (2.68)	-	-	-	-	9-N
NE-DCL-0005-AL/4	5	76±5 (2.99)	-	105±5 (4.13)	-	-	-	76±5 (2.99)	64±1 (2.52)	5x8	56±2 (2.2)	-	-	-	-	
NE-DCL-0006-AL/4	6		-		-	-	-					-	-	-	-	
NE-DCL-0010-AL/4	10		-		-	-	-	105±5 (4.13)			85±2 (3.35)	-	-	-	-	
NE-DCL-0012-AL/4	12	114±5 (4.49)	-		-	-	-					-	-	-	-	
NE-DCL-0020-AL/4	20		-	145±5 (5.71)	-	-	-	110±5 (4.33)	95±1 (3.74)	7x12	90±2 (3.54)	-	-	-	-	9-P
NE-DCL-0023-AL/4	23		-		-	-	-					-	-	-	-	
NE-DCL-0025-AL/4	25		-		-	-	-	115±5 (4.35)			95±2 (3.74)	-	-	-	-	
NE-DCL-0030-AL/4	30		-		-	-	-					-	-	-	-	
NE-DCL-0033-AL/4	33		-		-	-	-					-	-	-	-	
NE-DCL-0035-AL/4	35		-		-	-	-	110±5 (4.33)			90±2 (3.54)	-	-	-	-	
NE-DCL-0040-AL/4	40		-		-	-	-					-	-	-	-	
NE-DCL-0050-AL/4	50		-	100±5 (3.94)	105±10 (4.13)	55±5 (2.17)	32±5 (1.26)	165±10 (6.49)			105±2 (4.13)	8.3	-	-	-	9-Q
NE-DCL-0065-AL/4	65		-		110±10 (4.33)			180±10 (7.09)			120±2 (4.72)		-	-	-	
NE-DCL-0078-AL/4	78	133±5 (5.24)	-	115±5 (4.53)	120±10 (4.72)	65±5 (2.56)	35±5 (1.38)	190±1 (7.48)	111±1 (4.37)				-	-	-	
NE-DCL-0095-AL/4	95		-		130±10 (5.12)			205±10 (8.07)			135±2 (5.31)		-	-	-	
NE-DCL-0115-AL/4	115	168±5 (6.61)	-	145±5 (5.71)	115±10 (4.53)	74±5 (2.91)	37±5 (1.46)	185±10 (7.28)	140±1 (5.51)	8x14	120±2 (4.72)	11	-	30 (1.18)	15 (0.59)	9-R
NE-DCL-0160-AL/4	160		-		125±10 (4.92)			205±10 (8.07)			140±2 (5.51)		-			
NE-DCL-0180-AL/4	180		-										-			
NE-DCL-0250-AB/4	250	210max (8.27 max)	110±5 (4.33)	265max (10.43 max)	126±10 (4.96)	161±5 (6.34)	57±5 (2.24)		160±1 (6.3)	11x20	120±2 (4.72)	13	-	40 (1.57)	20 (0.79)	9-S

10.2.4 Selection table for input filter

This series of filters can meet the CE certification EN 61800-3 C3 emission requirements. The filter must be reliably grounded, and length of the connecting cable between the filter and the drive must be less than 30 cm.

Drive model	Filter model	Order number	Filter Power (kW)	Rated current (A)	Weight kg (lb)	Dimension
NE200-4T0007G/0015PB	NE-EFI-0005/4-T	1305A003	0.75-1.5	5	0.75 kg (1.65 lb)	See Table 10-10
NE200-4T0022G/0040PB	NE-EFI-0010/4-T	1305A005	2.2-37	10		
NE200-4T0040G/0055PB	NE-EFI-0015/4-T	1305A006	5.5	15	1.2 kg (2.65 lb)	
NE300-4T0055G/0075PB	NE-EFI-0016/4-T	1305A007	77.5	16		
NE300-4T0075G/0110PB	NE-EFI-0020/4-T	1305A008	11	20	2.8 kg (6.17 lb)	
NE300-4T0110G/0150PB	NE-EFI-0030/4-T	1305A009	15	30	3.0 kg (6.61 lb)	
NE300-4T0150G/0185PB	NE-EFI-0045/4-T	1305A010	18.5	45		
NE300-4T0185G/0220PB	NE-EFI-0050/4-T	1305A011	22	50		
NE300-4T0220G/0300PB	NE-EFI-0060/4-T	1305A012	30	60	4.5 kg (9.92 lb)	
NE300-4T0300G/0370P	NE-EFI-0080/4-T	1305A013	37	80		
NE300-4T0450G/0550P	NE-EFI-0100/4-T	1305A014	45	100		
NE300-4T0550G/0750P	NE-EFI-0120/4-T	1305A015	55	120		
NE300-4T0750G/0900P	NE-EFI-0150/4-T	1305A016	75	150	7.5 kg (16.53 lb)	
NE300-4T0900G/1100P	NE-EFI-0200/4-T	1305A017	90	200	8.2 kg (18.08 lb)	
NE300-4T1100G/1320P	NE-EFI-0300/4-C	1305A018	110-160	300	14.5 kg (31.97 lb)	

10.2.4.1 Dimension chart for input filter

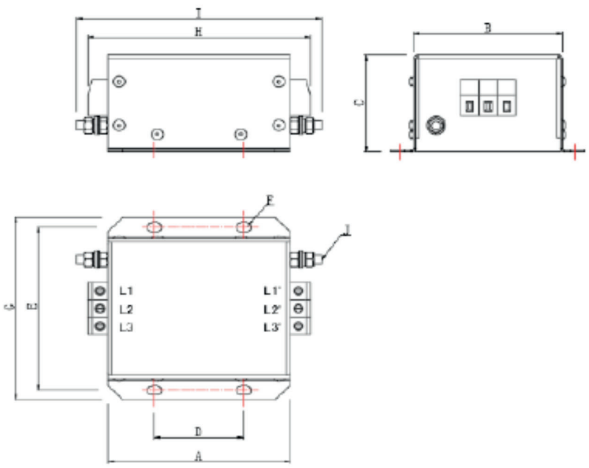

Fig.9-T

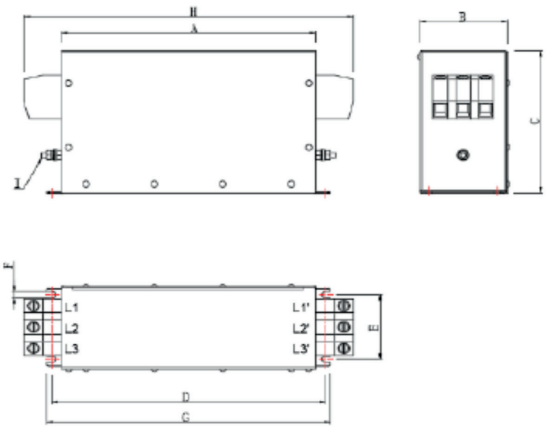

Fig.9-U

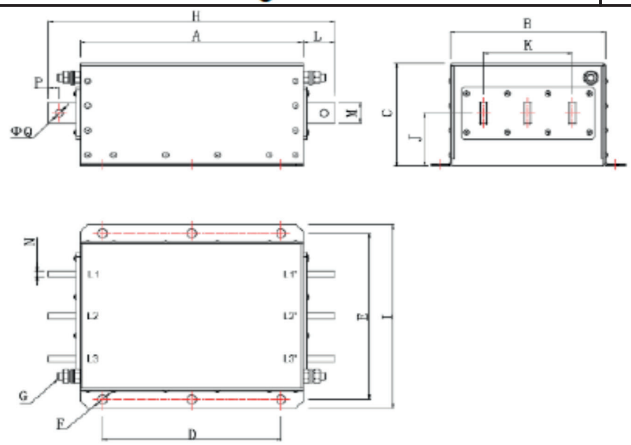

Fig.9-W

Table 10-10 Dimension table for input filter

Filter model	Rated current (A)	A mm (in)	B mm (in)	C mm (in)	D mm (in)	E mm (in)	F mm (in)	G mm (in)	H mm (in)	I (Φ)	J mm (in)	K (Φ)	L mm (in)	M mm (in)	N mm (in)	P mm (in)	Q	Drawing no.
NE-EFI-0005/4-T	5	98 (3.86)	80 (3.15)	55 (2.17)	48±0.5 (1.89)	93±0.5 (3.66)	Φ5x8	104 (4.09)	119.8±1 (4.72)	135Max (5.31Max)	M5	-	-	-	-	-	-	9-T
NE-EFI-0010/4-T	10											-	-	-	-	-	-	
NE-EFI-0015/4-T	15	130 (5.12)	82 (3.23)	60 (2.36)	51±0.5 (2.01)	95±0.5 (3.74)	Φ6x9	106 (4.17)	151.8±1 (5.98)	164Max (6.46Max)		-	-	-	-	-	-	
NE-EFI-0016/4-T	16											-	-	-	-	-	-	
NE-EFI-0020/4-T	20											-	-	-	-	-	-	
NE-EFI-0025/4-T	25											-	-	-	-	-	-	
NE-EFI-0030/4-T	30	220 (8.66)	80 (3.15)	135 (5.31)	235±0.5 (7.25)	58±0.5 (2.28)	5.5	250 (9.84)	251±2 (9.88)	M6	-	-	-	-	-	-	-	9-U
NE-EFI-0045/4-T	45										-	-	-	-	-	-	-	
NE-EFI-0050/4-T	50										-	-	-	-	-	-	-	
NE-EFI-0060/4-T	60										-	-	-	-	-	-	-	
NE-EFI-0080/4-T	80	260 (10.24)	90 (3.54)	155 (6.10)	280±0.5 (11.02)	70±0.5 (2.76)	6.5	290 (11.42)	337±2 (13.27)		-	-	-	-	-	-	-	
NE-EFI-0100/4-T	100										-	-	-	-	-	-	-	
NE-EFI-0120/4-T	120										-	-	-	-	-	-	-	
NE-EFI-0150/4-T	150	350 (13.78)	120 (4.72)	170 (6.69)	365±0.5 (14.37)	90±0.5 (3.54)		380 (14.96)	449±2 (17.68)	M10	-	-	-	-	-	-	-	
NE-EFI-0200/4-T	200										-	-	-	-	-	-	-	
NE-EFI-0250/4-C	250	300 (11.81)	210 (8.27)	145 (5.71)	240±0.5 (9.45)	235±0.5 (9.25)	Φ12	M10	386±2 (15.20)	260 (10.24)	75 (2.95)	120 (4.72)	43 (1.69)	25 (0.98)	6 (0.23)	15 (0.59)	Φ10.5	9-W
NE-EFI-0300/4-C	300																	
NE-EFI-0400/4-C	400																	
NE-EFI-0500/4-C	500													30 (1.18)	8 (0.31)			
NE-EFI-0600/4-C	600																	
NE-EFI-0800/4-C	800	350 (13.78)	230 (9.06)	170 (6.69)	290±0.5 (11.42)	255±0.5 (10.04)		M12	456±2 (17.95)	280 (11.02)	80 (3.15)		53 (2.09)	40 (1.57)	10 (0.39)	20 (0.79)	Φ14	
NE-EFI-1000/4-C	1000																	
NE-EFI-1200/4-C	1200																	

10.2.5 Selection table for output filter

Drive model	Filter model	Order number	Filter Power (kW)	Rated current (A)	Weight	Dimension
NE200-4T0007G/0015PB	NE-EFO-0005/4-T	1305A019	0.75-1.5	5	0.75 kg (1.65 l)b	See Table 10-11
NE200-4T0022G/0040PB	NE-EFO-0010/4-T	1305A020	2.2-3.7	10		
NE200-4T0040G/0055PB	NE-EFO-0016/4-T	1305A022	5.5	16	1.2 kg (2.65 lb)	
NE300-4T0055G/0075PB	NE-EFO-0016/4-T	1305A022	5.5	16		
NE300-4T0075G/0110PB	NE-EFO-0020/4-T	1305A023	7.5	20		
NE300-4T0110G/0150PB	NE-EFO-0030/4-T	1305A024	11	30	2.8 kg (6.17 lb)	
NE300-4T0150G/0185PB	NE-EFO-0045/4-T	1305A025	15	45	3.0 kg (6.61 lb)	
NE300-4T0185G/0220PB	NE-EFO-0050/4-T	1305A026	18.5	50		
NE300-4T0220G/0300PB	NE-EFO-0060/4-T	1305A027	22	60		
NE300-4T0300G/0370P	NE-EFO-0080/4-T	1305A028	37	80	4.5 kg (9.92 lb)	
NE300-4T0450G/0550P	NE-EFO-0100/4-T	1305A029	45	100		
NE300-4T0550G/0750P	NE-EFO-0120/4-T	1305A030	55	120		
NE300-4T0750G/0900P	NE-EFO-0150/4-T	1305A031	75	4150	7.5 kg (16.53 lb)	
NE300-4T0900G/1100P	NE-EFO-0200/4-T	1305A032	90	200	8.2 kg (18.08 lb)	
NE300-4T1100G/1320P	NE-EFO-0300/4-C	1305A033	110-160	300	14.5 kg (31.97 lb)	

10.2.5.1 Dimension chart for output filter

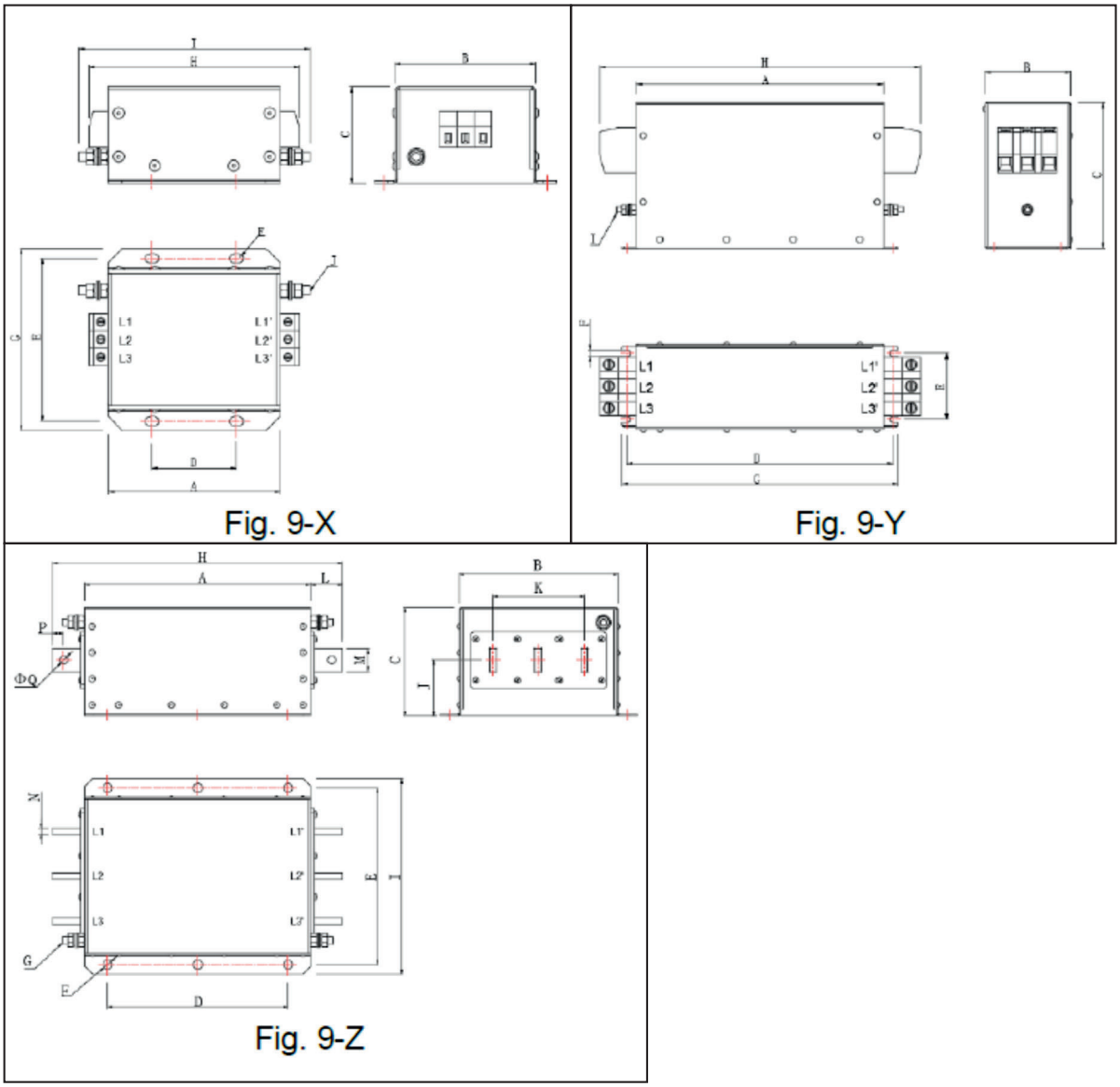

Table 10-11 Dimension table for output filter

Filter model	Rated current (A)	A mm (in)	B mm (in)	C mm (in)	D mm (in)	E mm (in)	F mm (in)	G mm (in)	H mm (in)	I (Φ) mm (in)	J mm (in)	K (Φ) mm (in)	L mm (in)	M mm (in)	N mm (in)	P mm (in)	Q mm (in)	Drawing no.
NE-EFO-0005/4-T	5	98 (3.86)	80 (3.15)	55 (2.17)	48±0.5 (1.89)	93±0.5 (3.66)	Φ5x8	104 (4.09)	119.8±1 (4.72)	135Max (5.31Max)	M5	-	-	-	-	-	-	9-X
NE-EFO-0010/4-T	10											-	-	-	-	-	-	
NE-EFO-0015/4-T	15	130 (5.12)	82 (3.23)	60 (2.36)	51±0.5 (2.01)	95±0.5 (3.74)	Φ6x9	106 (4.17)	151.8±1 (5.98)	164Max (6.46Max)		-	-	-	-	-	-	
NE-EFO-0016/4-T	16											-	-	-	-	-	-	
NE-EFO-0020/4-T	20											-	-	-	-	-	-	
NE-EFO-0025/4-T	25											-	-	-	-	-	-	
NE-EFO-0030/4-T	30	220 (8.66)	80 (3.15)	135 (5.31	235±1 (9.25)	58±1 (2.28)	5.5 (0.22)	250 (9.84)	251±2 (9.88)	M6	-	-	-	-	-	-	-	9-Y
NE-EFO-0045/4-T	45										-	-	-	-	-	-	-	
NE-EFO-0050/4-T	50										-	-	-	-	-	-	-	
NE-EFO-0060/4-T	60										-	-	-	-	-	-	-	
NE-EFO-0080/4-T	80	260 (10.23)	90 (3.54)	155 (6.10)	280±1 (11.02)	70±1 (2.76)	6.5 (0.26)	290 (11.42)	337±2 (13.27)		-	-	-	-	-	-	-	
NE-EFO-0100/4-T	100										-	-	-	-	-	-	-	
NE-EFO-0120/4-T	120										-	-	-	-	-	-	-	
NE-EFO-0150/4-T	150	350 (13.78)	120 (4.72)	170 (6.69)	365±1 (14.37)	90±1 (3.54)		380 (14.96)	449±2 (17.68)	M10	-	-	-	-	-	-	-	
NE-EFO-0200/4-T	200										-	-	-	-	-	-	-	
NE-EFO-0250/4-C	250	300 (11.81)	210 (8.27)	145 (5.71)	240±1 (9.45)	235±1 (9.25)	Φ12	M10	386±2 (15.20)	260 (10.23)	75 (2.95)	120 (4.72)	43 (1.69)	25 (0.98)	6 (0.24)	15 (0.59)	Φ10.5	9-Z
NE-EFO-0300/4-C	300																	
NE-EFO-0400/4-C	400																	
NE-EFO-0500/4-C	500													30 (1.18)	8 (0.31)			
NE-EFOI-0600/4-C	600																	
NE-EFO-0800/4-C	800	350 (13.78)	230 (9.06)	170 (6.69)	290±1 (11.42	255±1 (10.04)		M12	456±2 (17.95)	280 (11.02)	80 (3.15)		53 (2.08)	40 (1.57)	10 (0.39)	20 (0.79)	Φ14	
NE-EFO-1000/4-C	1000																	
NE-EFO-1200/4-C	1200																	

Appendix A Modbus Communication Protocol

The drive support Modbus protocol, RTU format, Broadcast address 0, slave address “1-247”. Interface mode: RS485: Asynchronous, half duplex.

NOTE

‘③’ indicates this parameter is only for NE300

Protocol Format

Start	The initial space of frame is 3.5 characters or above
Slave address	1~247
Function Code	03: Read parameters from slave 06: Write parameters to slave 08: Loopback Test
Data (N)	2×N data, this is the main content of Modbus communication.
.....	
Data (0)	
Error check	CRC check
End	The End space of frame is 3.5 characters or above

Function Code and Data

Function Code 03H: Reads parameters and status words of one parameters of the drive.

Example: Read parameter (register address: 0100H) from the slave 1, the format is as follows:

1. RTU Master Request

Slave address	01H
Function code	03H
Register address Hi	01H
Register address Lo	00H
Number of registers Hi	00H
Number of registers Lo	01H
CRC Hi	85H
CRC Lo	F6H

2. RTU Slave Response

Slave address	01H
Function code	03H
Byte Count	02H
Data Hi	00H
Data Lo	01H
CRC Hi	79H
CTC Lo	84H

Function Code 06H: Write parameters and status words of one parameters of the drive.

Example: Write parameter (F0.19 register address: 0113H) to the slave 1, the format is as follows:

3. RTU Master Request

Slave address	01H
Function code	06H
Register address Hi	01H
Register address Lo	13H
Data Hi	00H
Data Lo	64H
CRC Hi	78H
CTC Lo	18H

4. RTU Slave Response

Slave address	01H
Function code	03H
Byte Count	02H
Data Hi	00H
Data Lo	01H
CRC Hi	79H
CTC Lo	84H

Function Code 10H: Write parameters and status words of one parameters of the drive.

Example: Write parameter (F0.19 register address: 0113H) to the slave 1, the format is as follows:

5. RTU Master Request

Slave address	01H
Function code	10H
Register address Hi	01H
Register address Lo	13H
Number of registers Hi	00H
Number of registers Lo	01H
Byte Count	02H
Data Hi	00H
Data Lo	64H
CRC Hi	B5H
CTC Lo	D8H

6. RTU Slave Response

Slave address	01H
Function code	06H
Register address Hi	01H
Register address Lo	13H
Number of registers Hi	00H
Number of registers Lo	01H
CRC Hi	F1H
CTC Lo	F0H

7. Function Code 08H

The transmitted message is returned unchanged as a response message. This test is used for checking the signal communication between master and slave.

The format is as follows:

The Master Request

Slave address	01H
Function code	08H
Register address Hi	00H
Register address Lo	00H
Data Hi	12H
Data Lo	34H
CRC Hi	EDH
CTC Lo	7CH

The Slave Response

Slave address	01H
Function code	08H
Register address Hi	00H
Register address Lo	00H
Data Hi	12H
Data Lo	34H
CRC Hi	EDH
CTC Lo	7CH

8. Error code and Abnormal function code

If the operation request is rejected, the response will be error code and abnormal function code. Error function code equals to function code +0x80, abnormal code shows the error cause in detail. The format is as follows:

The slave response for the rejected request

Slave address	01H
Function code	83H
Error code	02H
CRC Hi	C0H
CRC Lo	F1H

Examples of abnormal codes

01H	Illegal function code: is not 03H,06H,10H,08H
02H	Register address error
03H	Register number error
21H	Data error: beyond data limit
22H	Error when data is written: The register is not written when the drive is running, or writing data to the only read-out register address. • Data is written during EPPROM fault. • Data is written when data is edited by keypad.
23H	Data is written when the drive is under voltage.
24H	CRC check error

Drive Register Address Distribution

The corresponding relationship between the function codes of the drive and the Modbus protocol register address. The bytes at higher orders refer to function code group number + 1, the bytes at lower orders refer to function code number, express with HEX a decimal. For example, the modbus register address of function code F0.02 is 0102H. The parameters are saved upon power failure when the highest bit of the register address is set. For example, when the register address 8012H is written, the parameter F0.02 is saved to EEPROM.

NOTE

The life of EEPROM is about 100000 times, if change setting frequency frequently, several days or several weeks may damage EEPROM, adopt write RAM, it can avoid to damage EEPROM.

1. The other parameter registers address

Function description	Register Address	Data definition and instruction	R/W
Reserved	0000H	Reserved	Reserved
Communication Run Command	0001H	0001H: Forward rotation	W
		0002H: Reverse rotation	
		0003H: Stop	
		0004H: Coast to stop	
		0005H: Fault reset	
Communication Setting	0002H	Range (-10000~10000)	W/R
		NOTE Communication Setting is percentage. (-100.00~100.00 %) When it is used to frequency setting, it's relative to the maximum frequency. When it's used to torque setting, it's relative to the 2*rated torque. When it's used to PID setting or feedback, it's relative to the analog input corresponding setup	
Reserved	0003H~001FH	Reserved	Reserved
Drive Status	0020H	Bit0---1: Run 0: Stop	R
		Bit1---1: Reverse Rotation 0: Forward Rotation	
		Bit2---1: Fault 0: No Fault	
		Bit3---1: Warning 0: No warning	
		Bit4---1: On fault reset 0: Not on fault reset	

Function description	Register Address	Data definition and instruction	R/W
Fault Content	0021H	0: NULL	R
		1: Uu1 bus Under voltage fault	
		2: OC1 over current in acceleration	
		3: OC2 over current in deceleration	
		4: OC3 over current in constant speed	
		5: Ou1 over voltage in acceleration	
		6: Ou2 over voltage in deceleration	
		7: Ou3 over voltage in constant speed	
		8: GF Ground Fault	
		9: SC Load Short-Circuit	
		10: OH1 Radiator over heat	
		11: OL1 Motor overload	
		12: OL2 Drive overload	
		13: EF0 communication fault	
		14: EF1 external terminal fault	
		15: SP1 Input phase failure or Unbalance	
		16: SPO Output phase failure or Unbalance	
		17: EEP EEPROM Fault	
		18: CCF Transmission between the drive and keypad cannot be established	
		19: bCE Brake unit fault	
		20: PCE Parameter copy Error	
		21: IDE Hall current detection fault	
		22: ECE PG fault	
		23: ③ LC Fast current limit fault	
		24: ③ EF2 Terminal closing fault	
		25: ③ PIDE PID feedback offline fault	
		26: ③ OLP2 Overload pre-alarm	
		27: InPE Initial position fault detected of synchronous motor	
		28: bAE Brake current detection fault	
Warning Content	0022H	0: No warning	R
		1: uu Bus under voltage warning	
		2: OLP2Drive overload warning	
		3: OH2Drive overheat warning	
		4: SF3Output Terminal function selection 10 not reach to 3	
Running/Stop Monitor parameters	0023H	Output frequency	R
	0024H	Frequency reference	
	0025H	Bus voltage	
	0026H	Output voltage	
	0027H	Output current	
	0028H	Rotate speed of motor	
	0029H	Output power	
	002AH	Output torque	
	002BH	PID reference	
	002CH	PID feedback	
	002DH	AI1	
	002EH	AI2	
	002FH	High pulse input	
	0030H	Terminal status	
	0031H	PLC current steps	
	0032H	Length reference	
	0033H	Actual length	
	0034H	External count	

Function description	Register Address	Data definition and instruction	R/W
Running/ Stop Monitor parameters	0035H	X1 terminal status - 0: Invalid 1: Valid	R
	0036H	X2 terminal status - 0: Invalid 1: Valid	
	0037H	X3 terminal status - 0: Invalid 1: Valid	
	0038H	X4 terminal status - 0: Invalid 1: Valid	
	0039H	X5 terminal status - 0: Invalid 1: Valid	
	003AH	X6 terminal status - 0: Invalid 1: Valid	
	003BH	X7 terminal status - 0: Invalid 1: Valid	
	003CH	X8 terminal status - 0: Invalid 1: Valid	
	003DH	Reserved	

2. NE200 Terminals status (0030H) definition.

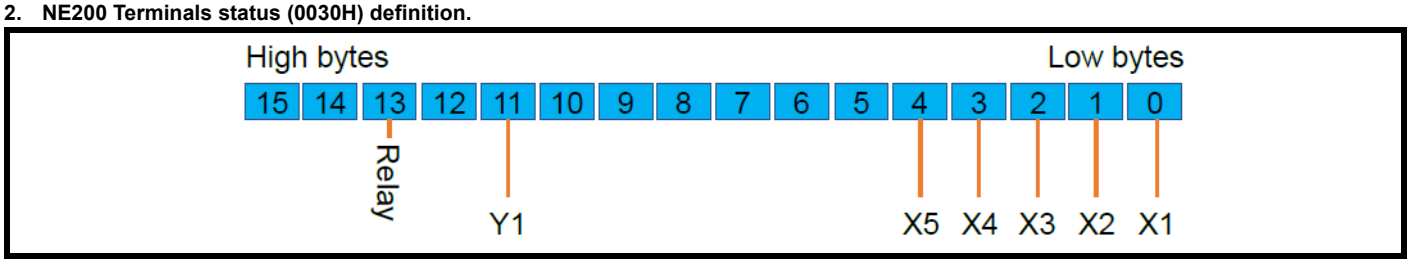

3. NE300 Terminals status (0030H) definition.

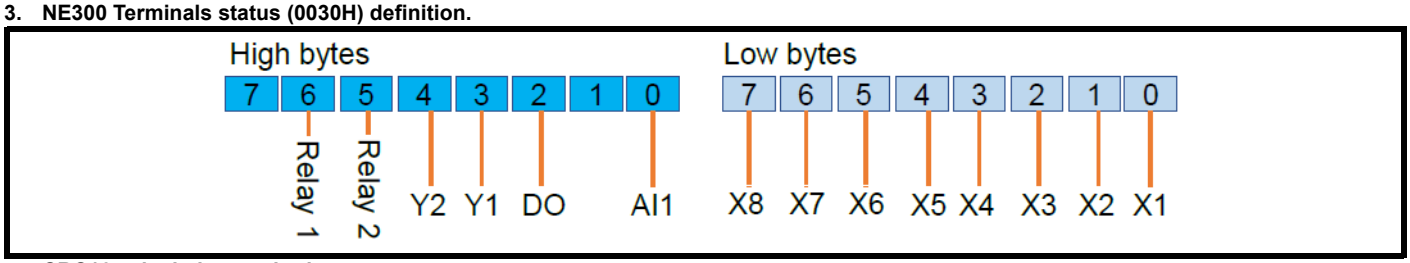

4. CRC16 calculation method

```
unsigned int  CRC16（unsigned char *data，unsigned char length）
{
int i，crc_result=0xffff；

while（length--）
{
crc_result^=*data++；  for（i=0；i<8；i++）
{
if（crc_result&0x01）  crc_result=（crc_result>>1）^0xa001；

else

}
}

crc_result=crc_result>>1；
return  （crc_result=（（crc_result&0xff）<<8）|（crc_result>>8
```

Appendix B Adapted encoder instruction

Figure B-1

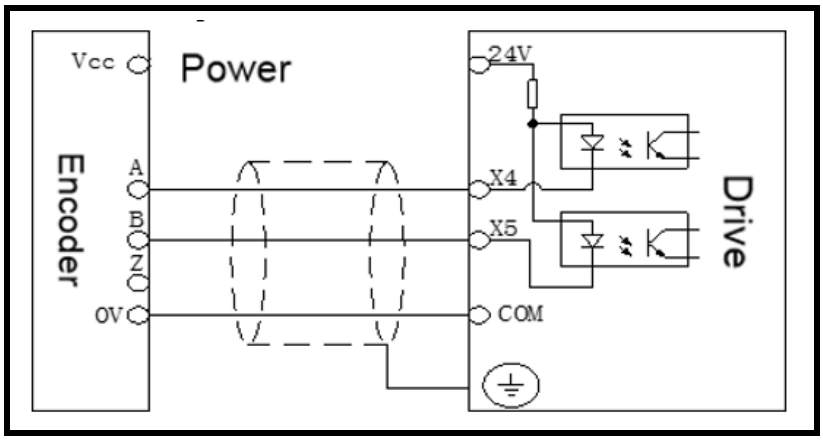

Figure B-1 is the wiring method of the collector of encoder. The encoder power supply may be the 24 V of drive while the encoder Vcc is 24 V, may use the 5~24 V power supply while using the external encoder.

Figure B-2

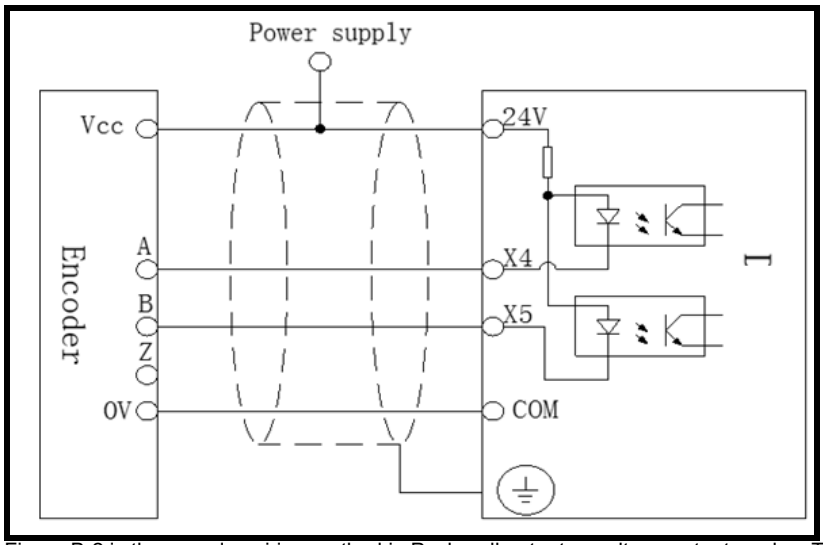

Figure B-2 is the encoder wiring method in Push-pull output or voltage output modes. The encoder power supply Vcc is 24 V and drive's 24 V is recommended.

NOTE

The above instruction is for standard inbuilt PG card, the highest pulse frequency NE300 series can take is 50 kHz.

If higher requirement closed-loop control is needed, please order extra professional PG card and its matched control board for NE300 series.

Appendix C NE300 Closed-loop Control

Attention:

“o” means the parameter can be changed during running.

“x”means the parameter cannot be changed during running;

“*” means the parameter is detected value or fixed value and not changeable.

“-” means manufacturer parameter and the users have no access to it.

Code	Description	Setting range	Default	Modify	Modbus Address
F0 Basic Function					
F0.02	Run command control mode	3: CAN	0	o	0102H
F0.03	Frequency reference1 (Freq. ref.1)	9:CAN	0	o	0103H
F0.04	Frequency reference2 (Freq. ref.2)		1	o	0104H
F1 Start and Stop					
F1.18	Rotational speed tracking direction inspection	0: Disable 1: Enable	0	o	0212H
F1.19	Rotational speed tracking direction inspection time	10~1000 ms	50 ms	o	0213H
F2 Auxiliary Running Function					
F2.23	Instant-power-failure freq. drop rate	1~800	300	o	0317H
F2.33	Threshold value of Zero Freq. running	0.00~550.0 Hz (Logic is same with EV1000/EV2000)	0.00 Hz	o	0321H
F2.34	Range between start Freq. and threshold value of Zero Freq.			o	0322H
F2.35	Synchronous motor IQ filter	0: With filter 1: Without	0	o	0323H
F2.36	Voltage modulation coefficient of synchronous motor with weak magnetic field	0.0~120.0 %	105.0 %	o	0324H
F3 Vector Control					
F3.46	Encoder Type	0: none 1: ABZ incremental encoder 2: UVW incremental encoder (Reserved) 3: Rotating transformer	0	x	042EH
F3.47	③ Number of rotating transformer poles	2~80	2	x	042FH
F3.48	③ Redundancy number of rotating transformer fault detection	0~500	200	o	0430H
F3.49	Resolver ABZ output select	0: 10 bit 1: 12 bit 2: 14 bit 3: 16 bit	1	x	0431H
F3.50	Resolver Initiation signal Freq.	2.0~20.0 kHz	10.0 kHz	x	0432H
F3.51	③ Initial Angle of synchronous motor	0.0~359.9°	0.0°	x	0433H
F3.52	③ Z-axis pulse Angle of synchronous motor	0.0~359.9°	0.0°	x	0434H
F3.53	③ Encoder mechanical Angle	0.0~359.9°	0.0°	-	0435H
F3.54	ABZ encoder location detecting While powering on initially	0: Not detecting 1: Detecting	1	x	0436H
F3.55	③ Self-learning encoder detection	Units: 0: The number of AB phase pulses is not detected 1: Detect the number of AB phase pulses Tens: 0: Encoder direction is not detected 1: Detecting encoder direction	11	x	0437H
F3.56	③ Calibration Z position	0: The Z signal does not calibrate the position 1: Z signal calibration position	1	x	0438H

Code	Description	Setting range	Default	Modify	Modbus Address
F3.57	③ Disconnection fault detection	Units: 0: Z signal break is not detected 1: Detection when Z signal breaks Tens: 0: AB phase break is not detected 1: AB phase break detection Hundreds: 0: Encoder reverse function failure is not detected 1: Detection when the encoder reverse function fails	111	x	0439H
F3.58	Stall detection	0.00~100.00 Hz	10.00 Hz	o	043AH
F3.59	③ Stall detection time	0.0~100.0s Note: 0.0 means 'No detection'	0.0 s	o	043BH
F3.60	Current Electrical angle of motor	0.0~359.9°	0.0°	-	043CH
F3.61	Status of UVW encoder (Reserved)	0~7	1	-	043DH
F3.62	Encoder and motor operating status	0: Encoder and motor in the same direction 1: Encoder and motor in reverse direction	0	-	043EH
F3.63	Count of Z signal	0~0xFFFF	0	-	043FH
F3.64	Count of ABZ encoder adjusting	0~0xFFFF	0	-	0440H
F3.65	Torque current set selection	0: Speed loop output 1: CAN communication (reserved) 2: AI1 3: AI2 4: 485 communication NOTE 1. If it is an analog quantity (AI1, AI2), the minimum and maximum values corresponding to the analog quantity need to be set to -150.0% and 150.0%, respectively. 2. When 485 communication is set, -2000~2000 corresponds to -200.0~200.0%	0	x	0441H
F6 Input terminals					
F6.00	Terminal Command mode	4: 3-wire mode 3 NOTE No.3 function: RUN, pulse signal operation. No.4 function: F/R, exchange pulse signal direction. No.5 function: HLD, hold the operation signal. HLD function don't impact the signal of direction. 5: 3-wire mode 4 NOTE No.3 function: RUN, pulse signal operation. No.4 function: F/R, the reverse signal of pulse, come back to forward only while disconnecting HLD signal. No.5 function: HLD, hold the operation signal. 56: Enable 'Motor return initial location automatically'	0	x	0700H
F6.01	X1 terminal function selection	55: Zero servo enable signal	1	x	0701H
F6.02	X2 terminal function selection		2	x	0702H
F6.03	X3 terminal function selection		8	x	0703H
F6.04	X4 terminal function selection		17	x	0704H
F6.05	X5 terminal function selection		18	x	0705H
F6.06	② AI1 terminal function selection ③ X6 terminal Function selection		0	x	0706H
F6.07	② AI2 terminal function selection ③ X7 terminal Function selection		0	x	0707H
F6.08	② Reserved ③ X8 terminal function selection		Reserved	-	0708H
F6.07	② Reserved ③ AI1 terminal function selection		Reserved	-	0709H

Code	Description	Setting range	Default	Modify	Modbus Address
F7 Output terminal					
F7.19 F7.20 F7.21	AO1/AO2/Pulse output	15: Output signal of speed loop given by Iq Range: -150.0~150.0%		o	
Fb Fixed Length					
Fb.05	③ Zero servo enable	0: invalid 1: Start when the set frequency is below zero servo frequency 2: Terminal start zero servo (can be started without running command)	0	x	0C05H
Fb.06	③ Zero servo enable starting frequency	0.00~10.00 Hz	1.00 Hz	o	0C06H
Fb.07	③ Position loop gain	0.001~10.00	1.000	o	0C07H
Fd Communication					
Fd.10	485 Terminal resistance	0: invalid 1: Valid	0	o	0E0AH
FF Running History Record					
FF.00	Fault type	CnE1: Fault is the CAN communication interrupting	-	-	1000H
FF.16	Fault code of encoder	0x0~0xFFFF	0x0	-	1010H

CAN related instructions:

The format of data sent/received by CAN ID1 is fixed as shown in the following table. When it is necessary to synchronize multiple motors, the sending time interval of the main engine needs to be reduced to increase the response speed (it is recommended to be below 1.5 ms), and the sending interval of the slave machine can be appropriately increased.

Byte0	Bit0: Running signal 1: run 0: stop Bit1: Direction signal 1: forword 0: reversal Bit2: Fault signal 1: Fault 0: normal Bit3~Bit7: reserved
Byte1 Byte2	Frequency signal: range: ~20000~20000, 20000 Corresponding maximum frequency, -20000 Corresponds to a negative maximum frequency. Attention: Byte1 is upper 8 bit, Byte2 is lower eight bit
Byte3 Byte4	Actual feedback speed: range: ~20000~20000, 20000 Corresponding maximum frequency, -20000 Corresponds to a negative maximum frequency. Attention: Byte3 is upper 8 bit, Byte4 is lower eight bit
Byte5 Byte6	Current loop Iq given signal: -8192~8192, 4096 Corresponding to the rated torque current of the motor, (the sender is the speed ring output signal). Attention: Byte5 is upper 8 bit, Byte6 is lower eight bit
Byte7	Reserved

Fault code of resolver encoder

Resolver encoder Fault code (High 8 byte)	
Bit0	Resolver fault
Bit8	Fault of the encoder direction
Bit9	Fault of AB phase interrupting
Bit10	Fault of Z phase interrupting
Bit11	Fault of WVW interrupting
Bit12	Loss speed fault
---	---
---	---
---	---

Appendix D Hazardous substance limit table for electrical and electronic products

Part Name	Hazardous substances					
	Lead (Pb)	**Mercury (Hg)**	**Cadmium (Cd)**	**Hexavalent Chromium (Cr +6)**	**Polybrominated biphenyls (PBB)**	**Polybrominated diphenyl ethers (PBDE)**
Electronics assembly	X	0	0	0	0	0
Housing assembly	0	0	0	0	0	0
Keypad Battery	0	0	0	0	0	0

This table is in accordance with the provision of SJ/T11364

O: Indicates that said hazardous substance in all of the homogeneous materials for this part is below the limit requirement of GB/T 26572

X: Indicates that said hazardous substance contained in at least one of the homogeneous materials used for this part is above the limit requirement of GB/T 26572.

All for dreams

Connect with us

www.controltechniques.com

www.kbelectronics.com

©2024 Nidec Control Techniques Limited. The information contained in this brochure is for guidance only and does not form part of any contract. The accuracy cannot be guaranteed as Nidec Control Techniques Ltd have an ongoing process of development and reserve the right to change the specification of their products without notice.

Nidec Control Techniques Limited. Registered Office: The Gro, Newtown, Powys SY16 3BE.

Registered in England and Wales. Company Reg. No. 01236886.

0478-0710-04